PM55

Automatic Precision Pocket Meter

Users Manual

- Mode d'emploi
- Bedienungshandbuch
- Manual d'Uso
- Manual de uso

PN 2153049
August 2004
2004 Meterman Test Tools.
All rights reserved. Printed in Taiwan

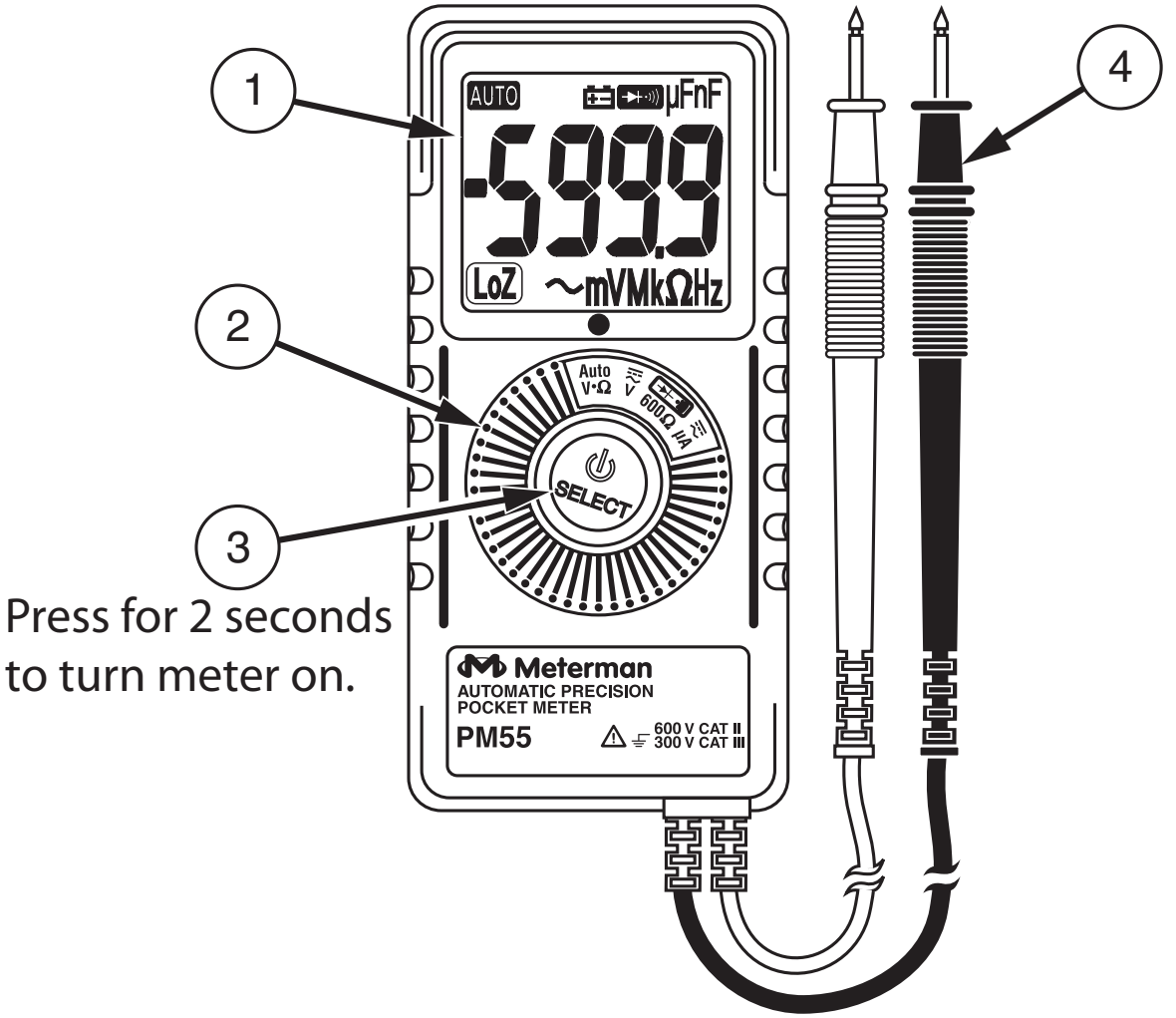

①	LCD display
②	Rotary switch to select functions and to turn the power on or off
③	SELECT-button to select alternate functions and turn the power off and on.
④	Permanently attached red test lead for positive (+) polarity and black test lead for ground reference (-)

Contents

Introduction 2
Safety Information 2
Symbols Used in this Manual 3
Turning the Meter On and Off 3
Making Measurements 4
AutoTect™ Mode 5
Continuity, Audible With Symbolic Display 5
Electric Field EF-Detection, VolTect™ 6
Voltage 8
Resistance 8
Frequency 8
Capacitance 8
V dc, V ac, and Line-Level Hz 8
Diode 9
600 Ω 9
µA dc and µA ac 9
Product Maintenance 9
Maintenance 9
Cleaning 9
Troubleshooting 10
Battery Replacement 10
Repair 11
Specifications 13

Introduction

This unique meter has a full complement of features in a package only 3/8 inch thick, weighing less than 3 oz. for the utmost in shirt-pocket portability. The PM55 is fully autoranging and has an oversized, easy-to-read digital display. With an AutoTect™ feature that enables the meter to detect and display measurements of AC Volts, DC Volts and Resistance. The PM55 offers VolTect™, a built-in non-contact voltage detection of AC voltage. Although very small, this meter is fully UL safety rated to CAT III levels and is UL listed. The Meterman PM55 precision meter includes measurement extras such as capacitance, frequency, DC microamps and safety extras such as transient protection to 4 kV and overload protection to 600 V.

Safety Information

- The PM55 Digital Multimeter is certified for cULus and EN61010-1:2001; CAT II 600 V, CAT III 300 V, class 2 and pollution deg. 2.
- This instrument is EN61010-1 certified for Installation Category II (600 V). It may only be used to make measurements on energy limited circuits within equipment and not directly connected to mains.
- This instrument is EN61010-1 certified for Installation Category III (300 V). It is recommended for use with local level power distribution, appliances, portable equipment, etc., where only smaller transient overvoltages may occur, and not for primary supply lines, overhead lines and cable systems.
- Do not exceed the maximum overload limits per function (see specifications) nor the limits marked on the instrument itself. Never apply more than 600 V between the test lead and earth ground.
- Inspect the DMM, test leads and accessories before every use. Do not use any damaged part.
- Never ground yourself when taking measurements. Do not touch exposed circuit elements or test probe tips.
- Do not operate the instrument in an explosive atmosphere.

- Exercise extreme caution when: measuring voltage >20 V // current >10 mA // AC power line with inductive loads // AC power line during electrical storms // current, when the fuse blows in a circuit with open circuit voltage > 600 V // servicing CRT equipment.
- Remove test leads from circuit before opening the case.
- Always measure current in series with the load – NEVER ACROSS a voltage source.

Symbols Used in this Manual

	Battery		Refer to the manual
	Double insulated		Dangerous Voltage
	Direct Current		Earth Ground
~	Alternating Current		Audible tone
CE	Complies with EU directives		Underwriter Laboratories, Inc.

Turning the Meter On and Off

- Press the SELECT button for approximately 2 seconds to turn the meter on.
- To turn the meter off, press the **SELECT** button until the display goes blank.

Making Measurements

All measurements described in this manual use the Red test lead for positive (+) polarity and Black test lead for Ground reference (-) unless otherwise specified

AutoTect™ mode is the default function in **Auto V.Ω** position. Press the **SELECT** button momentarily to select and step through the functions:

- AutoTect™
- Continuity
- EF
- ACV
- DCV
- Ω
- Hz
- Cx
- AutoTect™

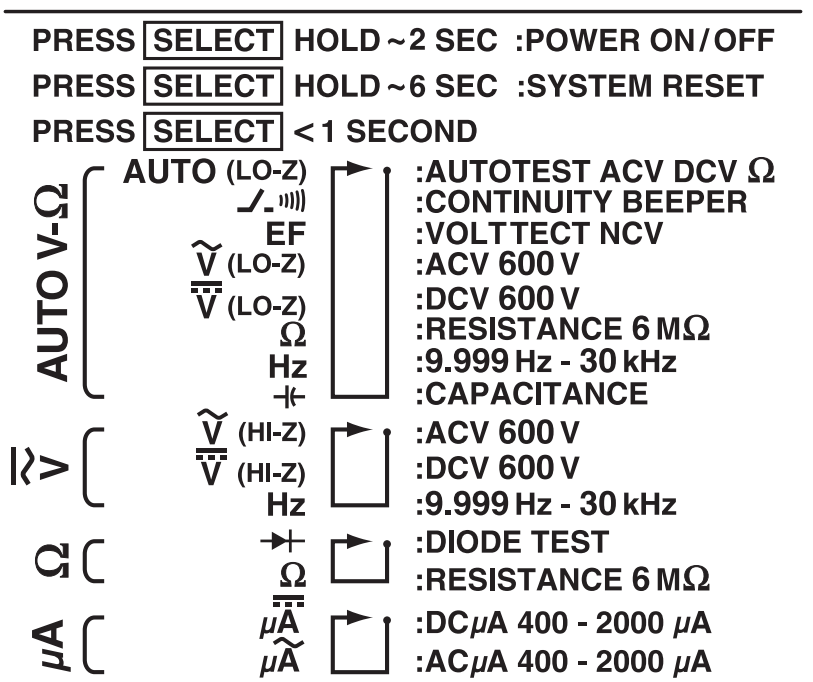

AutoTect™ Mode

This AutoTect™ feature automatically selects measurement function of V dc, V ac, or resistance based on the input via the test leads.

- With no input, the meter displays **Auto** when it is ready.
- With no voltage signal but a resistance below 6 MΩ is present, the meter displays the resistance value.
- When a signal above the threshold of 1.2 V dc or 1.5 V ac up to the rated 600 V is present, the meter displays the appropriate voltage value in dc or ac, whichever larger in peak magnitude. The ~ appears indicating ac V. The default of no icon is dc V.
- The AutoTect™test mode input impedance is lower than most digital multimeters and **LoZ** is displayed on the LCD. Switch to the manually selected V dc or V ac, if the circuit being tested is sensitive to the meter input impedance. Input impedance is approximately 900 Ω, helping determine if voltage is from leakage (so-called "ghost" voltages) or a hard connection. "Ghost" voltages will be zeroed out by the low input impedance.
- Overload-Alert Feature
  When more than 600 V is present, the meter displays **OL** with a warning beep tone. Disconnect the test leads from the signal immediately to avoid hazards.
- Range-Lock Feature
  When a measurement reading is displayed in the AutoTect™ mode, press the **SELECT** button momentarily to lock the function-range. The LCD annunciator **Auto** turns off. Range-lock can speed up repetitive measurements. Press the **SELECT** button momentarily again to return to AutoTect™ mode.
- When making resistance measurements in AutoTect™ mode, an unexpected display of voltage readings alerts you that the circuit under test is still energized.

Continuity, Audible With Symbolic Display

With **Auto** on the LCD, press the **SELECT** button once to select Continuity function. The meter will show a symbolic open-switch display - ⌊-- when it is ready. A continuous beep tone and a symbolic closed-switch ---- indicates a closed circuit. Continuity is used for checking wiring connections and operation of switches.

Electric Field EF-Detection, VolTect™

With **Auto** displayed on the LCD, press the **SELECT** button momentarily 2 times to select the EF-Detection feature. The meter displays **EF** when it is ready. Signal strength is indicated as a series of bargraph segments on the display and variable beep tones. See the VolTect™ specifications later in this manual for a complete description of the bar graph indicators.

- An antenna is located at the top left corner of the meter, which detects electric field surrounding current-carrying conductors. It is ideal for tracing live wiring connections, locating wiring breakage and to distinguish between live or earth connections.
- For more precise indication of live wires, such as distinguishing between live and ground sockets, use or V ac manual function selection for direct contact voltage measurements.

Note

For Maximum sensitivity, hold the meter away from the VolTect™ corner.

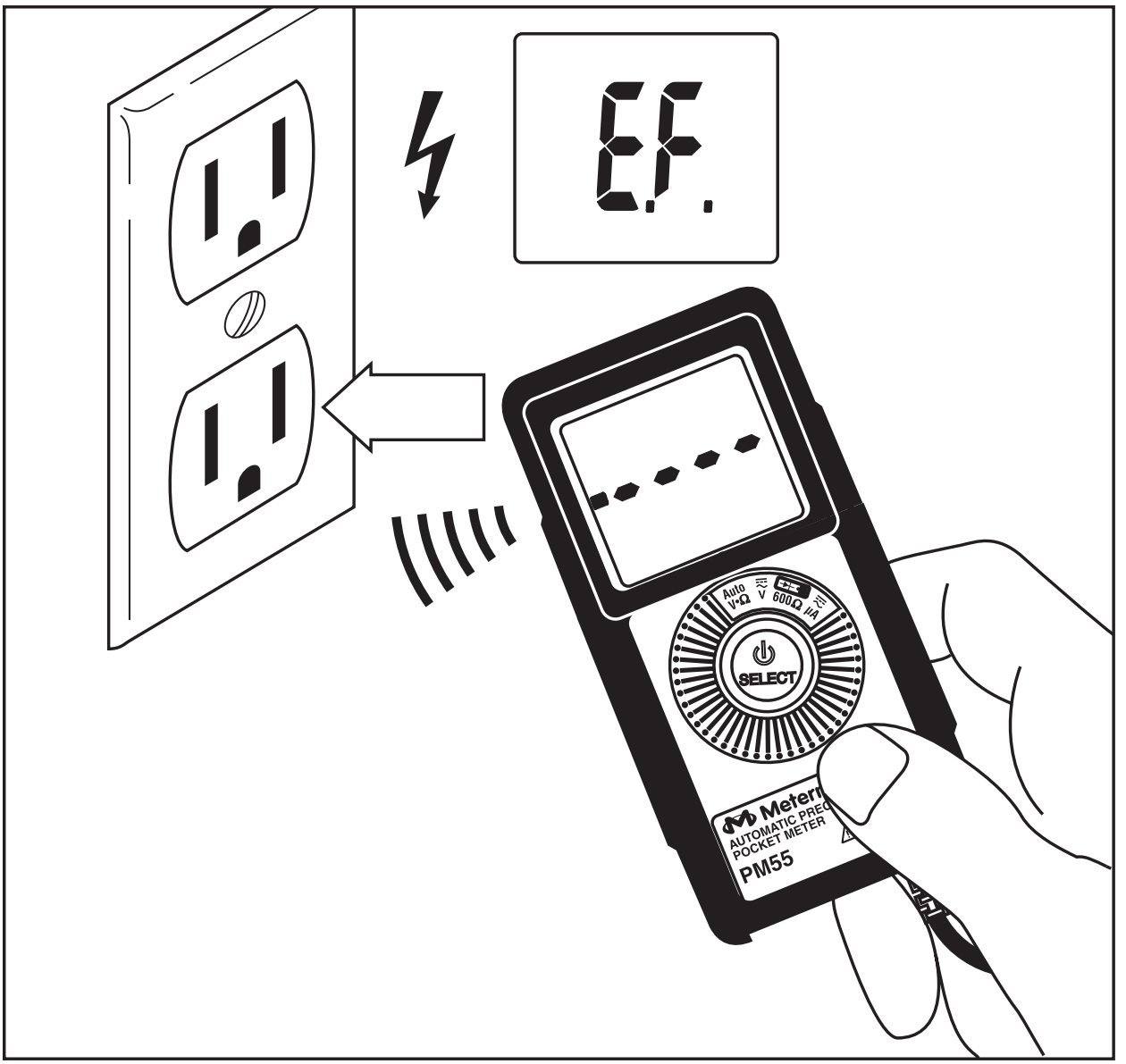

Voltage

With **Auto** on the LCD, press the **SELECT** button 3 times to select V ac function. The meter displays **LoZ∼V** when it is ready.This function is auto-ranging.

With **Auto** on the LCD, press the **SELECT** button 4 times to select V dc. The meter displays **LoZ V** when it is ready. This function is auto-ranging.

Resistance

With **Auto** on the LCD, press the **SELECT** button 5 times to select resistance function, The meter displays **MΩ** when it is ready. This function is auto-ranging.

Frequency

With **Auto** on the LCD, press the **SELECT** button 6 times to select frequency function, The meter displays **Hz** when it is ready. This function is auto-ranging.

Capacitance

With **Auto** on the LCD, press the **SELECT** button 7 times to select capacitance function, The meter displays **nF** when it is ready. This function is auto-ranging.

Return to Auto

Press the **SELECT** button 8 times to return to AutoTect™ test mode.

V dc, V ac, and Line-Level Hz

Turn the rotary switch to the V position to select common impedance **Hi-Z** voltage measurements. V dc is the default function. Press **SELECT** button momentarily to select V ac. The AC annunciator ∼ appears. Press momentarily again to select the **Line-Level Hz** function.

Line-Level Hz input sensitivity varies automatically with V ac range selected when Line-Level Hz is selected. Measuring the signal in V ac function WHILE selecting Line-Level Hz function in that V ac range automatically sets the most appropriate sensitivity for higher voltage applications. This can avoid electrical noises as in 110/220 V line voltage applications. For example, If the reading shows zero due to insufficient signal levels, select Line-Level Hz function BEFORE making measurements (at 6 V ac range) will set the highest sensitivity.

Diode

Turn the rotary selector to the ⊣▶⊢))) **/600 Ω** position. Diode test is the default function. The reading shows the approximate voltage drop across the test leads. Normal forward voltage drop (forward biased) for a good silicon diode is between 0.400 V to 0.900 V. A reading higher than that indicates a leaky diode (defective). A zero reading indicates a shorted diode (defective), and the meter will give a long beep as continuity warning. **OL** indicates an open diode (defective). Reverse the test leads connections (reverse biased) across the diode. The digital display shows **OL** if the diode is good. Any other readings indicate the diode is resistive or shorted (defective).

600 Ω

Press the **SELECT** button to select the lowest 600 Ω range for lower resistance measurements. It is an extended range to complement the AutoTect™ resistance function.

μA dc and μA ac

Turn the rotary switch to the **μA** position, μA dc is the default function. There is no annunciator for dc. Press the **SELECT** button momentarily to select **μA ac**. The ac annunciator ~ appears.

Product Maintenance

Maintenance

Do not attempt to repair this meter. It contains no user serviceable parts. Repair or servicing should only be performed by qualified personnel.

Cleaning

Periodically wipe the case with a damp cloth and mild detergent; do not use abrasives or solvents. If the meter is not to be used for periods of longer than 60 days, remove the battery and store it separately

Troubleshooting

If the instrument fails to operate, check battery, leads, and replace battery as necessary. Double-check operating procedure as described earlier in this manual.

If the display locks up, press the **SELECT** button for approximately 6 seconds to reset the microprocessor.

If the instrument voltage-resistance input is subjected to high voltage transient (mostly caused by lightning or switching surge to your system) by accident or abnormal conditions of operation, the series fusible resistors will react (become high impedance) like fuses to protect the user and the instrument. Most measuring functions through this input will then be open circuit. The series fusible resistors and the spark gaps should then be replaced by qualified technician. Refer to the LIMITED WARRANTY section for obtaining warranty or repairing service.

Battery Replacement

If the meter starts up with persistent resetting display or with low battery icon turns on, replace the battery. The meter uses one 3 V coin battery IEC-CR2032.

To replace the battery

⚠⚠WARNING

To avoid electrical shock, disconnect test leads from live circuits before opening the case. Do not operate with open case.

1. Turn off the meter.
2. Disconnect the test leads from live circuits.
3. Loosen the screwon the case bottom.
4. Lift the end of the case bottom nearest the input test leads until it unsnaps from the case top. Replace the battery cover and tighten the screw. Recycle the battery using approved methods.
5. Replace the battery. Observe battery polarities with positive (+) faces up (towards the case bottom). Replace the case bottom, and ensure that the snap on the case top (near the LCD side) is engaged.
6. Replace and tighten the screw.

Limited Warranty and Limitation of Liability

Your Meterman product will be free from defects in material and workmanship for 1 year from the date of purchase. This warranty does not cover fuses, disposable batteries or damage from accident, neglect, misuse, alteration, contamination, or abnormal conditions of operation or handling. Resellers are not authorized to extend any other warranty on Meterman's behalf. To obtain service during the warranty period, return the product with proof of purchase to an authorized Meterman Test Tools Service Center or to a Meterman dealer or distributor. See Repair Section for details. THIS WARRANTY IS YOUR ONLY REMEDY. ALL OTHER WARRANTIES - WHETHER EXPRESS, IMPLIED OR STAUTORY - INCLUDING IMPLIED WARRANTIES OF FITNESS FOR A PARTICULAR PURPOSE OR MERCHANTABILITY, ARE HEREBY DISCLAIMED. MANUFACTURER SHALL NOT BE LIABLE FOR ANY SPECIAL, INDIRECT, INCIDENTAL OR CONSEQUENTIAL DAMAGES OR LOSSES, ARISING FROM ANY CAUSE OR THEORY. Since some states or countries do not allow the exclusion or limitation of an implied warranty or of incidental or consequential damages, this limitation of liability may not apply to you.

Repair

All test tools returned for warranty or non-warranty repair or for calibration should be accompanied by the following: your name, company's name, address, telephone number, and proof of purchase. Additionally, please include a brief description of the problem or the service requested and include the test leads with the meter. Non-warranty repair or replacement charges should be remitted in the form of a check, a money order, credit card with expiration date, or a purchase order made payable to Meterman Test Tools.

In-Warranty Repairs and Replacement – All Countries

Please read the warranty statement that follows, and check your battery before requesting repair. During the warranty period any defective test tool can be returned to your Meterman Test Tools distributor for an exchange for the same or like product. Please check the "Where to Buy" section on www.metermantesttools.com for a list of distributors near you. Additionally, in the United States and Canada In-Warranty repair and replacement units can also be sent to a Meterman Test Tools Service Center (see below for address).

Non-Warranty Repairs and Replacement – US and Canada

Non-warranty repairs in the United States and Canada should be sent to a Meterman Test Tools Service Center. Call Meterman Test Tools or inquire at your point of purchase for current repair and replacement rates.

In USA	In Canada
Meterman Test Tools	Meterman Test Tools
1420 75th Street SW	400 Britannia Rd. E. Unit #1
Everett, WA 98203	Mississauga, ON L4Z 1X9
Tel: 888-993-5853	Tel: 905-890-7600
Fax: 425-446-6390	Fax: 905-890-6866

Non-Warranty Repairs and Replacement – Europe

European non-warranty units can be replaced by your Meterman Test Tools distributor for a nominal charge. Please check the "Where to Buy" section on www.metermantesttools.com for a list of distributors near you.

European Correspondence Address*
Meterman Test Tools Europe
P.O. Box 1186
5602 BD Eindhoven
The Netherlands

*(Correspondence only – no repair or replacement available from this address. European customers please contact your distributor.)

Specifications

General Specifications

Display and Update Rate: 3-5/6 digits 6000 counts; Updates 5 per second nominal

Operating Temperature: 0 °C - 40 °C

Relative Humidity: Maximum 80% R.H. up to 31 °C, decreasing linearly to 50% R.H. at 40 °C

Altitude: Operating below 2000 m

Storage Temperature: -20 °C ~ 60 °C, < 80% R.H. (with battery removed)

Temperature Coefficient: Nominal 0.15 x (specified accuracy)/ °C @ (0 °C ~ 18 °C or 28 °C ~ 40 °C), or otherwise specified

Sensing: Average sensing

Overload Protection: 600 V dc and V ac rms

Low Battery: Below approx. 2.4 V

Power Supply: 3 V standard button battery x 1 (IEC-CR2032; ANSI-NEDA-5004LC)

Power Consumption (typical): 6 mA for Voltage functions on Auto - V Ω position and 2 mA for other functions

APO Consumption (typical): 2.2 μA

APO Timing: Idle for 3 minutes

Dimension / Weight

L 113 mm x W 53 mm x H 10.2 mm / Approx. 78 gm

Special Features

AutoTect™ (Automatic V and Ω selection) and VolTect™ Electric Field Detection

Agency Approvals

Safety: Meets IEC61010-1, UL61010B-1, CAN/CSA-C22.2 No. 1010.1-92, CAT II 600 V and CAT III 300V, Pollution Degree 2, Class 2

E.M.C. Meets EN61326 (1997, 1998/A1), EN61000- 4-2 (1995), and EN61000-4-3 (1996). This product complies with requirements of the following European Community Directives: 89/ 336/ EEC (Electromagnetic Compatibility) and 73/ 23/ EEC (Low Voltage) as amended by 93/ 68/ EEC (CE Marking). However, electrical noise or intense electromagnetic fields in the vicinity of the equipment may disturb the measurement circuit. Measuring instruments will also respond to unwanted signals that may be present within the measurement circuit. Users should exercise care and take appropriate precautions to avoid misleading results when making measurements in the presence of electronic interference.

Accessories

H-PM protective holster, VC3 soft carrying pouch, battery installed, and User's manual

Electrical Specifications

(Accuracy @ 23 °C +/- 5 °C and < 75% R.H.)

RF Field @ 3 V/m: Specified accuracy + 45 d (Capacitance not specified)

DC Voltage

Range	Accuracy
6.000 V	±(0.5%+3 dgt)
60.00 V	±(1.0%+5 dgt)
450.0 V	±(1.2%+5 dgt)

Input Impedance:
AutoTect™ Lo-Z V dc: 833 kΩ (4.2 kΩ when displaying **AUTO**), 90 pF nominal
MRR: > 30dB @ 50 Hz/60 Hz
CMRR: > 100dB @ DC, 50 Hz/60 Hz; Rs=1 kΩ
V dc AutoTect™ Threshold:
> +1.2 V dc or < -0.6 V dc nominal
Hi-Z V dc only

AC Voltage

Range	Accuracy
50 Hz – 60 Hz	
6.000 V, 60.00 V, 450.0 V, 600 V	±(1.5%+5 dgt)
CMRR: > 60 dB @ dc to 60 Hz, Rs=1 kΩ Input Impedance: AutoTect™ Lo-Z V ac: 160 kΩ, 160 pF nominal Hi-Z ACV: 5MΩ, 90pF nominal ACV AutoTect™ Threshold: > 1.5 V ac (50 Hz/60 Hz) nominal	

Capacitance

Range[1]	Accuracy[2]
100.0nF, 1000nF, 10.00µF, 100.0µF[3)]	±(3.5%+6 dgt)[4]
[1)]Accuracy below 50nF is not specified [2)]Accuracies with film capacitor or better [3)]Updates > 1 minute on large values [4)]Specified with battery voltage above 2.8 V (half full battery). Accuracy decreases gradually to 12% at low battery warning voltage of approx. 2.4 V.	

Resistance

Range[1]	Accuracy[2]
600.0 Ω	±(2.0%+6 dgt)
6.000 kΩ	±(1.2%+6 dgt)
60.00 KΩ, 600.0 KΩ	±(1.0%+4 dgt)
6.000 MΩ	±(2.0%+4 dgt)

Open Circuit Voltage: 0.4VDC typical
1)AutoTect™ is for 6.000kΩ ~ 6.000MΩ ranges;
2)Add 40 dgt to specified accuracy while reading is below 20% of range

Frequency

Range[1]	Accuracy	Specified At
10.00 Hz -30.00 kHz[2]	±(0.5%+4 dgt)	< 2 0 V Sine-rms
10.00 Hz -999.9 Hz		< 600 V Sine-rms

[1] Sensitivity (Sine-rms):
Hz in Auto-VΩ position:> 3 V
[2]Line-level Hz in V position
@ 6.000 V ac range: > 3 V
@ 60.00 V ac range: > 6 V
@ 600.0 V ac range: > 60 V

DC μA Current

Range[1]	Accuracy	Burden Voltage
400.0 μA	±(1.5%+3 dgt)	6 mV/μA
2000 μA	±(1.2%+3 dgt)	6 mV/μA

AC μA Current

Range[1]	Accuracy	Burden Voltage
400.0 μA	±(2.0%+3 dgt)	6 mV/μA
2000 μA	±(1.5%+3 dgt)	6 mV/μA

Voltect™

Typical Voltage	Bar Graph Indication
20 V to 80 V	-
45 V to 125 V	- -
70 V to 215 V	- - -
120 V to 285 V	- - - -
above 170 V	- - - - -
Indication: Bar graph segments & audible beep tones proportional to field strength Detection Frequency: 50/60 Hz Detection Antenna: Top left corner of the meter	

Audible Continuity Tester (600 Ω Range)

Open Circuit Voltage: 0.4 V dc typical

Audible Threshold: >175 Ω ± 125 Ω