THIS DRAWING IS UNPUBLISHED. RELEASED FOR PUBLICATION -,- .
© COPYRIGHT - BY TYCO ELECTRONICS CORPORATION. ALL RIGHTS RESERVED.

LOC	DIST
AF	50

REVISIONS

P	LTR	DESCRIPTION	DATE	DWN	APVD
	A1	REDRAWN PER ECR 08-001774	21JAN08	JR	DD

1 CONTINUOUS STRIP ON REELS

2 0.00203 [.000080] MIN TIN PL ASTM B-545

3 WIRE SIZE IS 0.3-1.3MM2 [22-16] AWG

4 INSULATION RANGE IS 2.54-3.56 [.100-.140] DIA

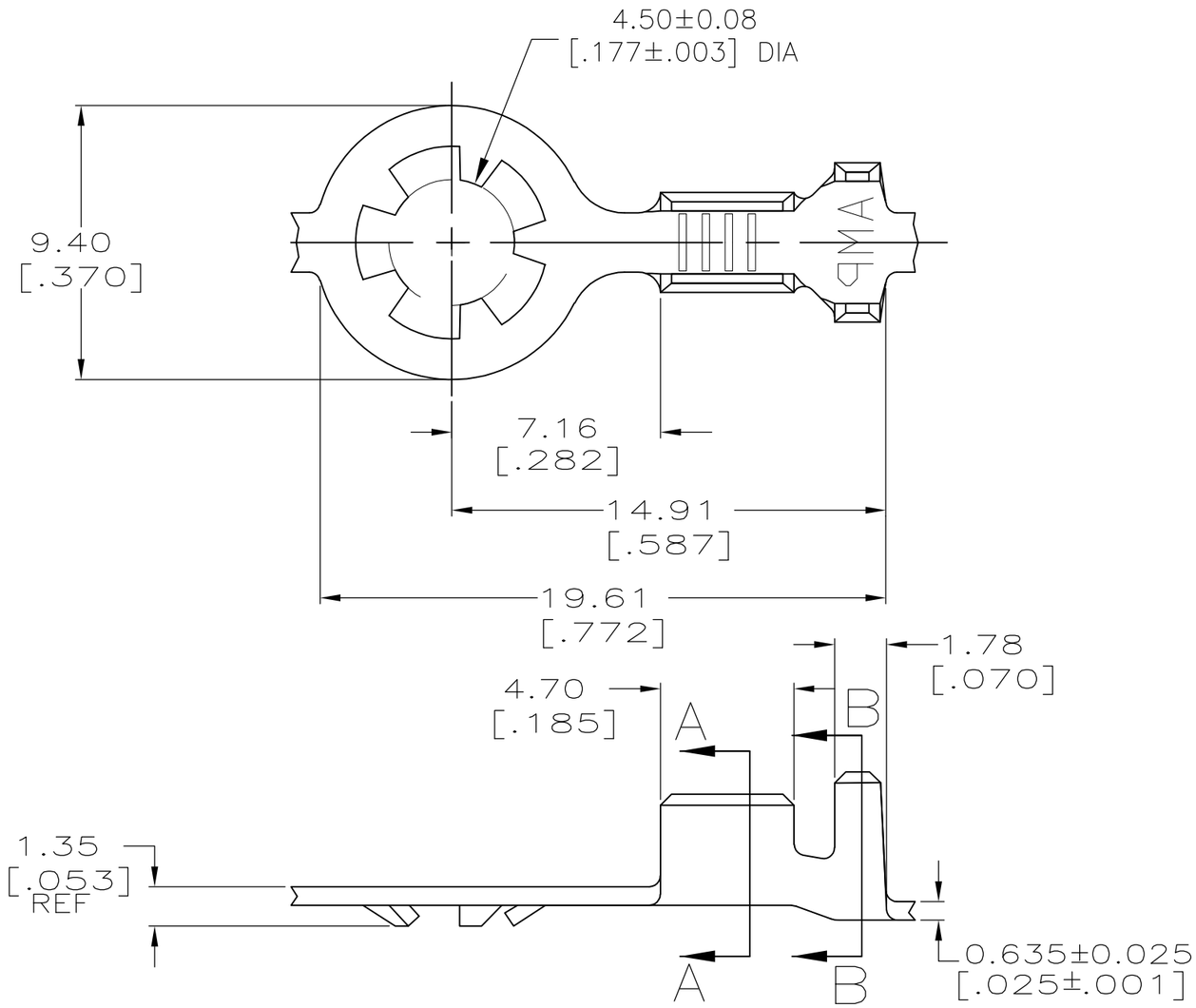

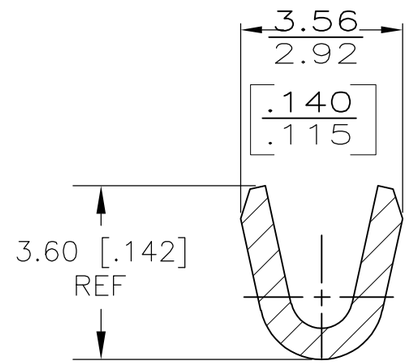

SECTION A-A
SCALE 8:1

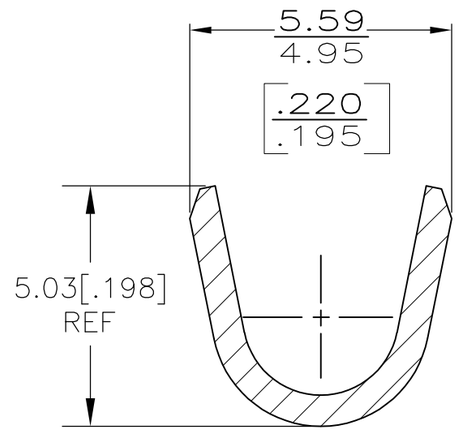

SECTION B-B
SCALE 8:1

61556-1

PART NO.

THIS DRAWING IS A CONTROLLED DOCUMENT.

DIMENSIONS: MM [INCHES]

TOLERANCES UNLESS OTHERWISE SPECIFIED:

0 PLC	± -
1 PLC	± -
2 PLC	± -
3 PLC	± 0.38 [.015]
4 PLC	± -
ANGLES	± -

MATERIAL: TEMP 3 STEEL

FINISH: TIN 2

DWN	P FORTNEY	1-18-69
CHK	RP FRANTZ	1-20-69
APVD	RP FRANTZ	1-20-69
PRODUCT SPEC	—	
APPLICATION SPEC	—	
WEIGHT	—	

Tyco Electronics

Tyco Electronics Corporation
Harrisburg, PA 17105-3608

NAME: RING

—

SIZE	CAGE CODE	DRAWING NO	RESTRICTED TO
A3	00779	C-61556	—

CUSTOMER DRAWING

SCALE	SHEET	REV
5:1	1 OF 1	A1