THIS DRAWING IS UNPUBLISHED. RELEASED FOR PUBLICATION 2007
© COPYRIGHT 2007 BY TYCO ELECTRONICS CORPORATION. ALL RIGHTS RESERVED.

| LOC | DIST |
|---|---|
| A1 | - |

REVISIONS

| F | LTR | DESCRIPTION | DATE | DWN | APVD |
|---|---|---|---|---|---|
| | A11 | Wrong notes on Table corrected | 09OCT08 | Arb | Brun |
| | A12 | 0.32±0.05 added | 02MAR09 | Mey | Brun |
| | A13 | Column Sealing plug and Text SINGLE WIRE SEAL ... added | 30JUL09 | Fru | Brun |
| | A14 | Wrong dimensions in area B5-6 corrected to H=4.6 and K=5.9 | 27JUL2010 | Kirsch | Schus |

## STRIP FORM / Bandware

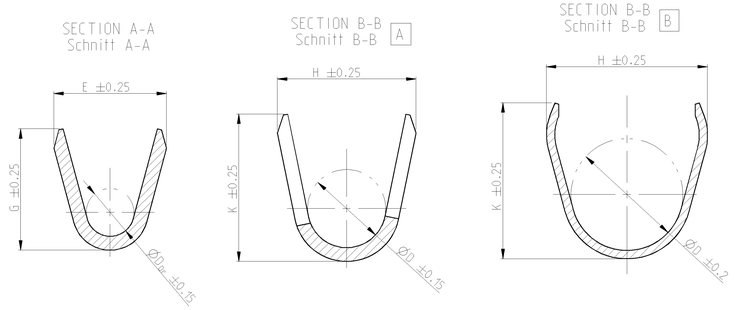


## WIRE CRIMP
## Drahtcrimp

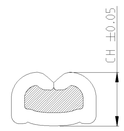


## LOOSE PIECE / Einzelausfuehrung

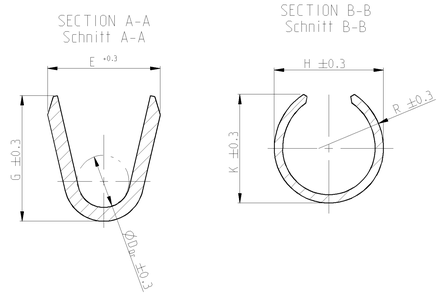


## FLR- / FLK - WIRE
## FLR- / FLK - Leitung

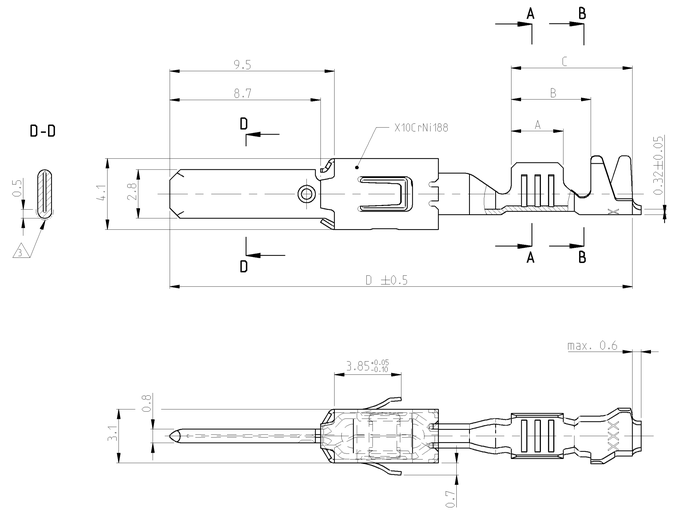


## SINGLE WIRE SEAL
## Einzeldichtungssystem

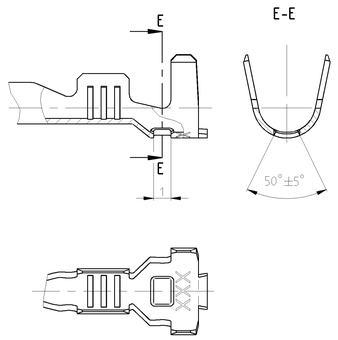


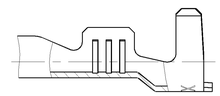

DESIGN FOR PN 968946

Ausfuehrung PN 968946

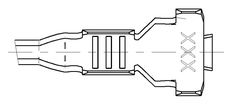

| | | | | | | | | | | | | | | | | | | | | |
|---|---|---|---|---|---|---|---|---|---|---|---|---|---|---|---|---|---|---|---|---|
| | | | | | | | | SEE / siehe SECTION A-A Schnitt A-A | SEE / siehe SECTION B-B Schnitt B-B | SEE / siehe WIRE CRIMP Drahtcrimp | SEE / siehe SECTION A-A Schnitt A-A | SEE / siehe SECTION B-B Schnitt B-B | | | | | | | | |
| SINGLE WIRE SEAL / Einzeldichtungssystem | 1-1719504-2 | A | - | CuSn4 | 1 | 12 AWG | max. 3.0 | E = 4.0<br>G = 4.2<br>$D_{Dr}$ = 2.0 | A H = 5.3<br>K = 5.0<br>D = 3.6 | AWG 12 = 2.0 | - | - | 1852291-3 | - | 3.5 | 6.0 | 7.6 | 26.8 | 5 | 828922-1 |
| | 1-1719504-1 | A | - | | 4 | | | | | | | | | | | | | | | |
| | 3-968947-1 | A | 3-968966-1 | CuSn0.20 | 1 | >2.5 - 4.0 FLR | max. 3.7 | E = 4.5<br>G = 4.7<br>$D_{Dr}$ = 2.3 | B H = 6.2<br>K = 6.0<br>D = 4.3 | 4.0 mm² = 2.25 | DIMENSION SEE STRIP FORM<br>Masse siehe Bandware | | MQC APPLICATOR<br>2-541537-2 | 539635-1<br>MATRIZE :<br>539727-2 | 4.3 | 6.0 | 8.5 | 28.5 | 828985<br>(Ø6.4)<br>6 | 828986-1 |
| | 2-968947-2 | A | 2-968966-2 | CuFe | 1 | | | | | | | | | | | | | | | |
| | 2-968947-1 | A | 2-968966-1 | | 4 | | | | | | | | | | | | | | | |
| | 1-968947-2 | A | 1-968966-2 | CuSn4 | 1 | | | | | | | | | | | | | | | |
| | 1-968947-1 | A | 1-968966-1 | | 4 | | | | | | | | | | | | | | | |
| | 2-962916-3 | E | 2-963749-3 | CuFe | 2 | >1.0 - 2.5 FLR | max. 3.0 | E = 3.6<br>G = 3.8<br>$D_{Dr}$ = 1.7 | A H = 5.3<br>K = 5.0<br>D = 3.6 | 2.5 mm² = 1.88<br>2.0 mm² = 1.73<br>1.5 mm² = 1.58 | E = 2.8<br>G = 3.9<br>$D_{Dr}$ = 1.7 | H = 4.8<br>K = 4.5<br>R = 2.8 | MQC APPLICATOR<br>2-878560-2 | 734440-1 | 3.5 | 6.0 | 7.6 | 26.8 | 828905<br>(Ø5.0) | 828922-1 |
| | 2-962916-2 | E | 2-963749-2 | | 1 | | | | | | | | | | | | | | | |
| | 2-962916-1 | E | 2-963749-1 | | 4 | | | | | | | | | | | | | | | |
| | 1-962916-3 | E | 1-963749-3 | CuSn4 | 2 | | | | | | | | | | | | | | | |
| | 1-962916-2 | E | 1-963749-2 | | 1 | | | | | | | | | | | | | | | |
| | 1-962916-1 | E | 1-963749-1 | | 4 | | | | | | | | | | | | | | | |
| | 2-962915-3 | E | 2-963748-3 | CuFe | 2 | 0.5 - 1.0 FLR | max. 2.1 | E = 2.6<br>G = 2.9<br>$D_{Dr}$ = 1.2 | A H = 5.0<br>K = 4.8<br>D = 3.3 | 1.0 mm² = 1.36<br>0.75 mm² = 1.27<br>0.5 mm² = 1.18 | E = 2.2<br>G = 2.9<br>$D_{Dr}$ = 1.1 | H = 4.6<br>K = 4.3<br>R = 2.3 | MQC APPLICATOR<br>2-878559-2 | 734438-1 | 3.0 | 5.4 | 7.0 | 26.8 | 828904<br>(Ø5.0) | |
| | 2-962915-2 | E | 2-963748-2 | | 1 | | | | | | | | | | | | | | | |
| | 2-962915-1 | E | 2-963748-1 | | 4 | | | | | | | | | | | | | | | |
| | 6-962915-6 | E | - | CuSn4 | 7 7 | | | | | | | | | | | | | | | |
| | 1-962915-3 | E | 1-963748-3 | | 2 | | | | | | | | | | | | | | | |
| | 1-962915-2 | E | 1-963748-2 | | 1 | | | | | | | | | | | | | | | |
| | 1-962915-1 | E | 1-963748-1 | | 4 | | | | | | | | | | | | | | | |
| | 1-965982-3 | A | 1-965983-3 | CuSn4 | 2 | 0.2 - 0.5 FLK | max. 2.1 | E = 2.1<br>G = 2.1<br>$D_{Dr}$ = 0.8 | A H = 4.7<br>K = 4.5<br>D = 3.2 | 0.5 mm² = 1.12<br>0.35 mm² = 1.05<br>0.2 mm² = 0.98 | E = 1.7<br>G = 2.15<br>$D_{Dr}$ = 0.8 | H = 4.2<br>K = 4.15<br>R = 2.4 | MQC APPLICATOR<br>2-878558-2 | 539635-1<br>MATRIZE :<br>539737-2 | 2.5 | 4.9 | 6.5 | 26.8 | 828904<br>(Ø5.0) | |
| | 1-965982-1 | A | 1-965983-1 | | 4 | | | | | | | | | | | | | | | |
| UNSEALED / ungedichtet | 2-962843-3 | C | 2-963747-3 | CuFe | 2 | >1.0 - 2.5 FLK | 2.4 - 3.7 | E = 3.6<br>G = 3.8<br>$D_{Dr}$ = 1.7 | A H = 5.5<br>K = 5.7<br>D = 3.2 | 2.5 mm² = 1.88<br>1.5 mm² = 1.58 | E = 2.8<br>G = 3.9<br>$D_{Dr}$ = 1.7 | H = 4.2<br>K = 5.1<br>R = 2.4 | MQC APPLICATOR<br>2-878552-2 | 734417-3 | 3.6 | 5.2 | 8.9 | 28.6 | | |
| | 2-962843-2 | C | 2-963747-2 | | 1 | | | | | | | | | | | | | | | |
| | 2-962843-1 | C | 2-963747-1 | | 4 | | | | | | | | | | | | | | | |
| | 1-962843-3 | C | 1-963747-3 | CuSn4 | 2 | | | | | | | | | | | | | | | |
| | 1-962843-2 | C | 1-963747-2 | | 1 | | | | | | | | | | | | | | | |
| | 1-962843-1 | C | 1-963747-1 | | 4 | | | | | | | | | | | | | | | |
| | 3-968946-1 | A | 3-968965-1 | CuSn0.20 | 1 | >2.5 - 4.0 FLR | 2.7 - 3.7 | E = 4.5<br>G = 4.7<br>$D_{Dr}$ = 2.3 | A H = 5.7<br>K = 5.9<br>D = 3.3 | 4.0 mm² = 2.25 | E = 3.4<br>G = 4.7<br>$D_{Dr}$ = 2.3 | H = 4.6<br>K = 5.1<br>R = 2.6 | MQC APPLICATOR<br>2-541534-2 | 539635-1<br>MATRIZE :<br>539723-2 | 4.3 | 6.6 | 8.5 | 28.5 | | |
| | 2-968946-2 | A | 2-968965-2 | CuFe | 1 | | | | | | | | | | | | | | | |
| | 2-968946-1 | A | 2-968965-1 | | 4 | | | | | | | | | | | | | | | |
| | 1-968946-2 | A | 1-968965-2 | CuSn4 | 1 | | | | | | | | | | | | | | | |
| | 1-968946-1 | A | 1-968965-1 | | 4 | | | | | | | | | | | | | | | |
| | 2-962842-3 | E | 2-963746-3 | CuFe | 2 | >1.0 - 2.5 FLR | 2.1 - 2.9 | E = 3.6<br>G = 3.8<br>$D_{Dr}$ = 1.7 | A H = 4.3<br>K = 4.5<br>D = 2.6 | 2.5 mm² = 1.88<br>2.0 mm² = 1.73<br>1.5 mm² = 1.58 | E = 2.8<br>G = 3.9<br>$D_{Dr}$ = 1.7 | H = 3.6<br>K = 4.1<br>R = 2.1 | MQC APPLICATOR<br>2-878551-2 | 734417-2 | 3.6 | 5.2 | 8.2 | 27.9 | | |
| | 2-962842-2 | E | 2-963746-2 | | 1 | | | | | | | | | | | | | | | |
| | 2-962842-1 | E | 2-963746-1 | | 4 | | | | | | | | | | | | | | | |
| | 1-962842-3 | E | 1-963746-3 | CuSn4 | 2 | | | | | | | | | | | | | | | |
| | 1-962842-2 | E | 1-963746-2 | | 1 | | | | | | | | | | | | | | | |
| | 1-962842-1 | E | 1-963746-1 | | 4 | | | | | | | | | | | | | | | |
| | 2-962841-3 | F | 2-963745-3 | CuFe | 2 | 0.5 - 1.0 FLR | 1.4 - 2.1 | E = 2.5<br>G = 2.8<br>$D_{Dr}$ = 1.1 | A H = 3.2<br>K = 3.4<br>D = 1.8 | 1.0 mm² = 1.36<br>0.75 mm² = 1.27<br>0.5 mm² = 1.18 | E = 2.2<br>G = 2.8<br>$D_{Dr}$ = 1.1 | H = 2.8<br>K = 3.0<br>R = 1.6 | MQC APPLICATOR<br>2-878550-2 | 734417-1 | 3.0 | 4.6 | 7.0 | 26.7 | | |
| | 2-962841-2 | F | 2-963745-2 | | 1 | | | | | | | | | | | | | | | |
| | 2-962841-1 | F | 2-962841-1 | | 4 | | | | | | | | | | | | | | | |
| | 1-962841-3 | F | 1-963745-3 | CuSn4 | 2 | | | | | | | | | | | | | | | |
| | 1-962841-2 | F | 1-963745-2 | | 1 | | | | | | | | | | | | | | | |
| | 1-962841-1 | F | 1-963745-1 | | 4 | | | | | | | | | | | | | | | |
| | 2-963860-3 | B | 2-963861-3 | CuFe | 2 | 0.2 - 0.5 FLR | 1.3 - 1.6 | E = 2.1<br>G = 2.1<br>$D_{Dr}$ = 0.8 | A H = 2.9<br>K = 2.9<br>D = 1.4 | 0.5 mm² = 1.12<br>0.35 mm² = 1.05<br>0.2 mm² = 0.98 | E = 1.7<br>G = 2.1<br>$D_{Dr}$ = 0.8 | H = 2.5<br>K = 2.5<br>R = 1.4 | MQC APPLICATOR<br>2-878549-2 | 734538-1 | 2.5 | 3.7 | 5.8 | 25.5 | | |
| | 2-963860-2 | B | 2-963861-2 | | 1 | | | | | | | | | | | | | | | |
| | 2-963860-1 | B | 2-963861-1 | | 4 | | | | | | | | | | | | | | | |
| | 1-963860-3 | B | 1-963861-3 | CuSn4 | 2 | | | | | | | | | | | | | | | |
| | 1-963860-2 | B | 1-963861-2 | | 1 | | | | | | | | | | | | | | | |
| | 1-963860-1 | B | 1-963861-1 | | 4 | | | | | | | | | | | | | | | |
| | TE ORDER-NO. STRIPFORM Bandware | REV | TE ORDER-NO LOOSE PIECE Einzelausfuehrung | MATERIAL Werkstoff | SURFACE Oberflaeche | DGB mm² | INSULATIONØ Isolationsø mm | STRIP FORM WIRE CRIMP Drahtcrimp / INSUL. CRIMP Isolationscrimp Bandware | | WIRE CRIMP HEIGTH CH Drahtcrimphoehe CH | LOOSE PIECE WIRE CRIMP Drahtcrimp / INSUL. CRIMP Isolationscrimp Einzelausfuehrung | | APPLICATION TOOL Anschlagwerkzeug | HAND TOOL Handzange | A | B | C | D | TE ORDER-NO. SINGLE WIRE SEAL Einzeldichtungssystem (CAVITY DIAMETER) (Kammerdurchmesser) | TE ORDER-NO. SEALING PLUG Blindstopfen |
| | | | | | | | | CRIMP DIMENSION mm<br>Crimpabmessungen mm | | | | | EXTRACTION TOOL<br>Ausdrueckwerkzeug<br>No. 968107-1 | | | | | | | |

NOTES
Bemerkungen

1. CONTACT AREA PRE SILVER MIN. 3 µm
CANTILEVER SPRING PLAIN
Kontaktzone vorversilbert min. 3 µm
Ueberfeder blank

2. CONTACT BODY Ni-PLATING MIM. 0.5 µm; CONTACT AREA PRE-GOLD MIN. 0.6 µm
OVER NICKEL; CRIMP AREA PRE-TIN
CANTILEVER SPRING PLAIN
Kontaktkoerper vernickelt min. 0.5 µm; Kontaktzone vorvergoldet min. 0.6 µm ueber Nickel
Crimpzone vorverzinnt; Ueberfeder blank

3. _ _ . _ _ . _ _ IN THIS AREA CRACK SHAPING AT THE SURFACE PERMISSIBLE
In diesem Bereich Rissbildung in der Oberflaeche zulaessig

4. PRE-TIN MIN. 1 µm; CANTILEVER SPRING PLAIN
vorverzinnt min. 1 µm; Ueberfeder blank

5. AWG 12 TXL 828905-1 OR / oder 282536-1
AWG 12 GXL 638865-1

6. ATTENTION! CONSTRUCTION OF THE CONTACT CAVITY IN THE AREA
OF THE SINGLE WIRE SEAL IS Ø6.4 +0.1 -0.05
Achtung! Die Kammer ist im Bereich der Einzeldichtung
auf Ø6.4 +0.1 -0.05 auszulegen

7. PUNCHED WITH VOLATILIZING STAMPING-OIL
Gestanzt mit verfluechtigendem Stanzoel

THIS DRAWING IS A CONFIDENTIAL DOCUMENT. NEITHER IT NOR THE INFORMATION IT CONTAINS MAY BE COPIED OR MADE AVAILABLE TO THIRD PARTIES WITHOUT WRITTEN CONSENT OF TYCO ELECTRONICS CORPORATION. SHOULD BE CONTACTED FOR THE LATEST REVISION.

DWN K.Gerlach 14JUN99
CHK M.Bleicher
APVD -

DIMENSIONS: mm
TOLERANCES UNLESS OTHERWISE SPECIFIED:
0 PLC ±
1 PLC ±0.2
2 PLC ±
3 PLC ±
4 PLC ±
ANGLES ±1.5°
MATERIAL -
FINISH -

Tyco Electronics
Tyco Electronics AMP GmbH
64625 Bensheim (Germany)

NAME PRODUCT GROUP DRAWING FOR TAB 2.8x0.8
Produktgruppenzeichnung fuer Flachstecker 2.8x0.8

PRODUCT SPEC 108-18063
APPLICATION SPEC 114-18051
WEIGHT -

SIZE A0 | CHGE CODE 00779 | DRAWING NO C- 1355052 | RESTRICTED TO -

CUSTOMER DRAWING | SCALE 8:1 | SHEET 1 OF 1 | REV A14