Product datasheet

Specifications

Pilot light, Harmony XB5, grey plastic, white, 22mm, universal LED, plain lens, 24V AC DC, compact push in terminals

XB5AVB15

Important message: A change in appearance may be noted on the product but does not affect its use in terms of function and safety. This makes it compatible with our Universal LED blocks
EAN Code: 3606486341438

Main

Range of product	Harmony XB5
Product or component type	Pilot light
Device short name	XB5
Bezel material	Dark grey plastic
Fixing collar material	Plastic
Head type	Standard
Mounting diameter	22.5 mm
Sale per indivisible quantity	1
Shape of signaling unit head	Round
Cap/operator or lens colour	White
Operator additional information	With plain lens
Light source	Universal LED
Bulb base	Integral LED
Light source colour	White
[Us] rated supply voltage	24 V AC/DC at 50/60 Hz
Device presentation	Complete product

Complementary

Height	42 mm
Width	30 mm
Depth	45.2 mm
Terminals description ISO n°1	(X1-X2)PL
Net weight	0.034 kg
Resistance to high pressure washer	7000000 Pa at 55 °C, distance : 0.1 m
Connections - terminals	Push-in, <= 2 x 1.5 mm² with wire end ferrule conforming to IEC 60947-1 Push-in, >= 1 x 0.34 mm² without wire end ferrule conforming to IEC 60947-1
[Ui] rated insulation voltage	300 V (pollution degree 3) conforming to IEC 60947-1
[Uimp] rated impulse withstand voltage	4 kV conforming to IEC 60947-1
Signalling type	Steady

Disclaimer: This documentation is not intended as a substitute for and is not to be used for determining suitability or reliability of these products for specific user applications

GCR BRIDGE	XB5AVCUST03
Compatibility code	XB5
Supply voltage limits	20.4…26.4 V DC 20.4…26.4 V AC
Current consumption	15 mA
Service life	100000 h at rated voltage and 25 °C
Surge withstand	1 kV conforming to IEC 61000-4-5

Environment

Protective treatment	TH
Ambient air temperature for storage	-40…70 °C
Ambient air temperature for operation	-40…70 °C
Overvoltage category	Class II conforming to IEC 60536
IP degree of protection	IP66 conforming to IEC 60529 IP67 conforming to IEC 60529 IP69 conforming to IEC 60529 IP69K conforming to ISO 20653
NEMA degree of protection	NEMA 13 NEMA 4X
IK degree of protection	IK05 conforming to IEC 50102
Standards	IEC 60947-1 IEC 60947-5-1 IEC 60947-5-4 IEC 60947-5-5 UL 60947-1 UL 60947-5-1 UL 60947-5-5 UL 1059 UL 486E CSA C22.2 No 60947-1 CSA C22.2 No 60947-5-1 CSA C22.2 No 158 CSA C22.2 No 65 IACS E10
Product certifications	EAC IECEE CB Scheme CCC UL CSA
Vibration resistance	5 gn (f= 10…500 Hz) conforming to IEC 60068-2-6 25 mm peak to peak (f= 2…10 Hz) conforming to IEC 60068-2-6
Shock resistance	25 gn (duration = 6 ms) for 1000 shocks on each axis conforming to IEC 60068-2-27 30 gn (duration = 18 ms) for half sine wave acceleration conforming to IEC 60068-2-27 50 gn (duration = 11 ms) for half sine wave acceleration conforming to IEC 60068-2-27
Resistance to fast transients	2 kV conforming to IEC 61000-4-4
Resistance to electromagnetic fields	10 V/m conforming to IEC 61000-4-3
Electromagnetic compatibility	Electrostatic discharge - test level: 4 kV (on contact (on metal parts)) conforming to IEC 61000-4-2 Electrostatic discharge - test level: 8 kV (in free air (in insulating parts)) conforming to IEC 61000-4-2 Electromagnetic emission class B conforming to IEC 55011
Resistance to electrostatic discharge	4 kV on contact (on metal parts) conforming to IEC 61000-4-2 8 kV in free air (in insulating parts) conforming to IEC 61000-4-2
Electromagnetic emission	Class B conforming to IEC 55011

Packing Units

Unit Type of Package 1	PCE
Number of Units in Package 1	1
Package 1 Height	5.2 cm
Package 1 Width	3.3 cm
Package 1 Length	8.6 cm
Package 1 Weight	34 g

Contractual warranty

Warranty (in months)	18

Environmental Data

Schneider Electric aims to achieve Net Zero status by 2050 through supply chain partnerships, lower impact materials, and circularity via our ongoing “Use Better, Use Longer, Use Again” campaign to extend product lifetimes and recyclability.

Environmental Data explained >

How we assess product sustainability >

Environmental footprint

Total lifecycle Carbon footprint	7
Environmental Disclosure	Product Environmental Profile

Use Better

Materials and Substances

Packaging made with recycled cardboard	No
Packaging without single use plastic	No
EU RoHS Directive	Compliant with Exemptions
SCIP Number	3d14fd98-3859-4733-a5ee-a3016769973c
REACh Regulation	REACh Declaration

Use Longer

Lifetime extension

Repair	No

Use Again

Repack and remanufacture

End of life manual availability	End of Life Information
Take-back	No
WEEE Label	The product must be disposed on European Union markets following specific waste collection and never end up in rubbish bins

Dimensions Drawings

Dimensions

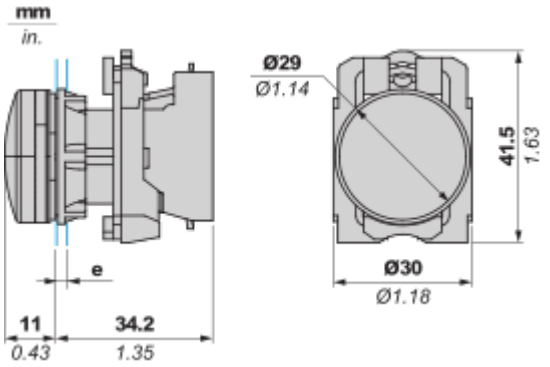

e : Clamping thickness: 1 to 6 mm / 0.04 to 0.24 in.

Mounting and Clearance

Mounting

Mounting and Unmounting

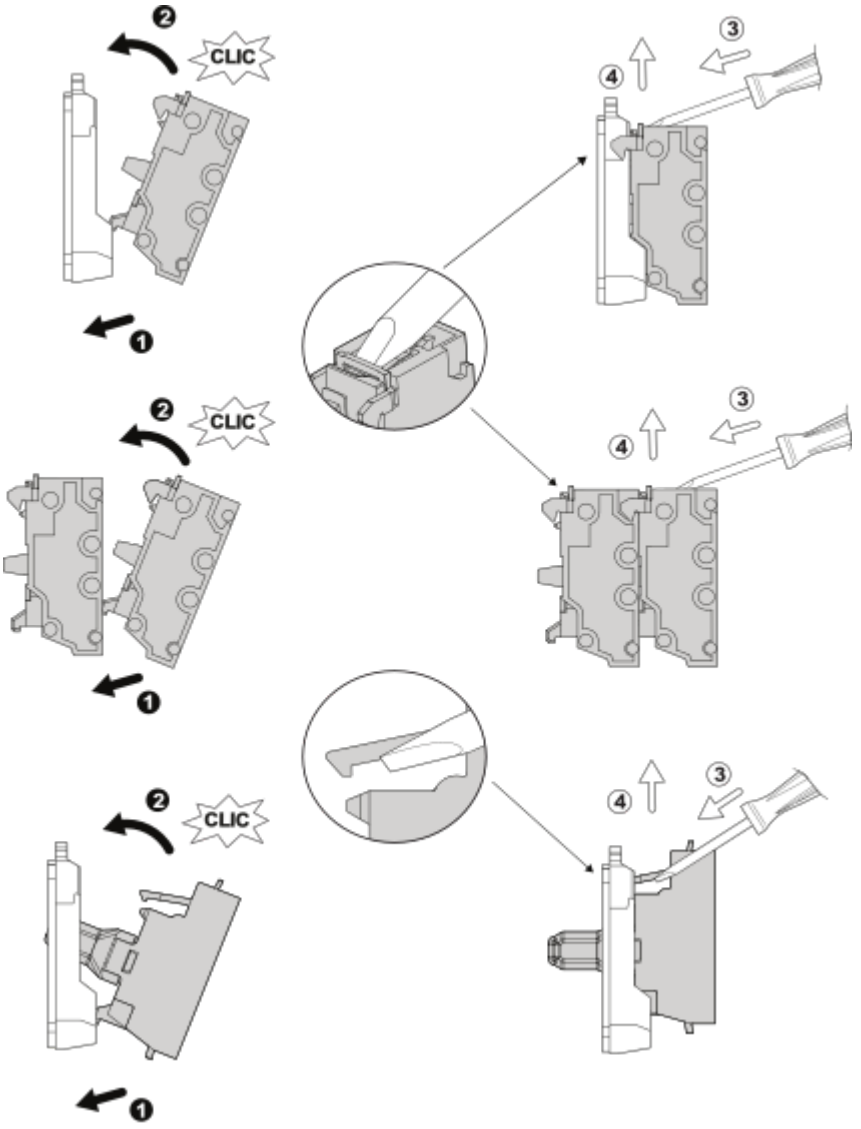

Panel cut-out Dimension

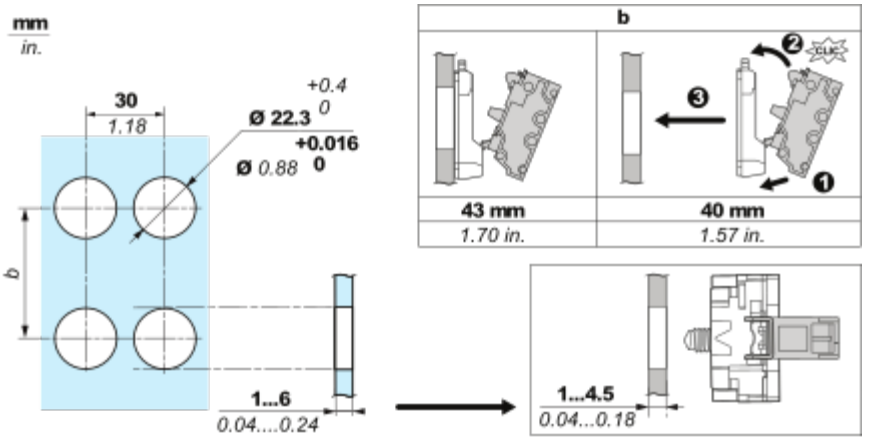
mm
in.
30
1.18
Ø 22.3 +0.4 0
Ø 0.88 +0.016 0
b
1...6
0.04....0.24
b
43 mm
1.70 in.
40 mm
1.57 in.
1...4.5
0.04...0.18

Connections and Schema

Wiring

Wiring and Unwiring

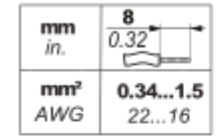

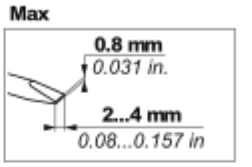

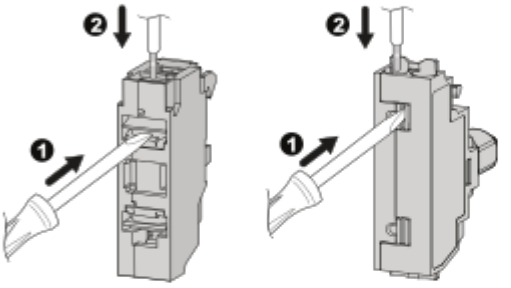

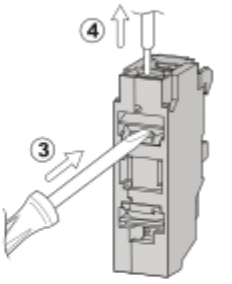

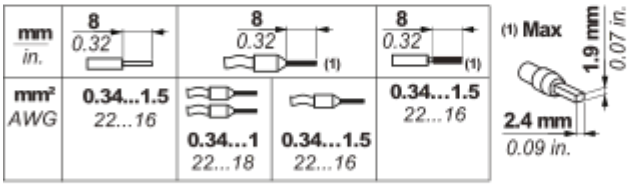

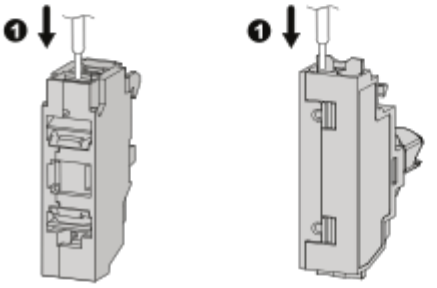

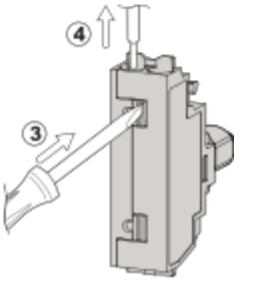

Technical Illustration

Dimensions

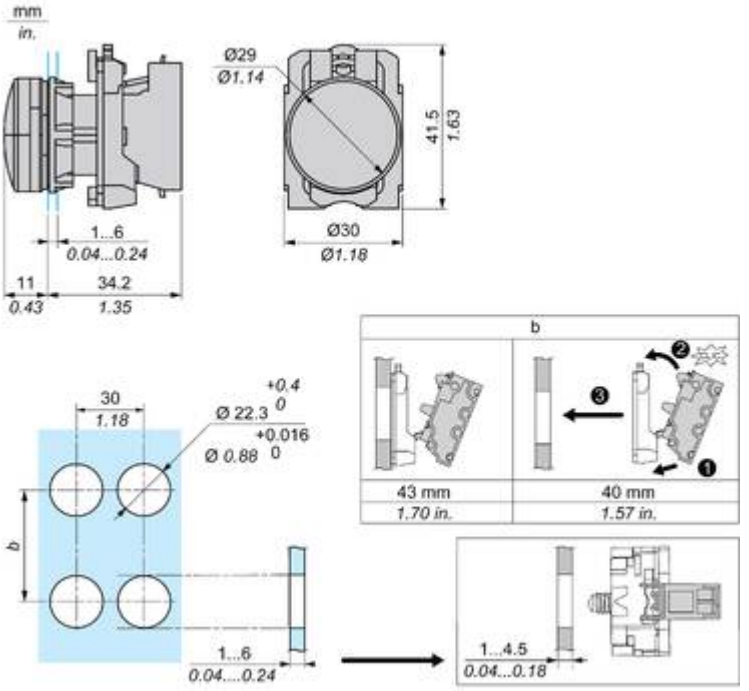

Technical Illustration

Wiring diagram

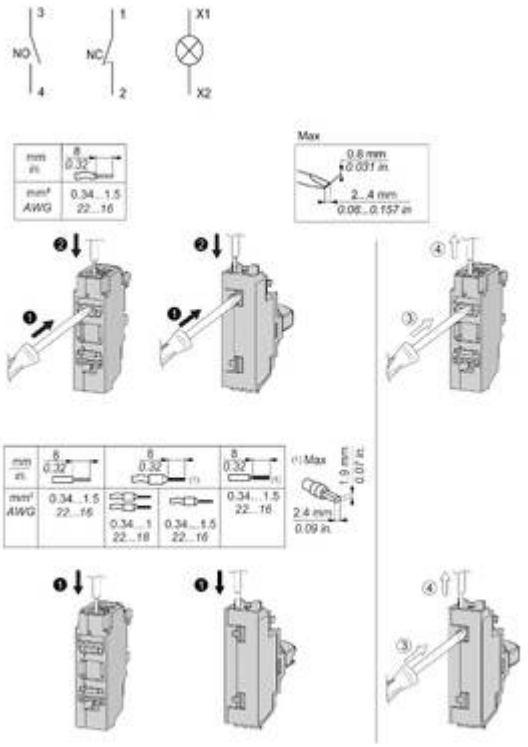

Image of product / Alternate images

Alternative

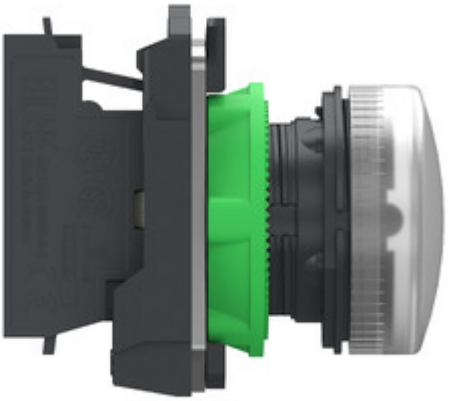

X1
UN
X2

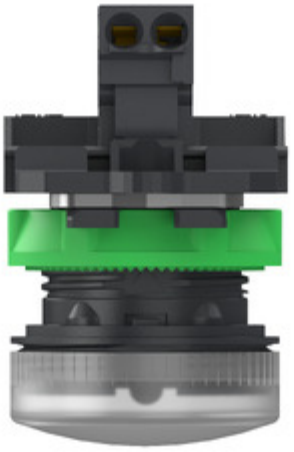
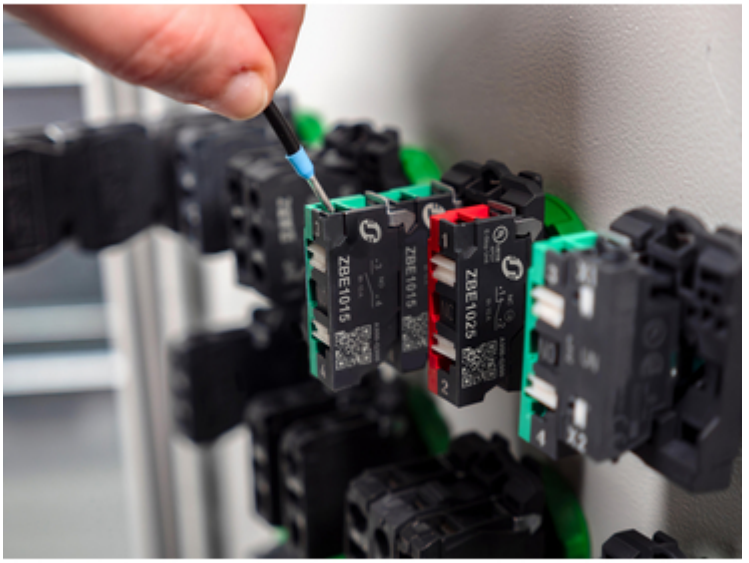
Image of product in real life situation