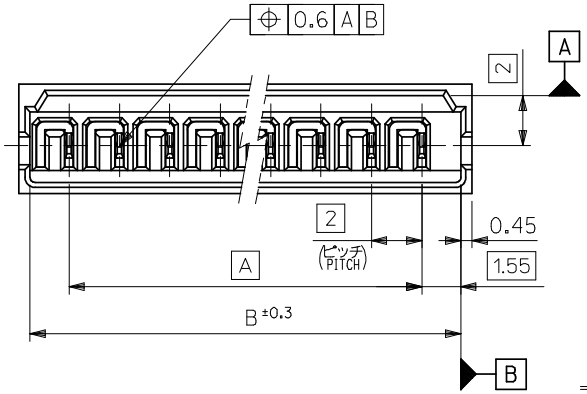

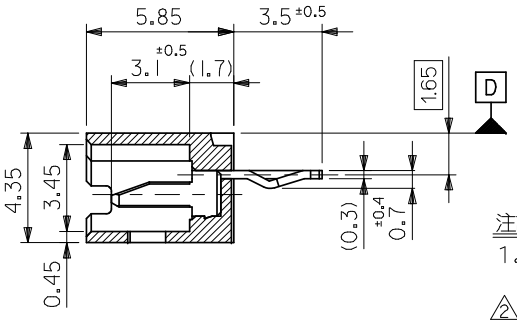

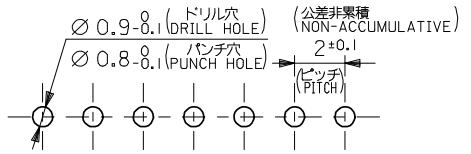

基板取付穴推奨寸法（参考）
RECOMMENDED P.C.BOARD HOLE DIMENSION (REFERENCE)

2極品のキンク形態図
KINK FORM FOR 2 CKTS.

両方のテールにキンクを施す。
SOLDER TAIL KINK SHOULD BE ADDED ON BOTH TAILS.

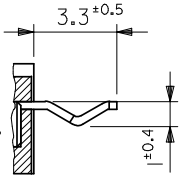

注記 NOTES

1. 嵌合相手 ： 51004−＊＊00
   MATES WITH : 51004-**00

△2 3極以上のキンク加工については、トレードマーク側からキンク、ストレートの順に、1極おきに2箇所以上に施すこと。
KINK TO BE ADDED ON THE ODD NUMBER SOLDER TAILS. (FROM THE TRADE MARK SIDE.)

△3 ロック用の穴は、2極品及び3極品に1ヶ、4極品以上は2ヶとする。
LOCKING HOLE : 1 PLACE FOR 2, 3 CKTS, 2 PLACES FOR 4 CKTS. AND MORE THAN 4 CKTS.

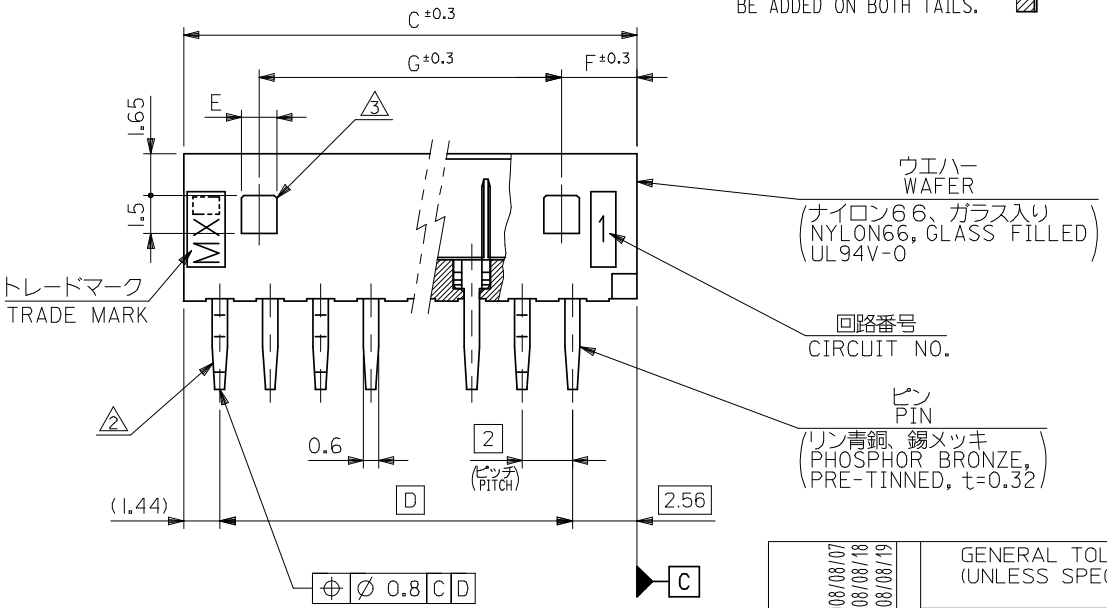

G	F	E	D	C	B	A	PLASTIC BAG ORDER No. オーダー番号	極数 NO. OF CKTS.
26	3	1.4	28	32	31.1	28	53014-1510	15
24	3	1.4	26	30	29.1	26	-1410	14
22	3	1.4	24	28	27.1	24	-1310	13
20	3	1.4	22	26	25.1	22	-1210	12
18	3	1.4	20	24	23.1	20	-1110	11
16	3	1.4	18	22	21.1	18	-1010	10
14	3	1.4	16	20	19.1	16	-0910	9
12	3	1.4	14	18	17.1	14	-0810	8
10	3	1.4	12	16	15.1	12	-0710	7
8	3	1.4	10	14	13.1	10	-0610	6
6	3	1.4	8	12	11.1	8	-0510	5
4	3	1.4	6	10	9.1	6	-0410	4
—〃—	4	3.4	4	8	7.1	4	-0310	3
—〃—	3	1.4	2	6	5.1	2	53014-0210	2

53014-＊＊10 MODEL NO.

REVISED
EC NO: J2009-0377 2008/08/07
DRWN:MNABEI 2008/08/18
CH'KD:THARUYAMA
APPR:NUKITA 2008/08/19
H
DESCRIPTION
REV

GENERAL TOLERANCES (UNLESS SPECIFIED)

10 UNDER	±0.2
10 OVER 30 UNDER	±0.25
30 OVER	±0.3
ANGULAR	±3 °

DRAFT WHERE APPLICABLE MUST REMAIN WITHIN DIMENSIONS

DIMENSION STYLE	MM ONLY
SCALE	5:1
DESIGN UNITS	METRIC
	THIRD ANGLE PROJECTION
DRAWN BY / DATE	M.HENMI '92/03/06
CHECKED BY / DATE	M.FUKUSHIMA '92/05/28
APPROVED BY / DATE	M.ENOMOTO '92/05/28
MATERIAL NO.	SEE TABLE
TITLE	2.0 LOW PROFILE WAFER ASSY
	MOLEX INCORPORATED
DOCUMENT NO.	SD-53014-001
SHEET NO.	1 OF 1
SIZE	A3

THIS DRAWING CONTAINS INFORMATION THAT IS PROPRIETARY TO MOLEX INCORPORATED AND SHOULD NOT BE USED WITHOUT WRITTEN PERMISSION