Parker Hannifin Corporation
Low Pressure Connectors Europe Division
Parc Alcyone - Bat. D
1 rue André et Yvonne Meynier
CS 46911, 35069 Rennes Cedex, France
Email: webcontact@parker.com

ENGINEERING YOUR SUCCESS.

PARKER Low Pressure Connectors Europe Division
Ball Valves Standard Series

PART Number: 4902 10 17

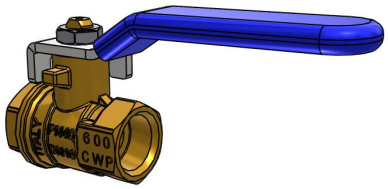

Interactive 3D graphic, click to activate and rotate
(3D capable PDF viewer required)

技术数据	
Part Number	4902 10 17
Series Name	Ball Valves Standard Series
Series Code	Ball_Valves_Standard_Series
Division ID	A43098
Division Name	Low Pressure Connectors Europe Division
Company	Parker Hannifin

PDF Datasheet Powered by CADENAS PARTsolutions

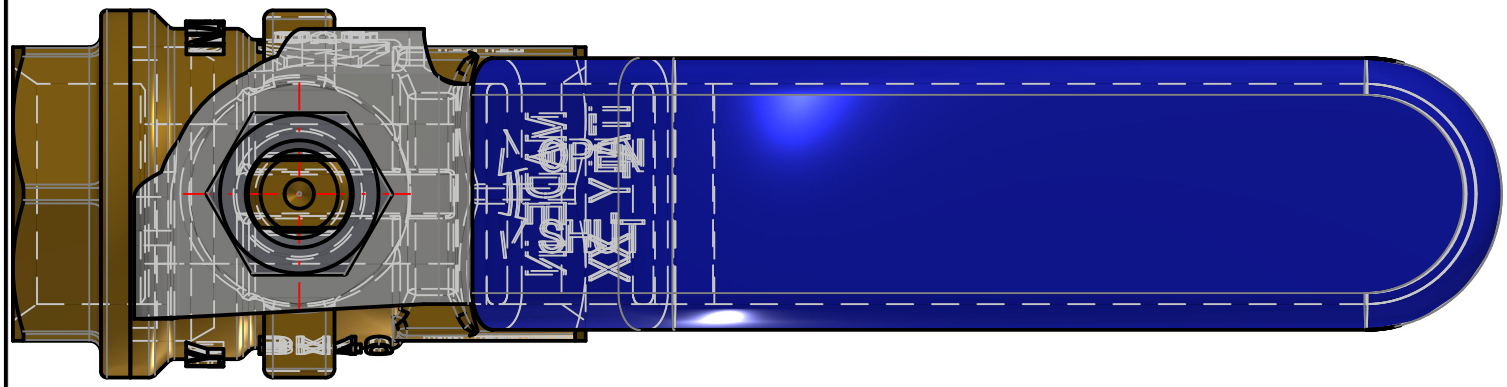

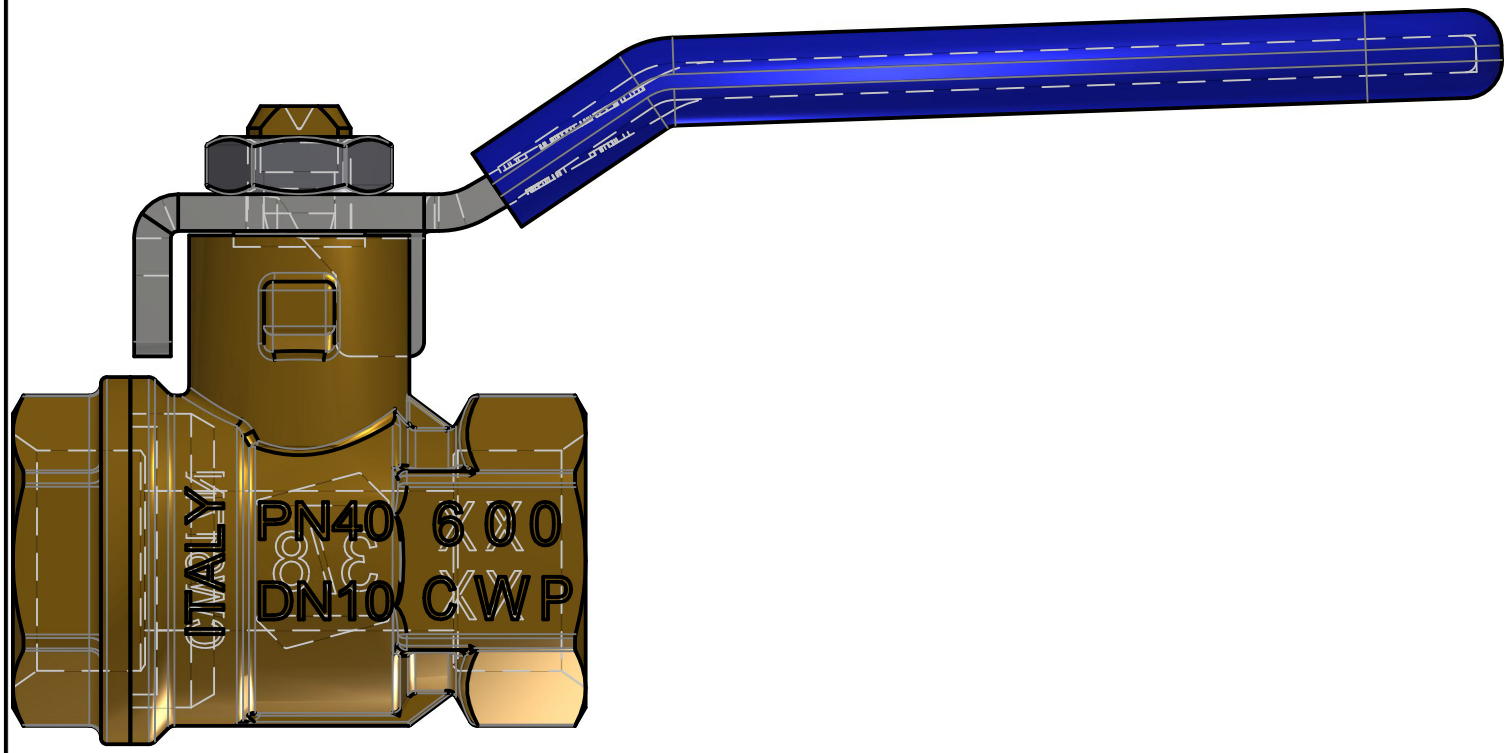

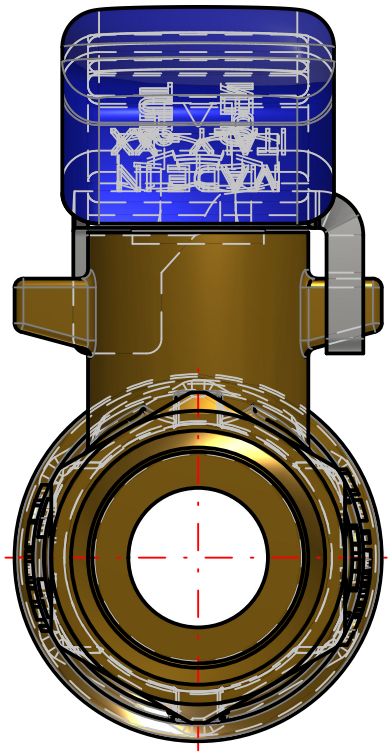

Disclaimer:
Parker Low Pressure Connectors has a continuous policy of product development and although the Company reserves the right to change specifications, it attempts to keep customers informed of any alterations. This publication is for general information only and customers are requested to contact our Sales Department for detailed information and advice on a products suitability for specific applications. All products are sold subject to the company's Standard conditions of sale.

4902 10 17

Price: contact Parker

PDF Datasheet Powered by CADENAS PARTsolutions