brainboxes
www.brainboxes.com

Accessories

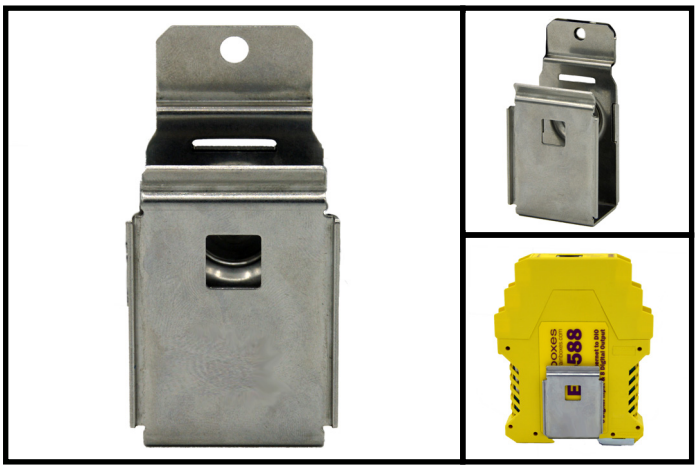

MK- 081

22.5MM MODULAR DEVICE WALL/ SURFACE MOUNTING CLIP - CABINET SPACE SAVER

Product Dimensions = l) x(w) x(h) mm

Packaged Weight = kg, pounds

This metal mounting clip clicks securely onto 22.5mm deep modular devices. It is useful for mounting Brainboxes ED/SW/ES industrial range products at any orientation to any surface/wall to best utilise cabinet space.

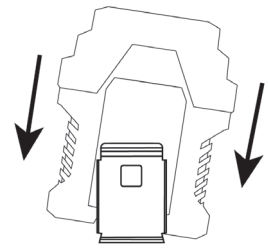

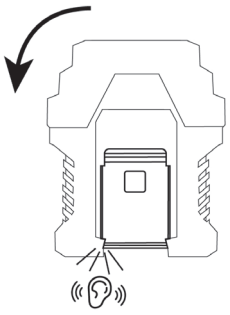

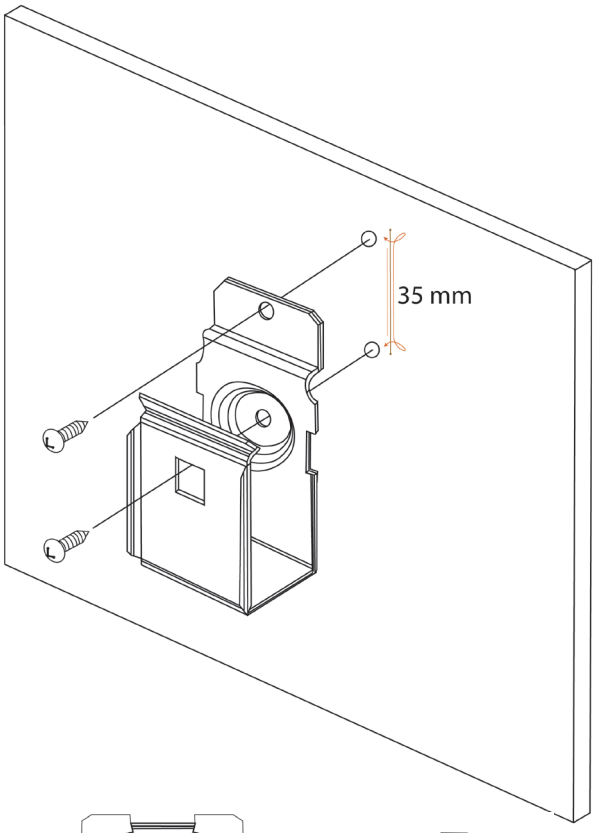

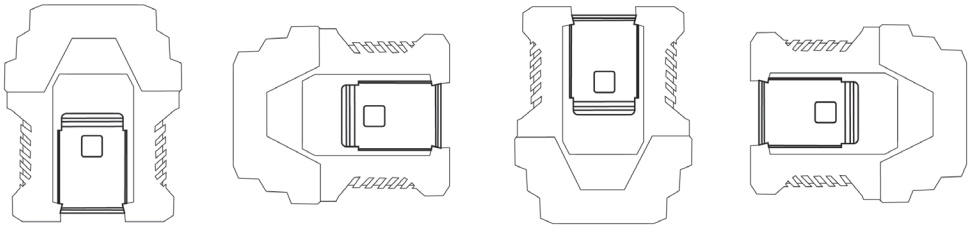

0° 90° 180° 270°

Compatible with Brainboxes product codes:
ED-5XX, ES-5XX, SW-5XX (excl. SW-508)

brainboxes
www.brainboxes.com

Accessories

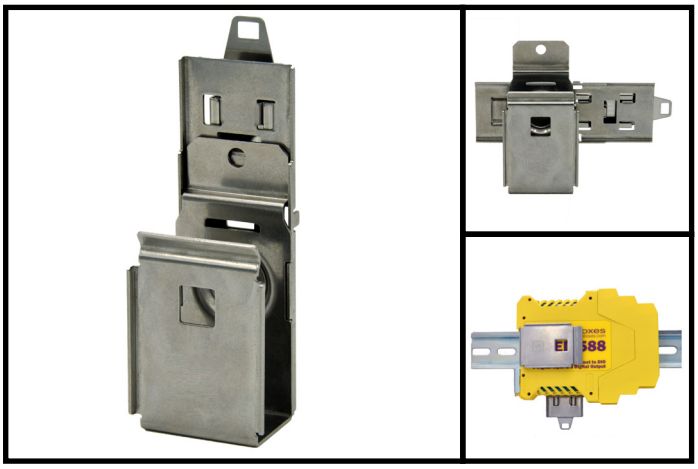

MK-092

22.5 MM MODULAR DEVICE RIGHT ANGLE DIN RAIL MOUNTING CLIP - CABINET SPACE SAVER
Product Dimensions = (l) x (w) x (h) mm
Packaged Weight = kg, pounds

This metal mounting clip clicks securely onto 22.5mm deep modular devices. It is useful for mounting Brainboxes ED/SW/ES industrial range products at any orientation flush to a standard 35mm DIN-rail to best utilise cabinet space.

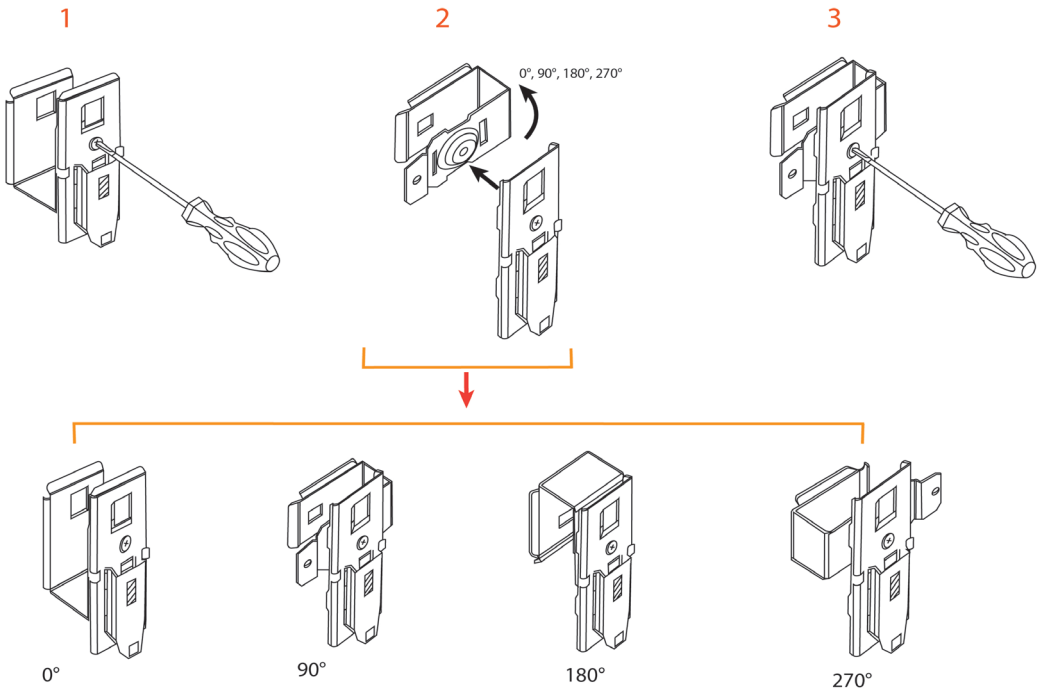

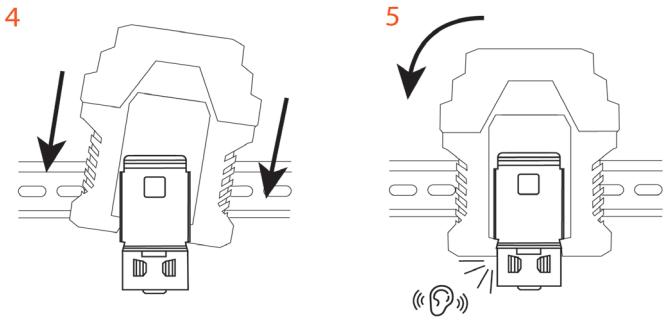

Compatible with Brainboxes product codes:
ED-5XX, ES-5XX, SW-5XX (excl. SW-508)

brainboxes
www.brainboxes.com

Accessories

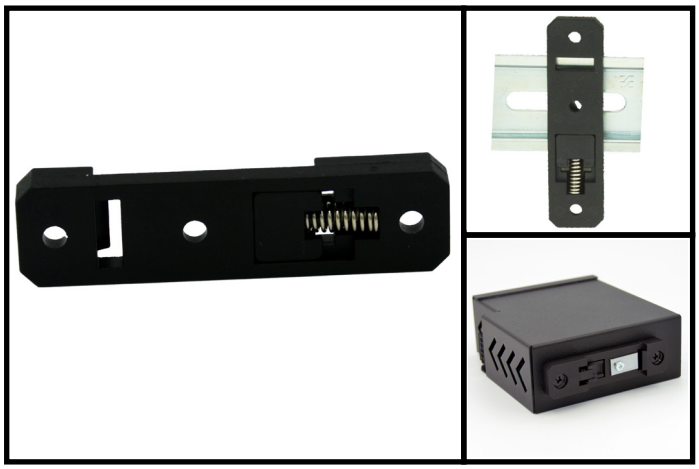

MK-103

SPRING LOADED DIN RAIL MOUNT 20MM WIDTH
Product Dimensions = 76.5(l) x 8(w) x 20(h) mm
Packaged Weight = kg, pounds

This light weight spring loaded mount can be attached to any modular device for easy DIN rail mounting. Contains: 1 screw on mount (plastic)

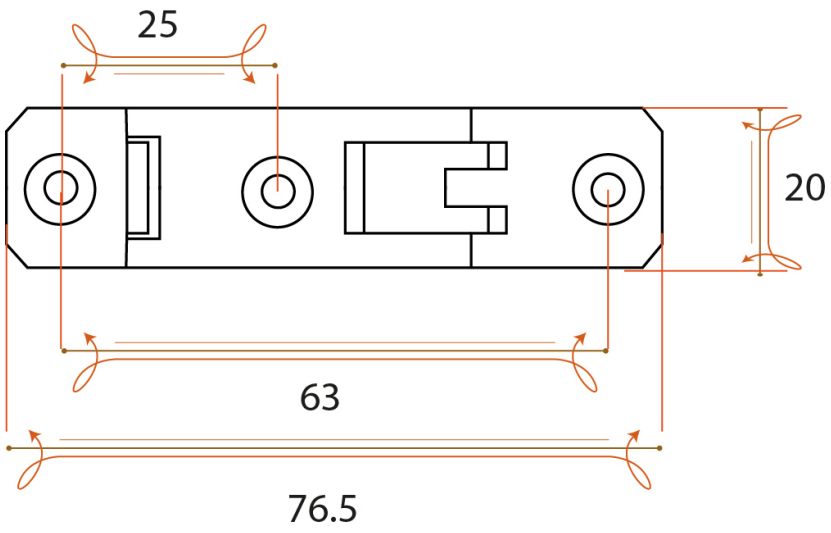

76.5mm x 20mm x 8mm

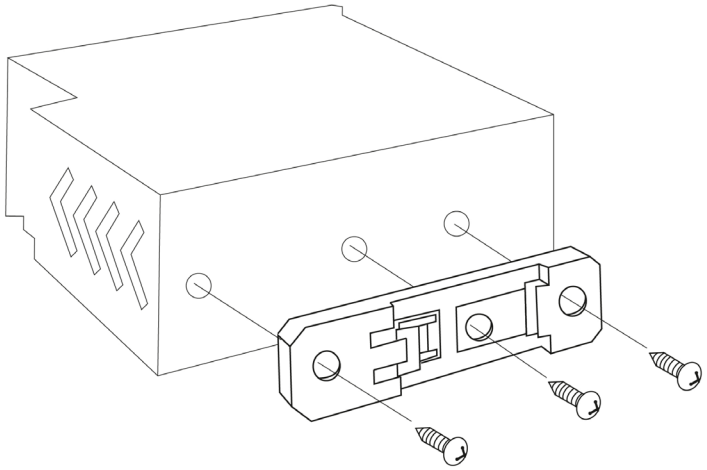

brainboxes
www.brainboxes.com

Accessories

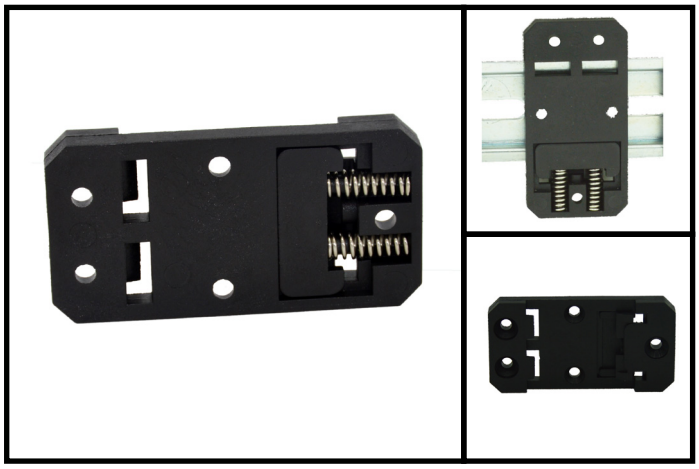

MK-114

SPRING LOADED DIN RAIL MOUNT 35MM WIDTH
Product Dimensions = 68(l) x 8(w) x 35(h) mm
Packaged Weight = kg, pounds

This light weight spring loaded mount can be attached to any modular device for easy DIN rail mounting. Contains: 1 screw on mount (plastic)

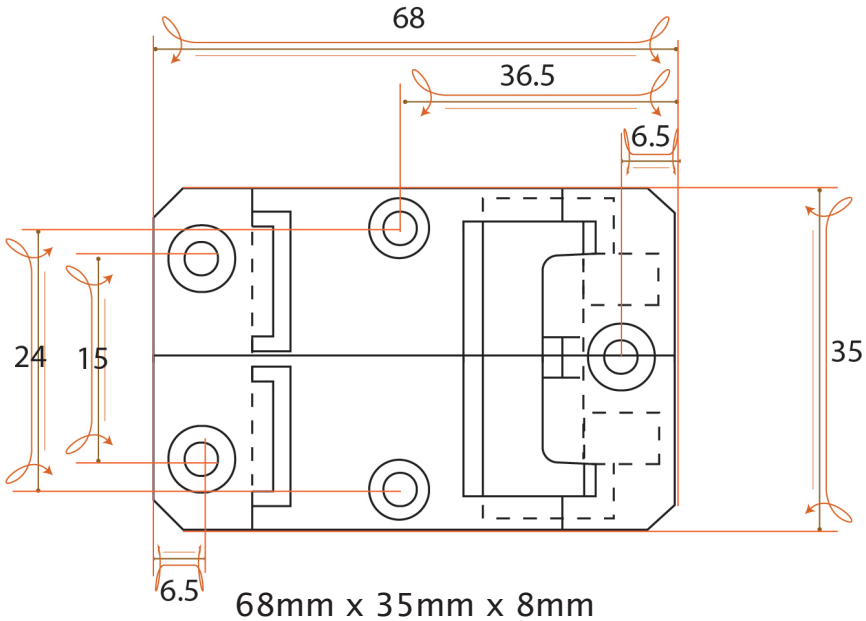

68mm x 35mm x 8mm

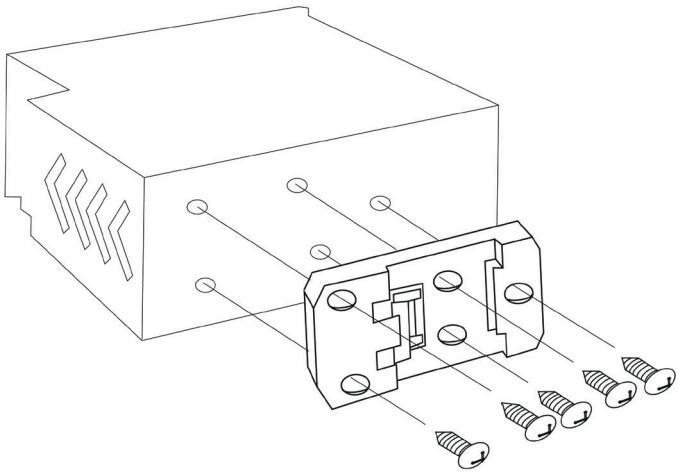

brainboxes
www.brainboxes.com

Accessories

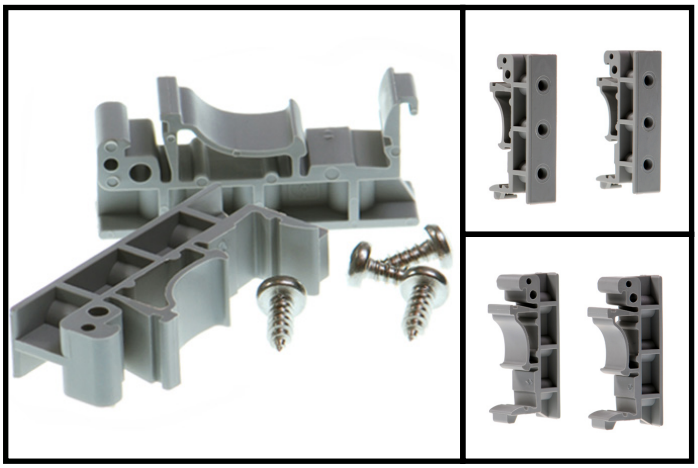

MK-048

DIN-RAIL MOUNTING KIT FOR 2 PORT ES/ US/ED - RETAIL PACK

Product Dimensions = 10(l) x 43(w) x 19(h) mm
Packaged Weight = 0.022 kg, 0.05 pounds

This light weight snap on DIN rail kit is compatible with Brainboxes 2 port Ethernet to Serial and USB to Serial Devices. Contains: 2 snap on clips (plastic), 2 screws (to attach to device lugs).

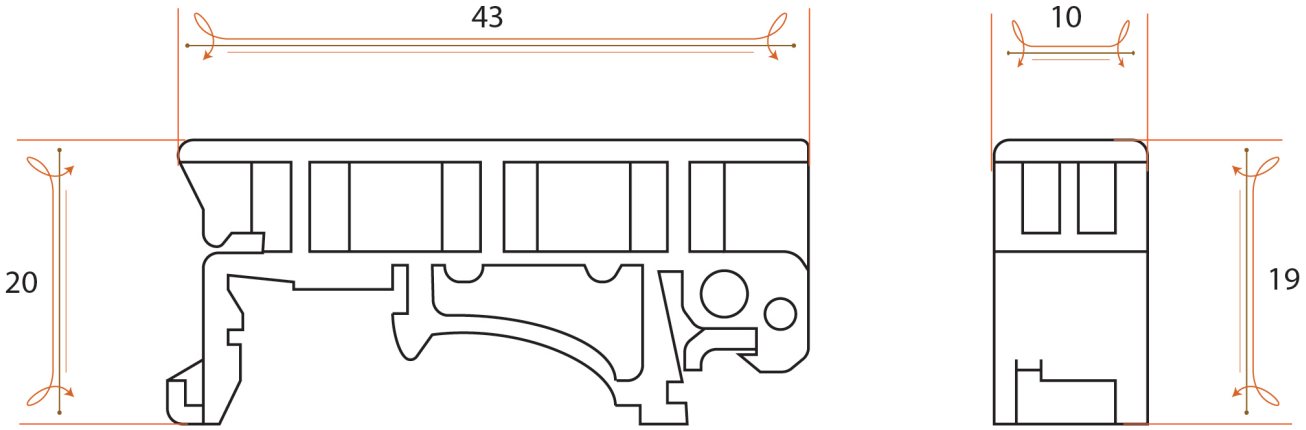

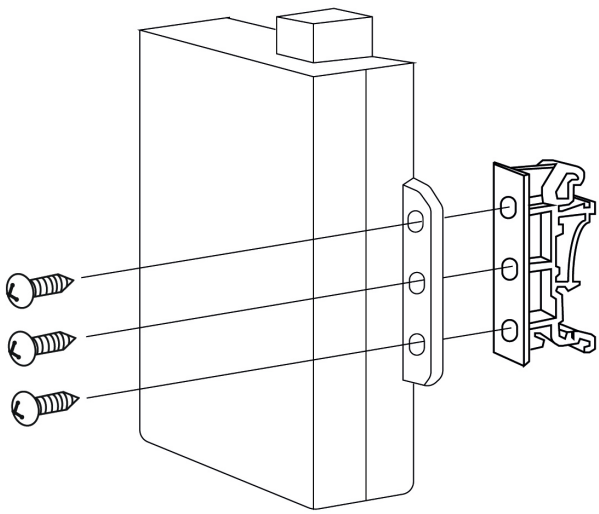

Compatible with Brainboxes product codes
SW-0XX, ES-2XX, ES-3XX, ES-4XX, ED-0XX ED-2XX

brainboxes
www.brainboxes.com

Accessories

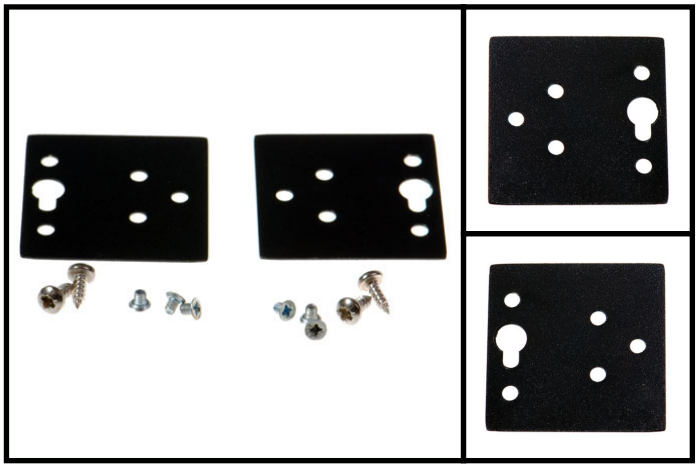

MK-059

WALL MOUNTING KIT FOR ES/US 4&8 PORT - RETAIL PACK

Product Dimensions = 100(l) x 0.7(w) x 52(h) mm
Packaged Weight = 0.33 kg, 0.73 pounds

Wall mounting kit compatible with Brainboxes 4 & 8 port Ethernet to Serial and 4 & 8 port USB to Serial. Comes with suitable screws.

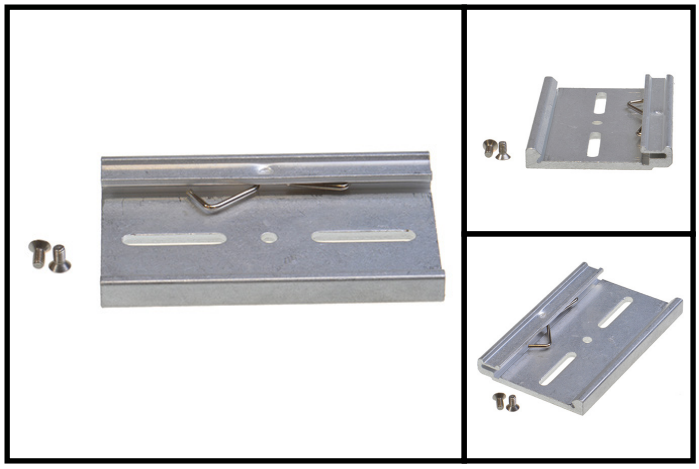

MK-070

SNAP IN DIN-RAIL CLIP KIT FOR ES/US 4&8 PORT - RETAIL PACK

Product Dimensions = 65(l) x 0(w) x 52(h) mm
Packaged Weight = 0.022 kg, 0.05 pounds

Light weight 'Snap-in' Din-Rail clip suitable for mounting Brainboxes 4 & 8 port Ethernet to Serial and 4 & 8 port USB to Serial.

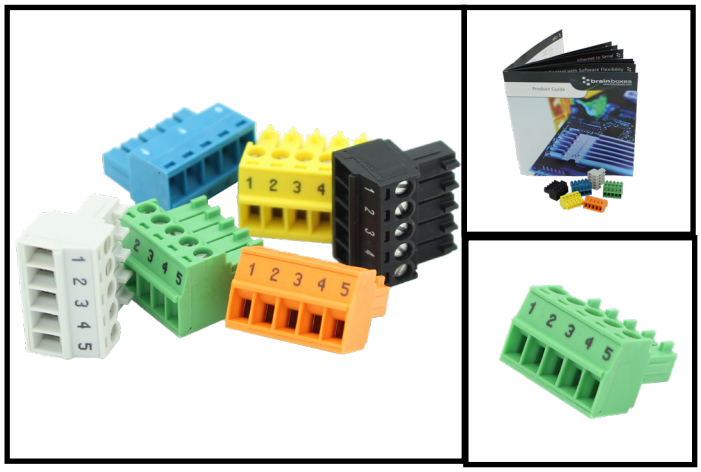

MK-588

6 PACK ED-5XX/ ES-5XX 5-WAY 3.5MM PITCH PLUGGABLE BLOCKS - RETAIL PACK

Product Dimensions = 125(l) x 120(w) x20(h) mm
Packaged Weight = 0.038 kg, 0.08 pounds

6 coloured PCB connectors suitable for Brainboxes Industrial Ethernet to Serial (ES-5XX), Industrial Ethernet I/O modules (ED-5XX) and BB-400. Individually numbered pins simplify wiring and remove confusion. 5 x 3.5mm pitch screw connections with tension sleeve.

brainboxes
www.brainboxes.com

Accessories

Brainboxes offers a variety of accessories that are compatible with various devices. Our products are supplied with everything you need to get started but you may require additional accessories depending on your application.

All our accessories are available to be purchased separately with no minimum order quantity.
If you are unsure about any alternative or additional requirements please speak to the sales team.

Check your selection for compatibility with Brainboxes product codes:

MK-048	MK-059	MK-070	MK-588
ES-246, ES-257, ES-313	ES-279, ES-346, ES-701	ES-279, ES-346, ES-701	ES-511, ES-522, ES-551
ES-320, ES-357 (ES-057)	ES-842	ES-842,	ES-571
ES-020, ES-042, ES-446	US-279, US-346, US-601	US-279, US-346, US-601	ED-516, ED-527, ED-538,
ES-457, ES-420, ES-413	US-701, US-842	US-701, US-842	ED-549, ED-560, ED-582
US-257, US-313			ED-588, ED-593
ED-008, ED-004, ED-038			BB-400
ED-204			
SW-005			

MK-081	MK-092
ES-511, ES-522, ES-551	ES-511, ES-522, ES-551
ES-571	ES-571
ED-588, ED-527, ED-516	ED-588, ED-527, ED-516
ED-560, ED-549, ED-582	ED-560, ED-549, ED-582
ED-592, ED-538	ED-592, ED-538
SW-504, SW-505, SW-515	SW-504, SW-505, SW-515
SW-525	SW-525