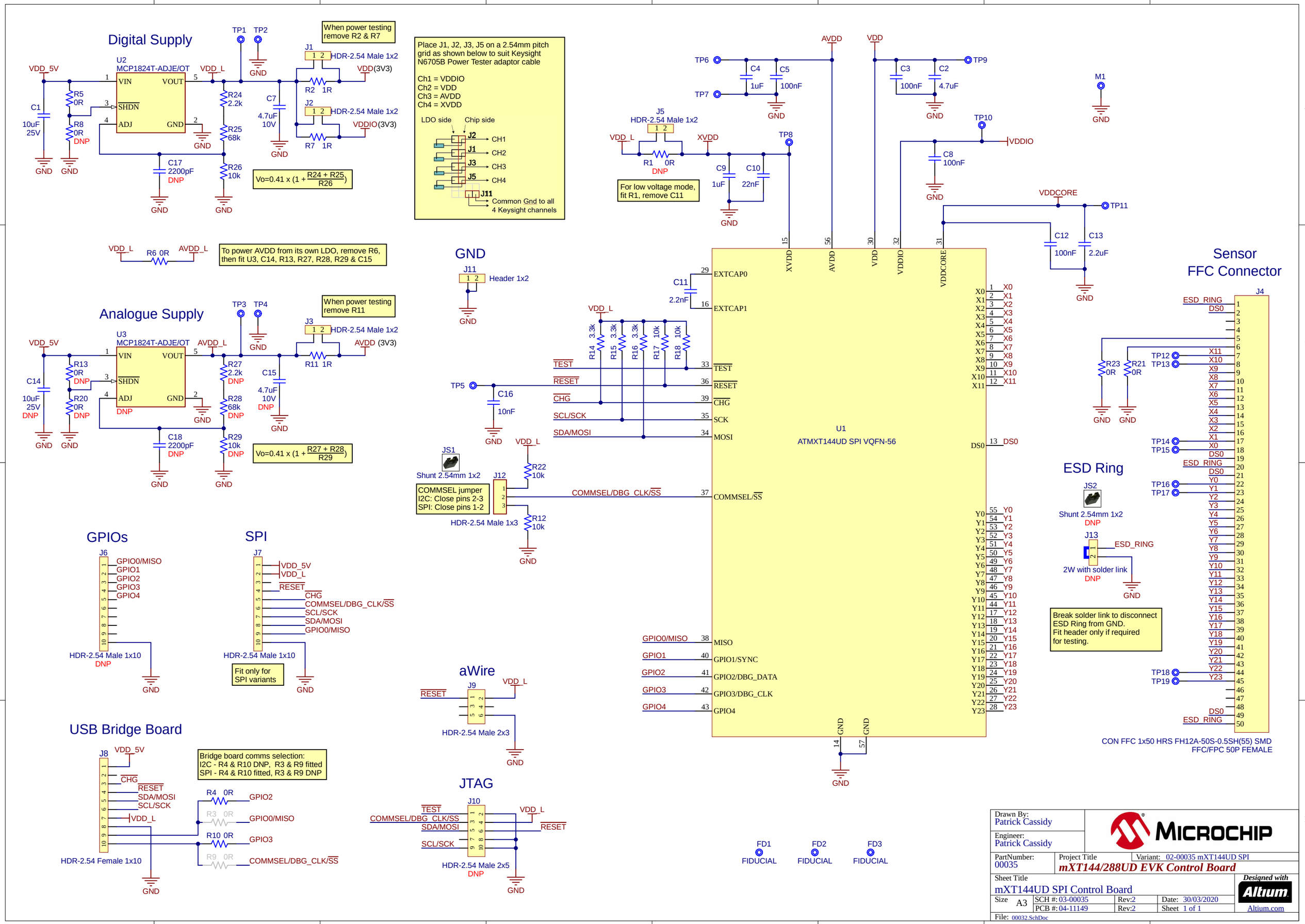
Digital Supply
U2
MCP1824T-ADJE/OT
VIN
VOUT
SHDN
ADJ
GND
VDD_5V
VDD_L
TP1
TP2
When power testing remove R2 & R7
J1
HDR-2.54 Male 1x2
VDD(3V3)
R2 1R
J2
HDR-2.54 Male 1x2
VDDIO(3V3)
R7 1R
C1 10uF 25V
R5 0R
R8 0R DNP
C17 2200pF DNP
R24 2.2k
R25 68k
R26 10k
C7 4.7uF 10V
Vo=0.41 x (1 + R24 + R25 / R26)
Place J1, J2, J3, J5 on a 2.54mm pitch grid as shown below to suit Keysight N6705B Power Tester adaptor cable
Ch1 = VDDIO
Ch2 = VDD
Ch3 = AVDD
Ch4 = XVDD
LDO side
Chip side
J2
J1
J3
J5
J11
CH1
CH2
CH3
CH4
Common Gnd to all 4 Keysight channels
VDD_L
R6 0R
AVDD_L
To power AVDD from its own LDO, remove R6, then fit U3, C14, R13, R27, R28, R29 & C15
Analogue Supply
U3
MCP1824T-ADJE/OT
TP3
TP4
When power testing remove R11
J3
HDR-2.54 Male 1x2
AVDD (3V3)
R11 1R
C14 10uF 25V DNP
R13 0R DNP
R20 0R DNP
C18 2200pF DNP
R27 2.2k DNP
R28 68k DNP
R29 10k DNP
C15 4.7uF 10V DNP
Vo=0.41 x (1 + R27 + R28 / R29)
GND
J11
Header 1x2
TP5
C16 10nF
JS1
Shunt 2.54mm 1x2
J12
HDR-2.54 Male 1x3
COMMSEL jumper
I2C: Close pins 2-3
SPI: Close pins 1-2
R22 10k
R12 10k
COMMSEL/DBG_CLK/SS
TEST
RESET
CHG
SCL/SCK
SDA/MOSI
R14 3.3k
R15 3.3k
R16 3.3k
R17 10k
R18 10k
TP6
TP7
C4 1uF
C5 100nF
AVDD
VDD
C3 100nF
C2 4.7uF
TP9
M1
J5
HDR-2.54 Male 1x2
R1 0R DNP
XVDD
TP8
C9 1uF
C10 22nF
For low voltage mode, fit R1, remove C11
TP10
VDDIO
C8 100nF
VDDCORE
TP11
C12 100nF
C13 2.2uF
C11 2.2nF
EXTCAP0
EXTCAP1
U1
ATMXT144UD SPI VQFN-56
MISO
GPIO1/SYNC
GPIO2/DBG_DATA
GPIO3/DBG_CLK
GPIO4
GPIO0/MISO
GPIO1
GPIO2
GPIO3
GPIO4
Sensor FFC Connector
J4
ESD_RING
DS0
R23 0R
R21 0R
TP12
TP13
TP14
TP15
TP16
TP17
TP18
TP19
ESD Ring
JS2
Shunt 2.54mm 1x2 DNP
J13
2W with solder link DNP
Break solder link to disconnect ESD Ring from GND. Fit header only if required for testing.
CON FFC 1x50 HRS FH12A-50S-0.5SH(55) SMD FFC/FPC 50P FEMALE
GPIOs
J6
GPIO0/MISO
GPIO1
GPIO2
GPIO3
GPIO4
HDR-2.54 Male 1x10 DNP
SPI
J7
VDD_5V
VDD_L
RESET
CHG
COMMSEL/DBG_CLK/SS
SCL/SCK
SDA/MOSI
GPIO0/MISO
HDR-2.54 Male 1x10
Fit only for SPI variants
aWire
J9
HDR-2.54 Male 2x3
USB Bridge Board
J8
HDR-2.54 Female 1x10
Bridge board comms selection:
I2C - R4 & R10 DNP, R3 & R9 fitted
SPI - R4 & R10 fitted, R3 & R9 DNP
R4 0R
R3 0R
R10 0R
R9 0R
JTAG
J10
HDR-2.54 Male 2x5 DNP
FD1 FIDUCIAL
FD2 FIDUCIAL
FD3 FIDUCIAL
Drawn By: Patrick Cassidy
Engineer: Patrick Cassidy
MICROCHIP
PartNumber: 00035
Project Title
Variant: 02-00035 mXT144UD SPI
mXT144/288UD EVK Control Board
Sheet Title
mXT144UD SPI Control Board
Size A3
SCH #: 03-00035
Rev:2
Date: 30/03/2020
PCB #: 04-11149
Rev:2
Sheet 1 of 1
File: 00032.SchDoc
Designed with Altium
Altium.com