Features

- 3" (DN 80)
- Material: DUCTILE IRON
- Working Pressure: PN16
- Working Temp: +4℃~ +110℃
- Water Type
- Lever Operator
- Double acting actuator

RS PRO DUCTILE IRON Wafer Butterfly Valve, 3" with double acting actuator 5.5 Bar

RS Stock No.: 0834626

RS Professionally Approved Products bring to you professional quality parts across all product categories. Our product range has been tested by engineers and provides a comparable quality to the leading brands without paying a premium price.

Product Description

This butterfly valve is suitable for throttling or isolating corrosive or non-corrosive gases, liquids, semi-liquids, and solid powders.

Feature:
3" (DN 80)
Material: DUCTILE IRON
Working Pressure: PN16
Working Temp: +4℃~ +110℃
Water Type
Lever Operator
Double Acting Actuator

Materials:
BODY: DUCTILE IRON
SEAT: EPDM
DISC: ASTM A351-CF8M
BUSHING: FRP
SHAFT: SS 420
O-RING: NBR
HALF RING/GASKET: STAINLESS STEEL
SNAP SPRING: SK7

Similar Products

RS Stock No.	MPN	Actuator Model	DN (mm)	NPS	L (mm)	H	H1	H2
	834624	834624	DN50	2"				
	834611	834611	DN65	2 1/2				
	834626	834626	DN80	3"				
	834627	834627	DN100	4"				
	834628	834628	DN150	6"				
	834629	834629	DN200	8"				

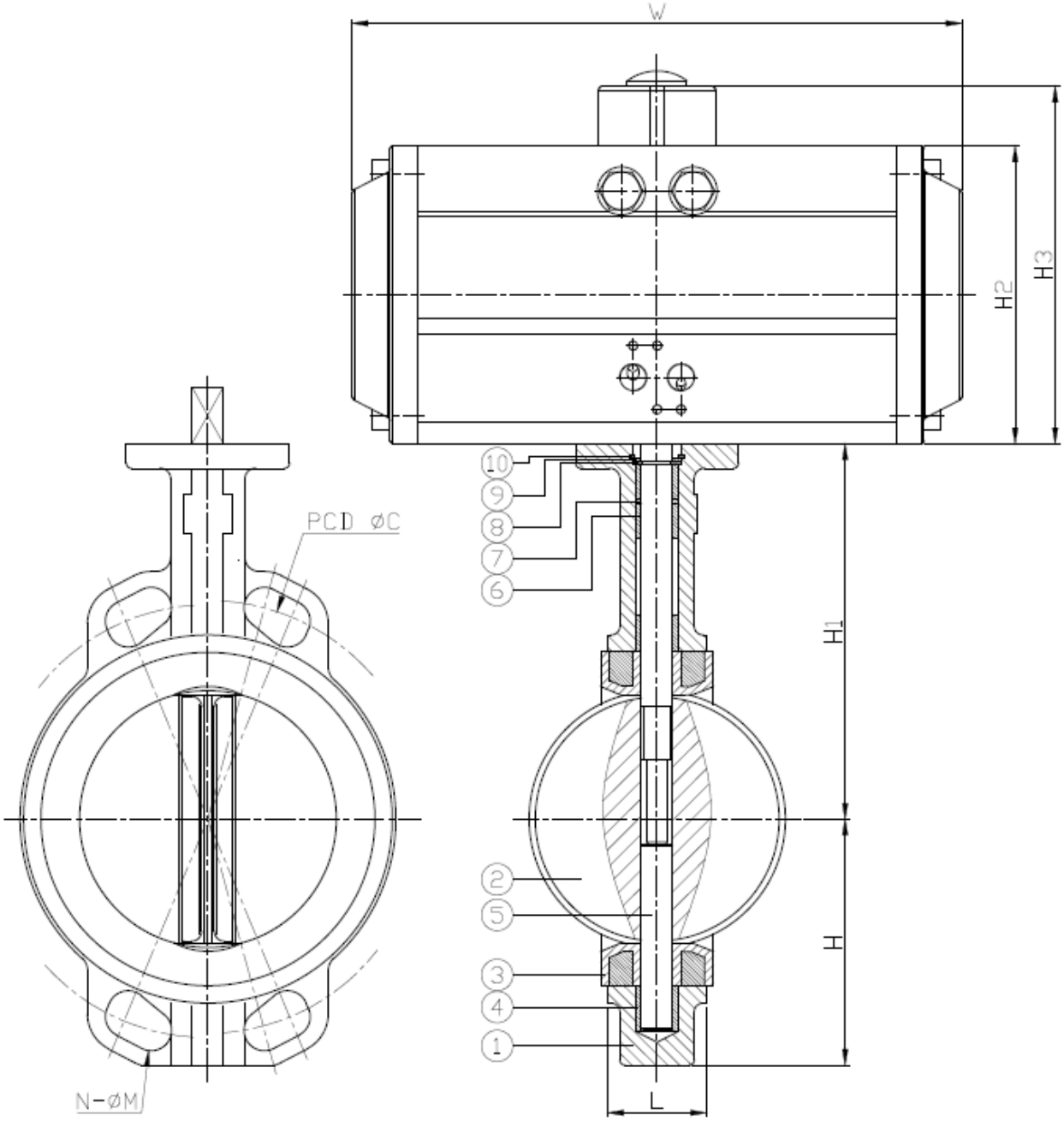
W
H3
H2
H1
H
L
PCD ØC
N-ØM
10
9
8
7
6
2
5
3
4
1

DN	C	L	H	H1	H2	W	N	M	Actuator
50	125	43	80	140	74	158	4	19	HTD-052
65	145	46	89	150	88	190	4	19	HTD-063
80	160	46	95	158	100	206	8	19	HTD-075
100	180	52	114	176	109	213	8	19	HTD-083
150	240	56	139	211	133	284	8	23	HTD-105
200	295	60	174	236	171.5	414	12	23	HTD-140

unit: mm

NPS	C	L	H	H1	H2	W	N	M	Actuator
2"	4.92	1.69	3.15	5.51	2.91	6.22	4	0.75	HTD-052
2-1/2"	5.71	1.81	3.5	5.91	3.46	7.48	4	0.75	HTD-063
3"	6.3	1.81	3.74	6.22	3.94	8.11	8	0.75	HTD-075
4"	7.09	2.05	4.49	6.93	4.29	8.39	8	0.75	HTD-083
6"	9.45	2.2	5.47	8.31	5.24	11.18	8	0.91	HTD-105
8"	11.61	2.36	6.85	9.29	6.75	16.3	12	0.91	HTD-140

unit: in

ITEM	PARTS	MATERIAL
1	BODY	DI
2	DISC	ASTM A351-CF8M
3	SEAT	EPDM
4	LONG BUSHING	FRP
5	SHAFT	SS 420
6	UP BUSHING	FRP
7	O-RING	NBR
8	HALF RING	STAINLESS STEEL
9	GASKET	
10	SNAP SPRING	SK7

FEATURE :
- Design : EN 593
- Inspection & test : EN 12266-1
- End standard : EN 1092-2
- Face to Face : EN 558-1
- Flange End : PN16
- Work Pressure : 16Bar

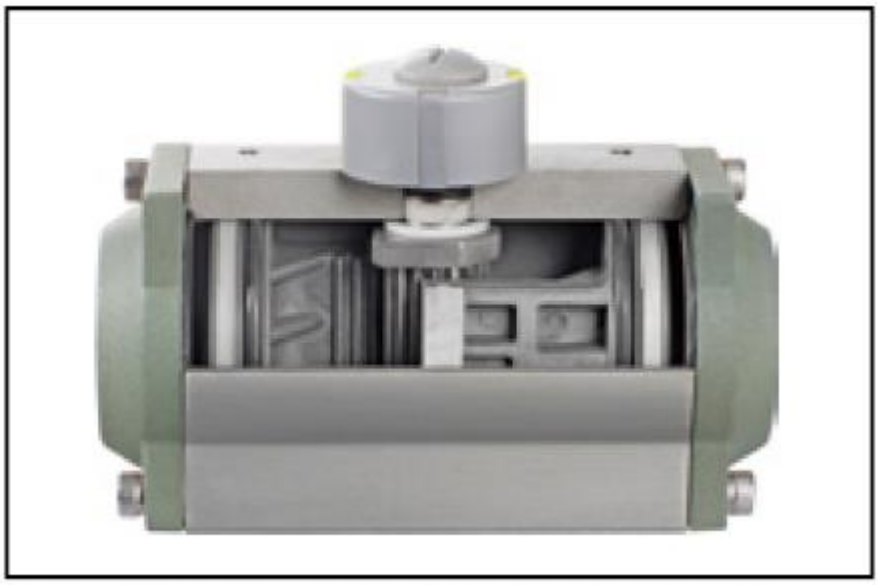

The operating principle of double acting actuator

CCW-counter-clockwise

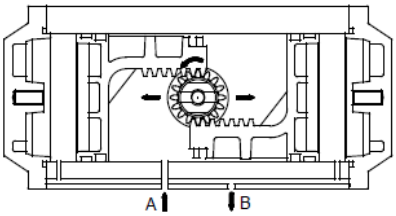

Air to port A forces the pistons outwards, causing the piston to turn counter-clockwise while air is being exhausted from port B.

CW-clockwise

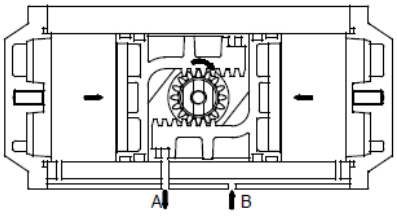

Air to port B forces the pistons inwards, causing the piston to turn clockwise while air is being exhausted from port A.

Torque Table of Double Acting Actuator

Unit: in.lbs

Model	Air Supply Pressure						
	40 Psi	50 Psi	60 Psi	70 Psi	80 Psi	90 Psi	100 Psi
HTD-032	33	43	54	63	72	80	86
HTD-052	94	118	142	165	189	212	236
HTD-063	168	210	252	294	336	378	420
HTD-075	274	342	409	477	545	613	681
HTD-083	344	430	516	602	688	775	860
HTD-092	527	660	792	923	1054	1186	1318
HTD-105	770	967	1163	1350	1541	1733	1926
HTD-125	1323	1654	1985	2316	2647	2977	3308
HTD-140	1992	2489	2987	3485	3983	4481	4979
HTD-160	3067	3834	4601	5368	6135	6902	7669

Unit: N.m

Model	Air Supply Pressure					
	3 Bar	4 Bar	5 Bar	6 Bar	7 Bar	8 Bar
HTD-032	4.1	5.9	7.4	8.8	9.8	11.3
HTD-052	11.6	15.5	19.3	23.2	27.1	31
HTD-063	20.6	27.5	34.4	41.3	48.2	55
HTD-075	33.7	44.7	55.9	67	78.2	89.3
HTD-083	42.3	56.4	70.5	84.6	98.7	112.9
HTD-092	64.8	86.5	108	129.6	151.2	172.8
HTD-105	94.7	127.2	157.8	189.4	220.9	252.5
HTD-125	162.7	216.9	271.1	325.3	379.5	433.8
HTD-140	244.8	326.4	408	489.6	571.2	652.8
HTD-160	377	502.7	628.4	754.1	879.7	1005.4