

Image may differ from product. See technical specification for details.

# S7016 ACDGC/P4A

**Super-precision, high-capacity, universally matchable single row angular contact ball bearing with seals**

These super-precision, high-capacity, single row angular contact ball bearings, with non-contact seals, accommodate radial and axial loads acting simultaneously, where the axial load acts in one direction only. They are designed to accommodate heavy loads at relatively high speeds under low to moderate operating temperatures. Being universally matchable, they can be used together in arrangements to provide effective load sharing, without the use of shims or similar devices.

- Very high running accuracy
- Very high load carrying capacity
- Universally matchable
- Non-contact seals
- Integral sealing prolongs bearing service life

# Overview

## Dimensions

| | |
|---|---|
| Bore diameter | 80 mm |
| Outside diameter | 125 mm |
| Width | 22 mm |
| Contact angle | 25 ° |

## Performance

| | |
|---|---|
| Basic dynamic load rating | 65 kN |
| Basic static load rating | 58.5 kN |
| Note | Refer to catalogue data or contact SKF for the attainable speeds |

## Properties

| | |
|---|---|
| Contact type | Normal contact (two-point contact) |
| Number of rows | 1 |
| Ring type | One-piece inner and outer rings |
| Design | High-capacity D |
| Universal matching bearing | Yes, back-to-back (<>), face-to-face (><) or tandem (>>) |
| Matched arrangement | No |
| Matched condition (axial clearance/ preload) | Measuring load, class C |
| Tolerance class | P4A |
| Material, bearing | Bearing steel |
| Coating | Without |
| Sealing | Seal on both sides |
| Sealing type | Non-contact |
| Lubricant | Grease |
| Indicative carbon footprint for new product | 3.2 kg $CO_2$e |

## Logistics

| | |
|---|---|
| Product net weight | 0.867 kg |
| eClass code | 23-05-08-04 |
| UNSPSC code | 31171531 |

# Technical specification

| | |
|---|---|
| Universal matching bearing(s) | Yes, back-to-back (<>), face-to-face (><) or tandem (>>) |

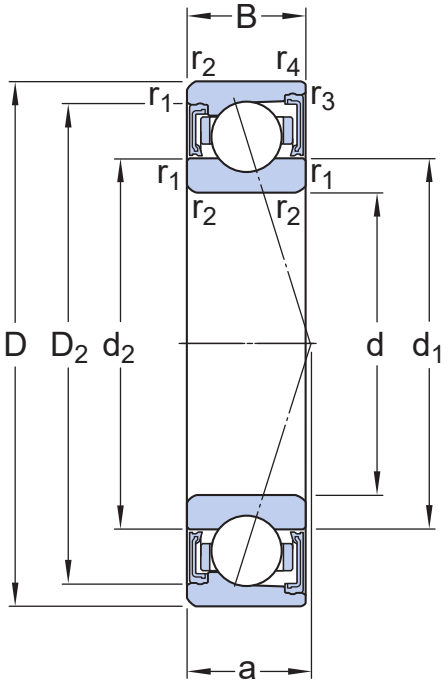


## Dimensions

| | | |
|---|---|---|
| d | 80 mm | Bore diameter |
| D | 125 mm | Outside diameter |
| B | 22 mm | Width |
| $d_1$ | 93.9 mm | Shoulder diameter of inner ring (large side face) |
| $d_2$ | 93.9 mm | Shoulder diameter of inner ring (small side face) |
| $D_2$ | 113.95 mm | Recess diameter of outer ring (large side face) |
| $r_{1,2}$ | min. 1.1 mm | Chamfer dimension |
| $r_{3,4}$ | min. 0.6 mm | Chamfer dimension |
| a | 35 mm | Distance from side face to pressure point |

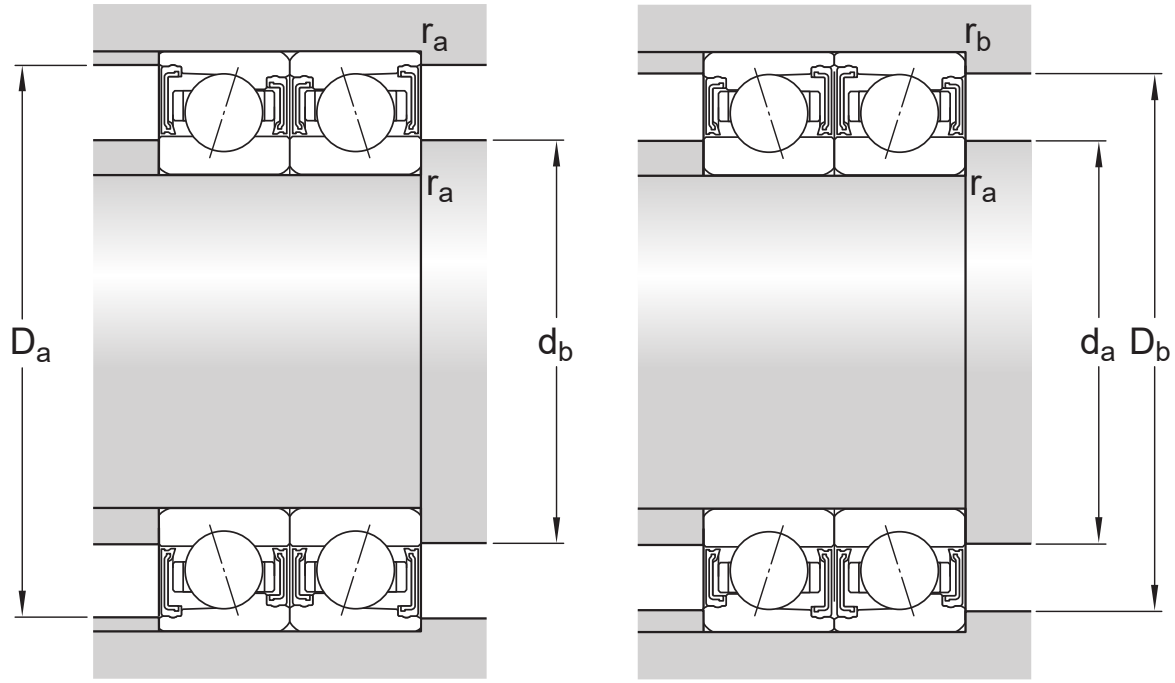


## Abutment dimensions

| | | |
|---|---|---|
| $d_a$ | min. 86 mm | Diameter of shaft abutment |
| $d_a$ | max. 93.3 mm | Diameter of shaft abutment |
| $d_b$ | min. 86 mm | Diameter of shaft abutment |
| $d_b$ | max. 93.3 mm | Diameter of shaft abutment |
| $D_a$ | max. 119 mm | Diameter of housing abutment |
| $D_b$ | max. 121 mm | Diameter of housing abutment |
| $r_a$ | max. 1 mm | Radius of fillet |
| $r_b$ | max. 0.6 mm | Radius of fillet |

## Calculation data

| | | |
|---|---|---|
| Basic dynamic load rating | C | 65 kN |
| Basic static load rating | $C_0$ | 58.5 kN |
| Fatigue load limit | $P_u$ | 2.45 kN |
| Attainable speeds | | Refer to catalogue data or contact SKF for the attainable speeds |
| Contact angle | α | 25 ° |
| Ball diameter | $D_w$ | 14.288 mm |
| Number of rows | i | 1 |
| Number of balls (per bearing) | z | 20 |

## PRELOAD AND STIFFNESS (BACK-TO-BACK, FACE-TO-FACE)

| | | |
|---|---|---|
| Preload class | | C |
| Preload when unmounted | G | 1 560 N |
| Axial stiffness | | 386 N/µm |
| Preload, class C | $G_C$ | 1 560 N |
| Axial stiffness for preload C (sets of two brgs back-to-back or face-to-face) | | 386 N/µm |

## CORRECTION FACTORS FOR PRELOAD CALCULATION

| | | |
|---|---|---|
| Correction factor dependent on bearing series and size | f | 1.1 |
| Correction factor dependent on contact angle | $f_1$ | 0.99 |
| Correction factor, preload class C | $f_{2C}$ | 1.1 |
| Correction factor for hybrid bearings | $f_{HC}$ | 1 |

## FACTORS FOR EQUIVALENT BEARING LOAD CALCULATION

| | | |
|---|---|---|
| Limiting value | e | 0.68 |
| Axial load factor (single, tandem) | $Y_1$ | 0 |
| Axial load factor (single, tandem) | $Y_2$ | 0.87 |
| Axial load factor (single, tandem) | $Y_0$ | 0.38 |
| Radial load factor (single, tandem) | $X_1$ | 1 |
| Radial load factor (single, tandem) | $X_2$ | 0.41 |
| Radial load factor (single, tandem) | $X_0$ | 0.5 |
| Axial load factor (back-to-back, face-to-face) | $Y_1$ | 0.92 |
| Axial load factor (back-to-back, face-to-face) | $Y_2$ | 1.4 |
| Axial load factor (back-to-back, face-to-face) | $Y_0$ | 0.76 |
| Radial load factor (back-to-back, face-to-face) | $X_1$ | 1 |
| Radial load factor (back-to-back, face-to-face) | $X_2$ | 0.67 |
| Radial load factor (back-to-back, face-to-face) | $X_0$ | 1 |

## Tolerances and clearances

## GENERAL BEARING SPECIFICATIONS

- Tolerances: P4A, P4B, P4, PA9A, P2

## PRINCIPLES OF BEARING SELECTION AND APPLICATION

- Chamfer dimensions
- Seat tolerances for standard conditions: shafts, housings
- Values for ISO tolerance classes: shafts, housings
- Speed dependent initial grease fill → Initial grease fill
- Clamping and fitting forces: D design, E design, B design
- Designation suffixes H, H1, L and L1 identify variants for direct oil-air lubrication.

## FACTORS FOR EQUIVALENT BEARING LOAD CALCULATION

- Note 1: Single bearings and bearings arranged in tandem
- Note 2: Bearings paired back-to-back or face-to-face

## SPEED REDUCTION FACTORS FOR SPEED CALCULATION

| Number of bearings | Arrangement | Designation suffix | Speed reduction factors | | | | | | | | | | | | | | |
|---|---|---|---|---|---|---|---|---|---|---|---|---|---|---|---|---|---|
| | | for matched sets | for bearings in the series | | | | | | | | | | | | | | |
| | | | 718 .. D, 719 .. E, and 70 .. E | | | | | | S70 .. W | 719 .. A and 70 .. A | 719 .. B and 70 .. B | | | 719 .. D, 70 .. D and 72 .. D | | | |
| | | | for preload class | | | | | | | | for preload class | | | for preload class | | | |
| | | | A | L | B | M | C | F | – | – | A | B | C | A | B | C | D |
| 2 | Back-to-back | DB | 0,8 | – | 0,65 | – | 0,4 | – | 0,81 | 0,8 | 0,83 | 0,78 | 0,58 | 0,81 | 0,75 | 0,65 | 0,4 |
| | Face-to-face | DF | 0,77 | – | 0,61 | – | 0,36 | – | – | – | 0,8 | 0,74 | 0,54 | 0,77 | 0,72 | 0,61 | 0,36 |
| 3 | Back-to-back and tandem | TBT | 0,69 | 0,72 | 0,49 | 0,58 | 0,25 | 0,36 | – | – | 0,72 | 0,66 | 0,4 | 0,7 | 0,63 | 0,49 | 0,25 |
| | Face-to-face and tandem | TFT | 0,63 | 0,66 | 0,42 | 0,49 | 0,17 | 0,24 | – | – | 0,64 | 0,56 | 0,3 | 0,63 | 0,56 | 0,42 | 0,17 |
| 4 | Tandem back-to-back | QBC | 0,64 | – | 0,53 | – | 0,32 | – | – | – | 0,67 | 0,64 | 0,48 | 0,64 | 0,6 | 0,53 | 0,32 |
| | Tandem face-to-face | QFC | 0,62 | – | 0,48 | – | 0,27 | – | – | – | 0,64 | 0,6 | 0,41 | 0,62 | 0,58 | 0,48 | 0,27 |

For spring-loaded tandem sets, designation suffix DT, a speed reduction factor of 0,9 should be applied.

# Terms of use

By accessing and using this website / app owned and published by AB SKF (publ.) (556007-3495 · Gothenburg) (“SKF”), you agree to the following terms and conditions:

### Warranty Disclaimer and Limitation of Liability

Although every care has been taken to assure the accuracy of the information on this website / app, SKF provides this information "AS IS" and DISCLAIMS ALL WARRANTIES, EXPRESS OR IMPLIED, INCLUDING, BUT NOT LIMITED TO, IMPLIED WARRANTIES OF MERCHANTABILITY AND FITNESS FOR A PARTICULAR PURPOSE. You acknowledge that your use of this website / app is at your sole risk, that you assume full responsibility for all costs associated with use of this website / app, and that SKF shall not be liable for any direct, incidental, consequential, or indirect damages of any kind arising out of your access to, or use of the information or software made available on this website / app.

Any warranties and representations in this website / app for SKF products or services that you purchase or use will be subject to the agreed upon terms and conditions in the contract for such product or service.

Further, for non-SKF websites / apps that are referenced in our website / app or where a hyperlink appears, SKF makes no warranties concerning the accuracy or reliability of the information in these websites / apps and assumes no responsibility for material created or published by third parties contained therein. In addition, SKF does not warrant that this website / app or these other linked websites / apps are free from viruses or other harmful elements.

### Third Party Services

When viewing YouTube content via the SKF website(s) (i.e. using YouTube API Services), you agree to be bound by the YouTube Terms of Service.

### Copyright

Copyright in this website / app copyright of the information and software made available on this website / app rest with SKF or its licensors. All rights are reserved. All licensed material will reference the licensor that has granted SKF the right to use the material. The information and software made available on this website / app may not be reproduced, duplicated, copied, transferred, distributed, stored, modified, downloaded or otherwise exploited for any commercial use without the prior written approval of SKF. However, it may be reproduced, stored and downloaded for use by individuals without prior written approval of SKF. Under no circumstances may this information or software be supplied to third parties.

This website /app includes certain images used under license from Shutterstock, Inc.

### Trademarks and Patents

All trademarks, brand names, and corporate logos displayed on the website / app are the property of SKF or its licensors, and may not be used in any way without prior written approval by SKF. All licensed trademarks published on this website / app reference the licensor that has granted SKF the right to use the trademark. Access to this website / app does not grant to the user any license under any patents owned by or licensed to SKF.

### Changes

SKF reserves the right to make changes or additions to this website / app at any time.