Product Data Sheet

LPA-VPA 75K-FI

Light duty swivel castor, with top plate fitting, with brake system 'stop-fix', wheel, with solid rubber tyres, with synthetic rim

EAN 4047526226992
ID 226993
Customs tariff number 83022000

Made in Germany

Bracket: LPA series
- pressed steel, zinc-plated, blue-passivated, Cr6-free
- double ball bearing in the swivel head
- strong central kingpin
- minimum swivel head play and smooth rolling characteristic and increased service life due to the special dynamic Blickle riveting process

Wheel: VPA series
- tyre: high-quality solid rubber, hardness 80 Shore A, colour grey, non-marking, non-staining
- rim: high-quality nylon 6 or polypropylene in the electrically conductive version "-EL", impact resistant, colour black

Other features:
- high chemical resistance to many aggressive substances, except oils
- operating temperature: -20 °C to +60 °C, reduced load capacity over +30 °C

Technical data:

Wheel Ø (D)		75 mm
Wheel width		25 mm
Load capacity at 3 km/h		60 kg
Load capacity (static)		150 kg
Bearing type		ball bearing
Total height (H)		100 mm
Mounting type		top plate
Plate size		60 x 60 mm
Bolt hole spacing		38 x 38 / 48 x 48 mm
Bolt hole Ø		6.2 mm
Offset (F)		28 mm
Temperature resistance min		-20 °C
Temperature resistance max		60 °C
Tread and tyre hardness		80 Shore A
Unit weight		0.4 kg
Non-marking		✓
Non-staining		✓
Antistatic		✗
ESD		✗
Electrically conductive		✗
Corrosion-resistant		✗
Heat-resistant		✗
Suitable for autoclaves		✗
Suitable for machine washing		✗

Tread and tyre hardness
80 Shore A

Rolling resistance
good

Wear resistance
sufficient

Operating noise / floor surface preservation
very good

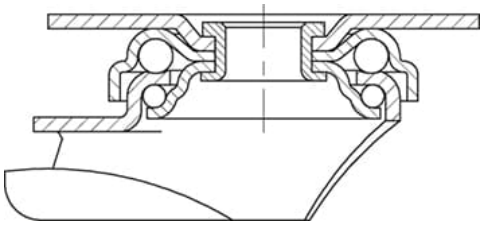

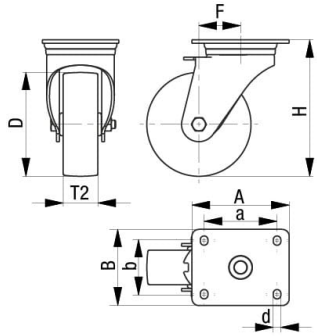

Product references

Corresponding fixed castor BPA-VPA 75K

Corresponding swivel castor LPA-VPA 75K

Wheel used VPA 75/6K