Low Power, High Sensitivity, I²C Ambient Light Sensor

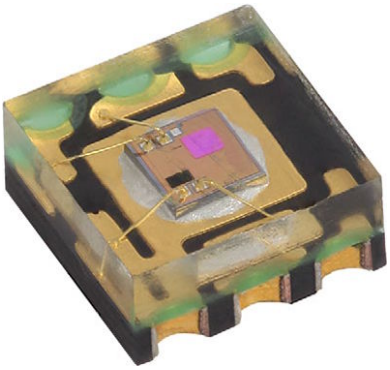

FEATURES

- Package type: surface-mount
- Dimensions (L x W x H in mm): 2 x 2 x 0.87
- Integrated modules: ambient light sensor (ALS)
- Supply voltage range V_{DD}: 2.6 V to 3.6 V
- Communication via I²C interface
- I²C bus H-level range: 1.7 V to 3.6 V
- Floor life: 168 h, MSL 3, according to J-STD-020
- Low stand by current consumption: typ. 1 μA
- Material categorization: for definitions of compliance please see www.vishay.com/doc?99912

Pb-free
e4
RoHS COMPLIANT
HALOGEN FREE
GREEN (5-2008)

DESCRIPTION

VEML3235 is an advanced ambient light sensor with I²C protocol interface and is designed by the CMOS process. It is easy to operate via a simple I²C command.

VEML3235 incorporates a photodiode, amplifiers, and analog circuits in a single chip. The best spectral sensitivity is used to closely capture real human eye responses. VEML3235 has excellent temperature compensation and the robust refresh rate setting does not need an external RC low pass filter. Software shutdown mode is provided, which reduces power consumption to be less than 1 μA. VEML3235's operating voltage ranges from 2.6 V to 3.6 V. VEML3235 can detect a wide range of ambient light power.

APPLICATIONS

- Handheld device
- Notebook
- Consumer device
- Industrial and medical application
- Computing, and industrial devices and displays

AMBIENT LIGHT FUNCTION

- High ALS sensitivity with minimum detectable intensity of 0.0021 lux/cnt supports low transmittance lens design
- Excellent temperature compensation
- High dynamic detection resolution
- Software shutdown mode control

PRODUCT SUMMARY

PART NUMBER	OPERATING VOLTAGE RANGE (V)	I²C BUS VOLTAGE RANGE (V)	AMBIENT LIGHT RANGE (lx)	AMBIENT LIGHT RESOLUTION (lx)	OUTPUT CODE	ADC RESOLUTION PROXIMITY / AMBIENT LIGHT
VEML3235	2.6 to 3.6	1.7 to 3.6	0.0021 to 17 867	0.0021	16 bit, I²C	- / 16 bit

ORDERING INFORMATION

ORDERING CODE	PACKAGING	VOLUME [1]	REMARKS
VEML3235	Tape and reel	MOQ: 3000	2.00 mm x 2.00 mm x 0.87 mm

Note

[1] MOQ: minimum order quantity

For technical questions, contact: sensorstechsupport@vishay.com
THIS DOCUMENT IS SUBJECT TO CHANGE WITHOUT NOTICE. THE PRODUCTS DESCRIBED HEREIN AND THIS DOCUMENT ARE SUBJECT TO SPECIFIC DISCLAIMERS, SET FORTH AT www.vishay.com/doc?91000

ABSOLUTE MAXIMUM RATINGS (T_{amb} = 25 °C, unless otherwise specified)					
PARAMETER	**TEST CONDITION**	**SYMBOL**	**MIN.**	**MAX.**	**UNIT**
Supply voltage		V_{DD}	0	4	V
Operation temperature range		T_{amb}	-25	+85	°C
Storage temperature range		T_{stg}	-25	+85	°C

BASIC CHARACTERISTICS (T_{amb} = 25 °C, unless otherwise specified)						
PARAMETER	**TEST CONDITION**	**SYMBOL**	**MIN.**	**TYP.**	**MAX.**	**UNIT**
Supply voltage		V_{DD}	2.6	3.3	3.6	V
Shut down current (1)	V_{DD} is 3.3 V	I_{sd}	-	1	-	µA
Supply current (1)	V_{DD} is 3.3 V	I_{DD}	-	250	-	µA
I^2C clock rate range		f_{SCL}	10	-	400	kHz
I^2C bus input H-level range	V_{DD} is 3.3 V	V_{ih}	1.2	-	-	V
I^2C bus input L-level range	V_{DD} is 3.3 V	V_{il}	0	-	0.4	V
Digital resolution (LSB count) (2)	With DG = x 2, Gain = x 4		-	0.0021	-	lx/step
Detectable minimum illuminance (2)	With DG = x 2, Gain = x 4	$E_{V\ min.}$	-	0.0021	-	lx
Detectable maximum illuminance (3)	With DG = x 1, Gain = x 1	$E_{V\ max.}$	-	17 867	-	lx

Notes

(1) V_{DD} = 3.3 V, temperature: 25 °C
(2) IT = 800 ms
(3) IT = 50 ms

CIRCUIT BLOCK DIAGRAM

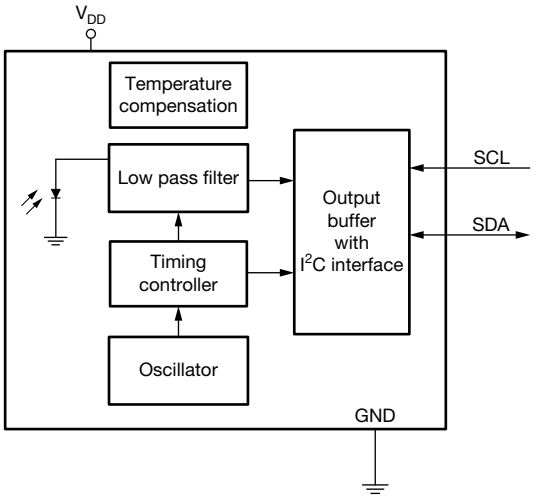

Fig. 1 - Block Diagram

For technical questions, contact: sensorstechsupport@vishay.com
THIS DOCUMENT IS SUBJECT TO CHANGE WITHOUT NOTICE. THE PRODUCTS DESCRIBED HEREIN AND THIS DOCUMENT ARE SUBJECT TO SPECIFIC DISCLAIMERS, SET FORTH AT www.vishay.com/doc?91000

I²C TIMING CHARACTERISTICS (T_{amb} = 25 °C, unless otherwise specified)						
PARAMETER	**SYMBOL**	**STANDARD MODE (1)**		**FAST MODE (1)**		**UNIT**
		MIN.	**MAX.**	**MIN.**	**MAX.**	
Clock frequency	$f_{(SMBCLK)}$	10	100	10	400	kHz
Bus free time between start and stop condition	$t_{(BUF)}$	4.7	-	1.3	-	µs
Hold time after (repeated) start condition; after this period, the first clock is generated	$t_{(HDSTA)}$	4.0	-	0.6	-	µs
Repeated start condition setup time	$t_{(SUSTA)}$	4.7	-	0.6	-	µs
Stop condition setup time	$t_{(SUSTO)}$	4.0	-	0.6	-	µs
Data hold time	$t_{(HDDAT)}$	-	3450	-	900	ns
Data setup time	$t_{(SUDAT)}$	250	-	100	-	ns
I²C clock (SCL) low period	$t_{(LOW)}$	4.7	-	1.3	-	µs
I²C clock (SCL) high period	$t_{(HIGH)}$	4.0	-	0.6	-	µs
Clock / data fall time	$t_{(F)}$	-	300	-	300	ns
Clock / data rise time	$t_{(R)}$	-	1000	-	300	ns

Note

(1) Data based on standard I²C protocol requirement, not tested in production

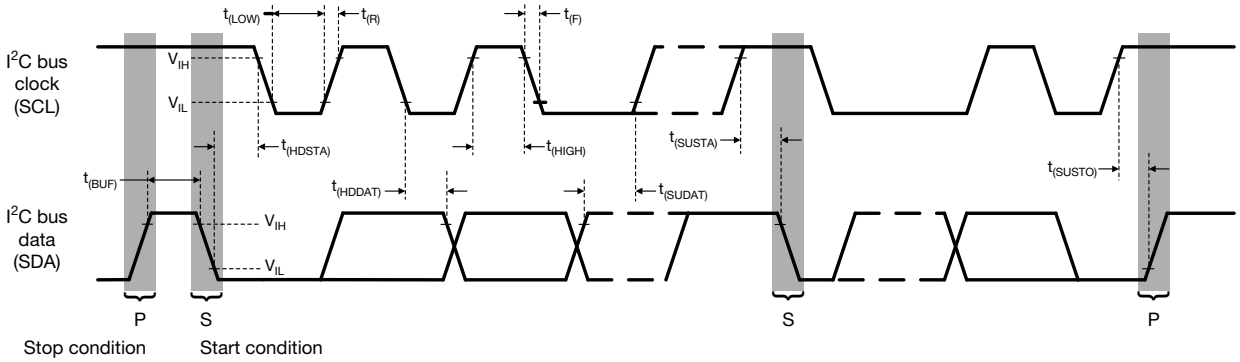

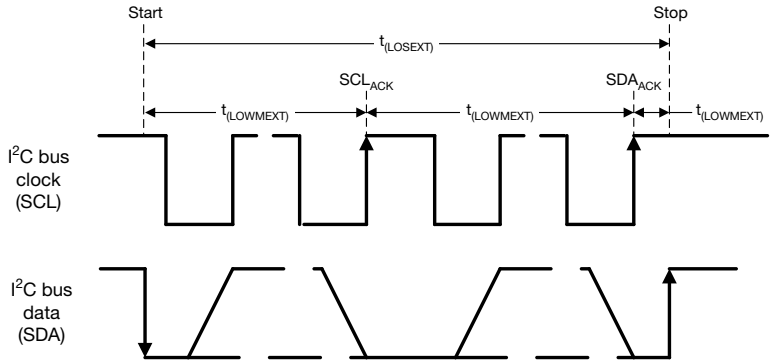

Fig. 2 - I²C Timing Diagram

For technical questions, contact: sensorstechsupport@vishay.com
THIS DOCUMENT IS SUBJECT TO CHANGE WITHOUT NOTICE. THE PRODUCTS DESCRIBED HEREIN AND THIS DOCUMENT ARE SUBJECT TO SPECIFIC DISCLAIMERS, SET FORTH AT www.vishay.com/doc?91000

PARAMETER TIMING INFORMATION

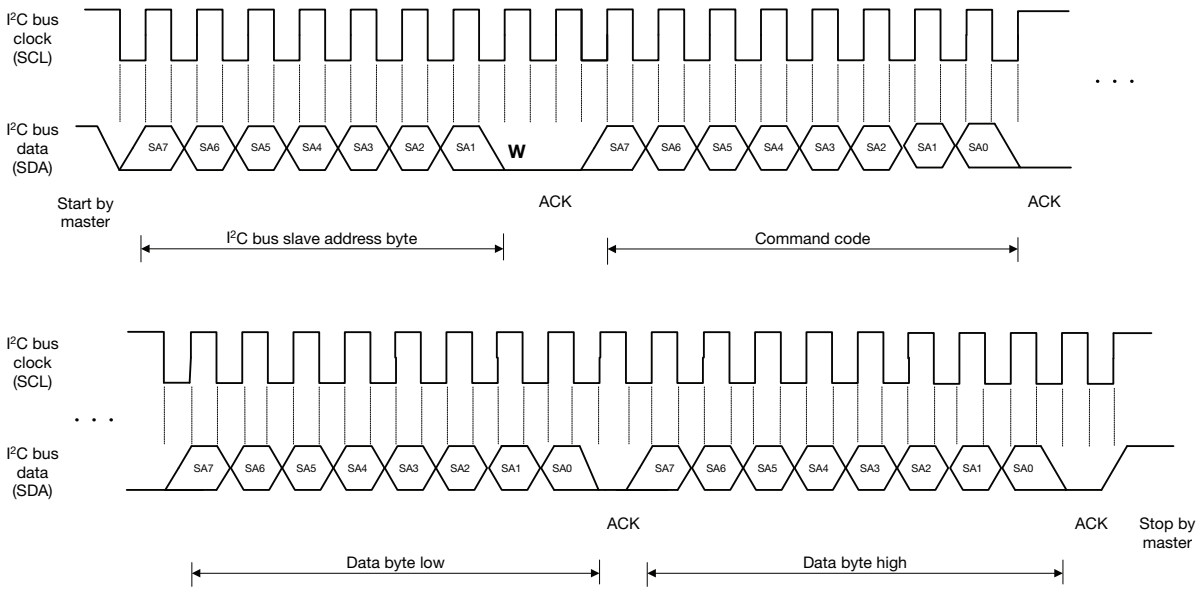

Fig. 3 - I²C Bus Timing for Sending Word Command Format

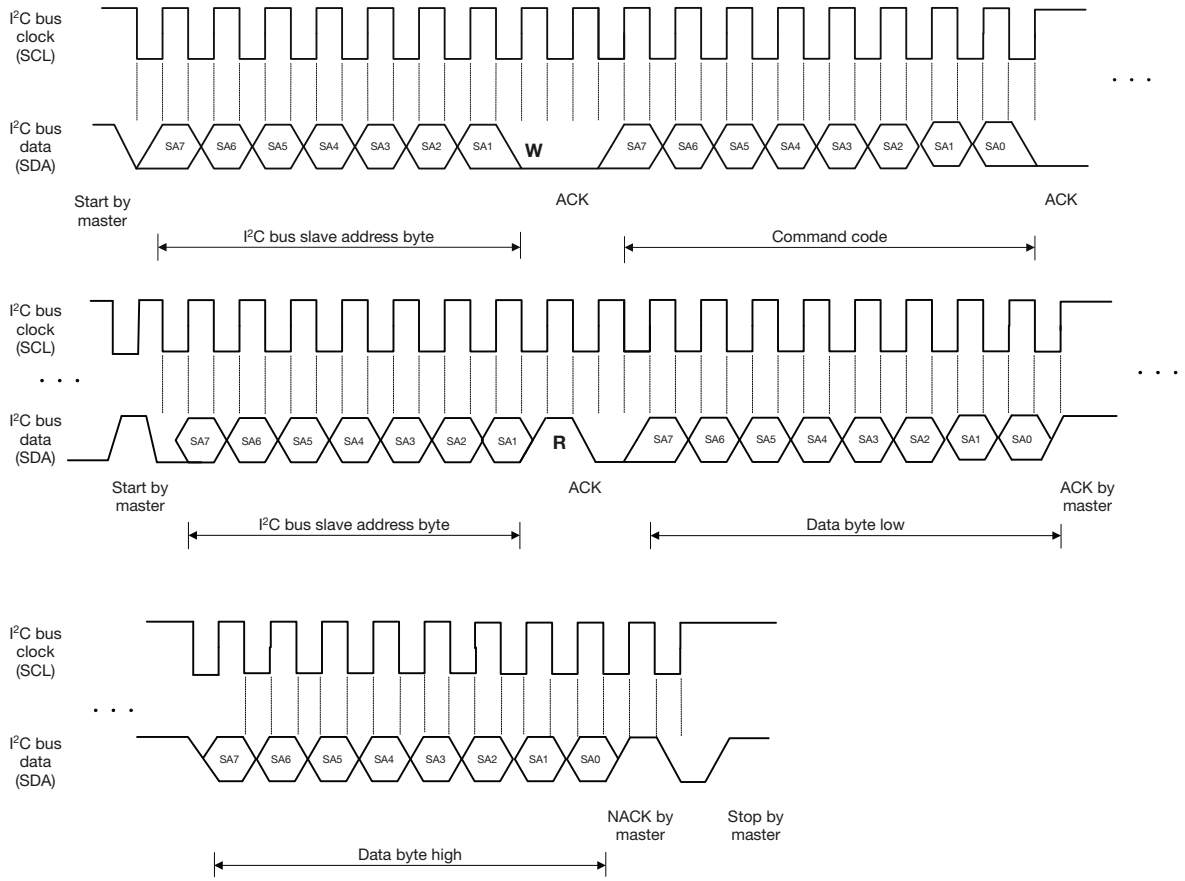

Fig. 4 - I²C Bus Timing for Receive Word Command Format

For technical questions, contact: sensorstechsupport@vishay.com
THIS DOCUMENT IS SUBJECT TO CHANGE WITHOUT NOTICE. THE PRODUCTS DESCRIBED HEREIN AND THIS DOCUMENT ARE SUBJECT TO SPECIFIC DISCLAIMERS, SET FORTH AT www.vishay.com/doc?91000

BASIC CHARACTERISTICS (T_{amb} = 25 °C, unless otherwise specified)

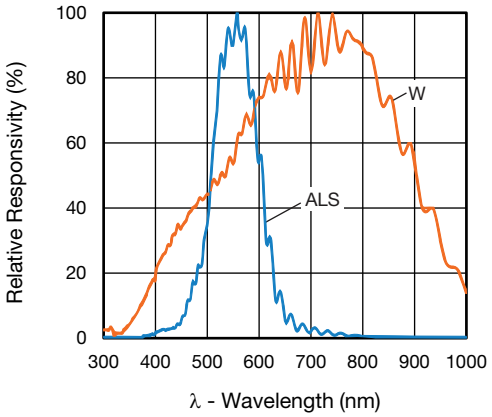

Fig. 5 - Normalized Spectral Response

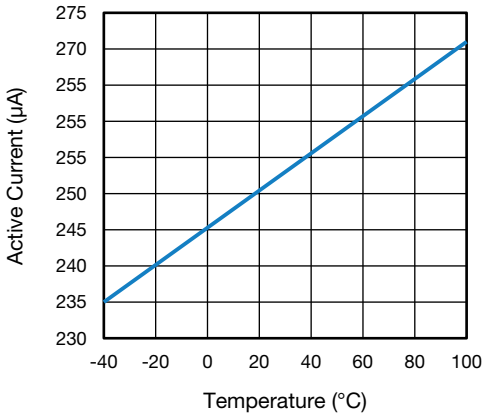

Fig. 7 - I_{DD} vs. Temperature Characteristics

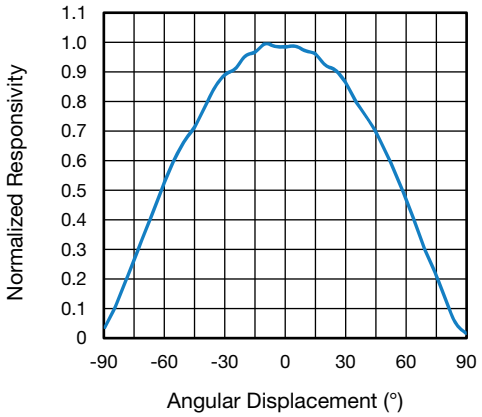

Fig. 6 - View Angle

For technical questions, contact: sensorstechsupport@vishay.com
THIS DOCUMENT IS SUBJECT TO CHANGE WITHOUT NOTICE. THE PRODUCTS DESCRIBED HEREIN AND THIS DOCUMENT ARE SUBJECT TO SPECIFIC DISCLAIMERS, SET FORTH AT www.vishay.com/doc?91000

APPLICATION INFORMATION

1. Pin Connection With the Host

VEML3235 is a cost effective solution with I²C interface. The standard serial digital interface easily accesses “light intensity” without using complex calculations and programming by an external controller.

The additional capacitor near the V_{DD} pin in the circuit is used for power supply noise rejection. The value is recommended at 0.1 µF. The pull-high resistors for the I²C bus design are recommended to be 2.2 kΩ.

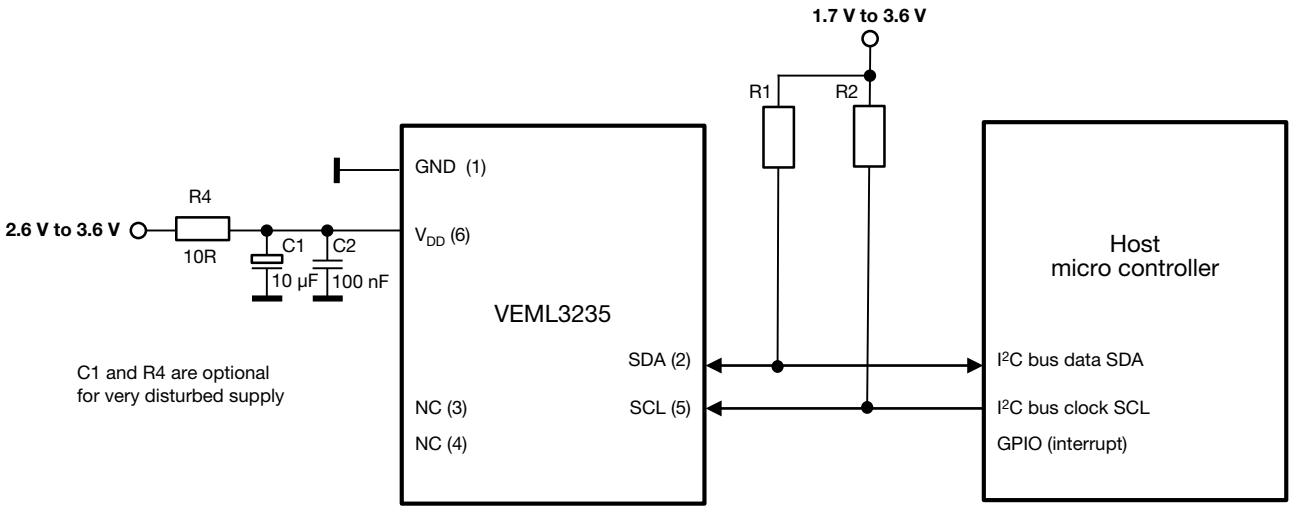

Fig. 8 - Hardware Pin Connection Diagram (Slave Address 0x10)

Digital Interface

VEML3235 contains a command register written via the I²C bus. All operations can be controlled by the command register. The simple command structure allows the user to easily program the operation setting and latch the light data from VEML3235. VEML3235’s I²C command format description for read and write operations between VEML3235 and the host is shown in Fig. 9. The white areas indicate the host activity and the gray areas indicate VEML3235’s acknowledgement of the host access activity.

Fig. 9 - Command Protocol Format

THIS DOCUMENT IS SUBJECT TO CHANGE WITHOUT NOTICE. THE PRODUCTS DESCRIBED HEREIN AND THIS DOCUMENT ARE SUBJECT TO SPECIFIC DISCLAIMERS, SET FORTH AT www.vishay.com/doc?91000

Command Register Format

VEML3235 uses 0x10 slave address for 7-bit I^2C addressing protocol. VEML3235 has 16-bit resolution for each channel (ALS and W).

TABLE 1 - COMMAND CODE DESCRIPTION

COMMAND CODE	REGISTER NAME	DATE BYTE LOW / HIGH	BIT	FUNCTION DESCRIPTION	R / W
0x00	Reserved	L	7	Set 0	R / W
	ALS/W_IT		6 : 4	ALS/W integration time setting (0 : 0 : 0) = 50 ms (0 : 0 : 1) = 100 ms (0 : 1 : 0) = 200 ms (0 : 1 : 1) = 400 ms (1 : 0 : 0) = 800 ms	
	AF		3	Auto / manual force mode	
	TRIG		2	0 = trigger not active, 1 = triggers a single measurement cycle	
	Reserved		1	Set 0	
	SD		0	Shutdown BG and LDO with SD = 1 (default)	
	SD0	H	7	Shutdown ALS and white channel with SD0 = 1 (default)	
	Reserved		6	Set 0	
	DG		5	0 = x 1, 1 = x 2	
	Gain		4 : 3	(0 : 0) = x 1 (0 : 1) = x 2 (1 : 0) = reserved (1 : 1) = x 4	
	Reserved		2 : 1	Set 0	
	Reserved		0	Set 1	
0x02	Reserved	L	7 : 0	Set 0	
	Reserved	H	7 : 0	Set 0	
0x04	W_LSB	L	7 : 0	W LSB data	R
	W_MSB	H	7 : 0	W MSB data	
0x05	ALS_LSB	L	7 : 0	ALS LSB data	
	ALS_MSB	H	7 : 0	ALS MSB data	
0x09	ID_L	L	7 : 0	ID part number: 3235 = 0011 0101	
	Reserved	H	7 : 0	Reserved	

For technical questions, contact: sensorstechsupport@vishay.com
THIS DOCUMENT IS SUBJECT TO CHANGE WITHOUT NOTICE. THE PRODUCTS DESCRIBED HEREIN AND THIS DOCUMENT ARE SUBJECT TO SPECIFIC DISCLAIMERS, SET FORTH AT www.vishay.com/doc?91000

Data Access

VEML3235 has 16-bit high resolution sensitivity for each channel. To represent the 16-bit data, it has to apply two bytes. One byte is for LSB and the other byte is for MSB. The host needs to follow the read word protocol. The data format shows as below.

TABLE 2 - 16-BIT DATA FORMAT

	VEML3235 16-BIT DATA FORMAT															
Data bit	15	14	13	12	11	10	9	8	7	6	5	4	3	2	1	0
Data byte low									◄	►						
Data byte high	◄	►														

Note

S	Slave address	Wr	A	Command code	A	S	Slave address	Rd	A	Data byte low	A	Data byte high	N	P

- Data byte low represents LSB and data byte high represents MSB

The table below shows these dependencies:

RESOLUTION AND MAXIMUM DETECTION RANGE AT DG = 1

	GAIN: x 4	GAIN: x 2	GAIN: x 1		GAIN: x 4	GAIN: x 2	GAIN: x 1
IT (ms)	TYPICAL RESOLUTION (lx/cnt)				MAXIMUM POSSIBLE ILLUMINATION (lx)		
800	0.00426	0.00852	0.01704		279	558	1117
400	0.00852	0.01704	0.03408		558	1117	2233
200	0.01704	0.03408	0.06816		1117	2233	4467
100	0.03408	0.06816	0.13632		2233	4467	8934
50	0.06816	0.13632	0.27264		4467	8934	17 867

RESOLUTION AND MAXIMUM DETECTION RANGE AT DG = 2

	GAIN: x 4	GAIN: x 2	GAIN: x 1		GAIN: x 4	GAIN: x 2	GAIN: x 1
IT (ms)	TYPICAL RESOLUTION (lx/cnt)				MAXIMUM POSSIBLE ILLUMINATION (lx)		
800	0.00213	0.00426	0.00852		140	279	558
400	0.00426	0.00852	0.01704		279	558	1117
200	0.00852	0.01704	0.03408		558	1117	2233
100	0.01704	0.03408	0.06816		1117	2233	4467
50	0.03408	0.06816	0.13632		2233	4467	8934

Example:

If the 16-bit word of the ALS data shows: 0000 0101 1100 1000 = 1480 (dec.), the programmed Gain = x 1, the digital gain DG = x 1 and the integration time is 100 ms, the corresponding lux level is: light level [lx] = 1480 x 0.13632 = 202 lx.

For detailed description about set-up and more application related information see application note: “Designing VEML3235 into an Application”.

THIS DOCUMENT IS SUBJECT TO CHANGE WITHOUT NOTICE. THE PRODUCTS DESCRIBED HEREIN AND THIS DOCUMENT ARE SUBJECT TO SPECIFIC DISCLAIMERS, SET FORTH AT www.vishay.com/doc?91000

PACKAGE INFORMATION in millimeters

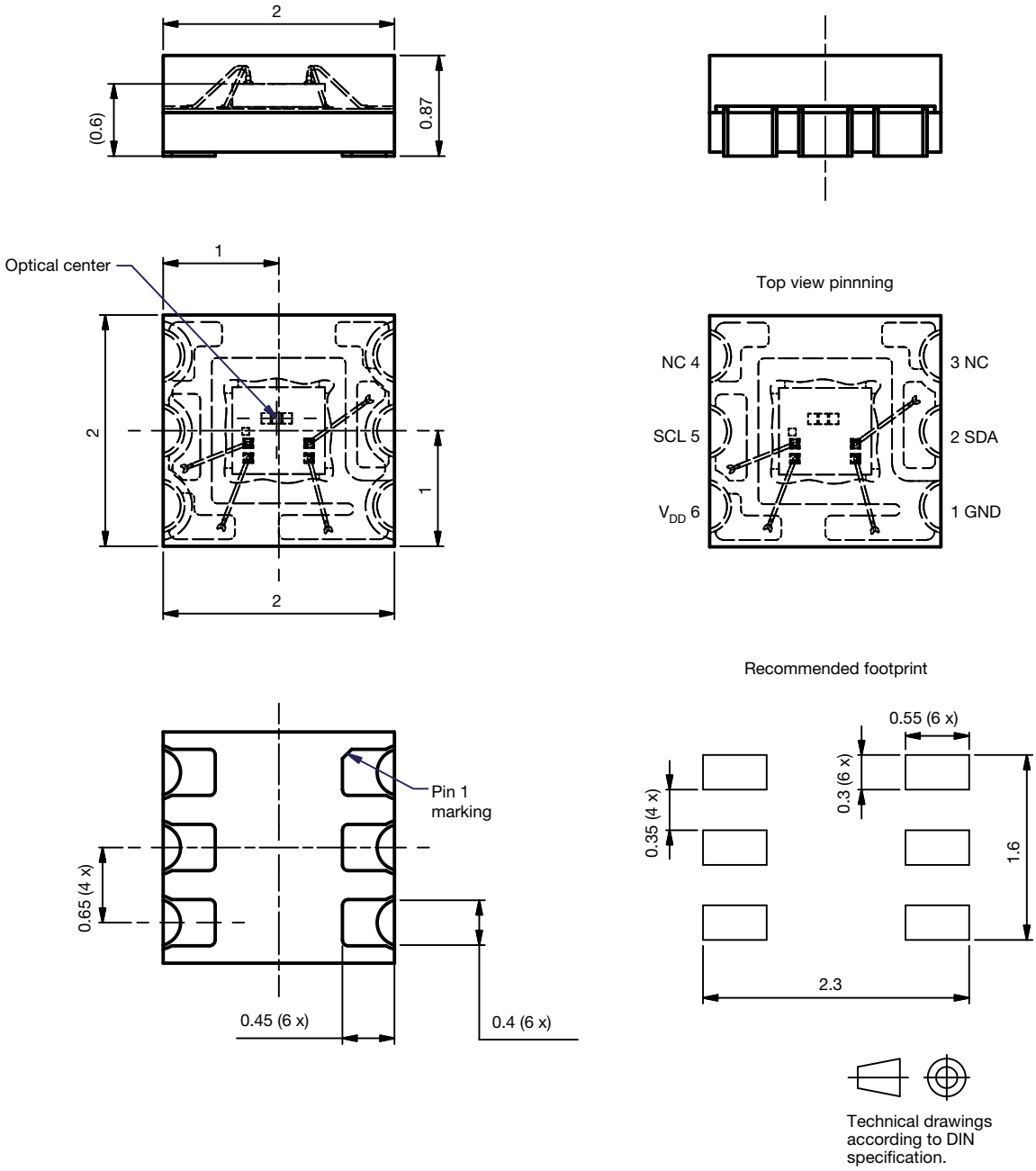

Drawing No.: AK-20.0014.00
Issue: preliminary 28.02.2019

Not indicated tolerances ± 0.1

Fig. 10 - VEML3235 A3OZ Package Dimensions

For technical questions, contact: sensorstechsupport@vishay.com
THIS DOCUMENT IS SUBJECT TO CHANGE WITHOUT NOTICE. THE PRODUCTS DESCRIBED HEREIN AND THIS DOCUMENT ARE SUBJECT TO SPECIFIC DISCLAIMERS, SET FORTH AT www.vishay.com/doc?91000

TAPE AND REEL DIMENSIONS in millimeters

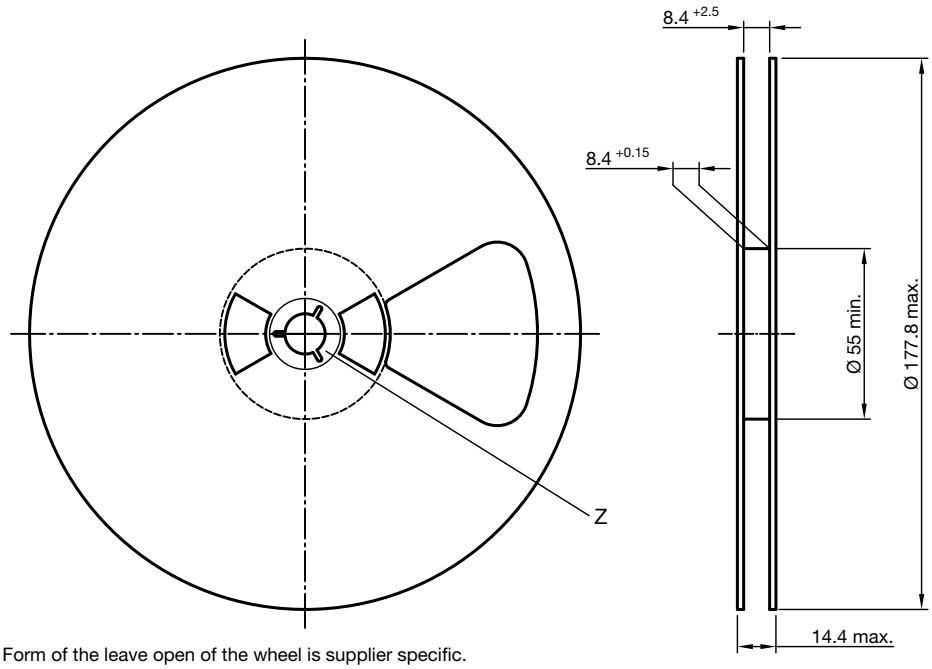

Form of the leave open of the wheel is supplier specific.

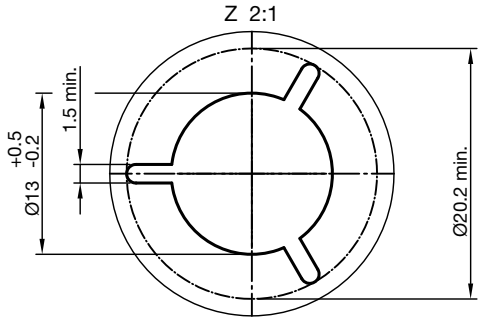

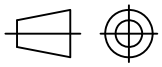

Technical drawings according to DIN specification.

Drawing-No.: 9.800-5096.01-4
Issue: 5; 20.12.2016

Fig. 11 - 7" Reel, 3000 Pieces

For technical questions, contact: sensorstechsupport@vishay.com
THIS DOCUMENT IS SUBJECT TO CHANGE WITHOUT NOTICE. THE PRODUCTS DESCRIBED HEREIN AND THIS DOCUMENT ARE SUBJECT TO SPECIFIC DISCLAIMERS, SET FORTH AT www.vishay.com/doc?91000

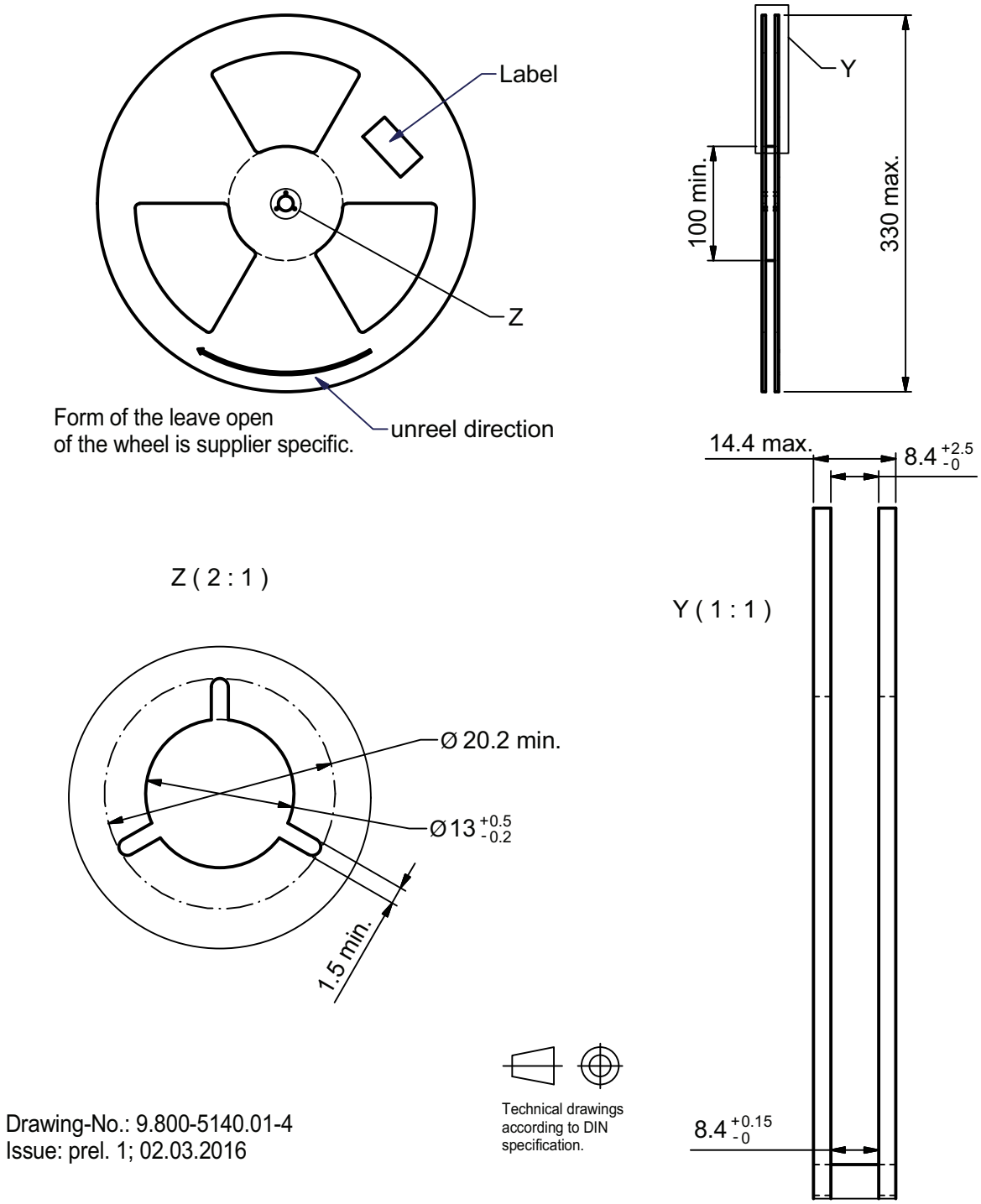

Fig. 12 - 13" Reel, 10 000 Pieces

For technical questions, contact: sensorstechsupport@vishay.com
THIS DOCUMENT IS SUBJECT TO CHANGE WITHOUT NOTICE. THE PRODUCTS DESCRIBED HEREIN AND THIS DOCUMENT
ARE SUBJECT TO SPECIFIC DISCLAIMERS, SET FORTH AT www.vishay.com/doc?91000

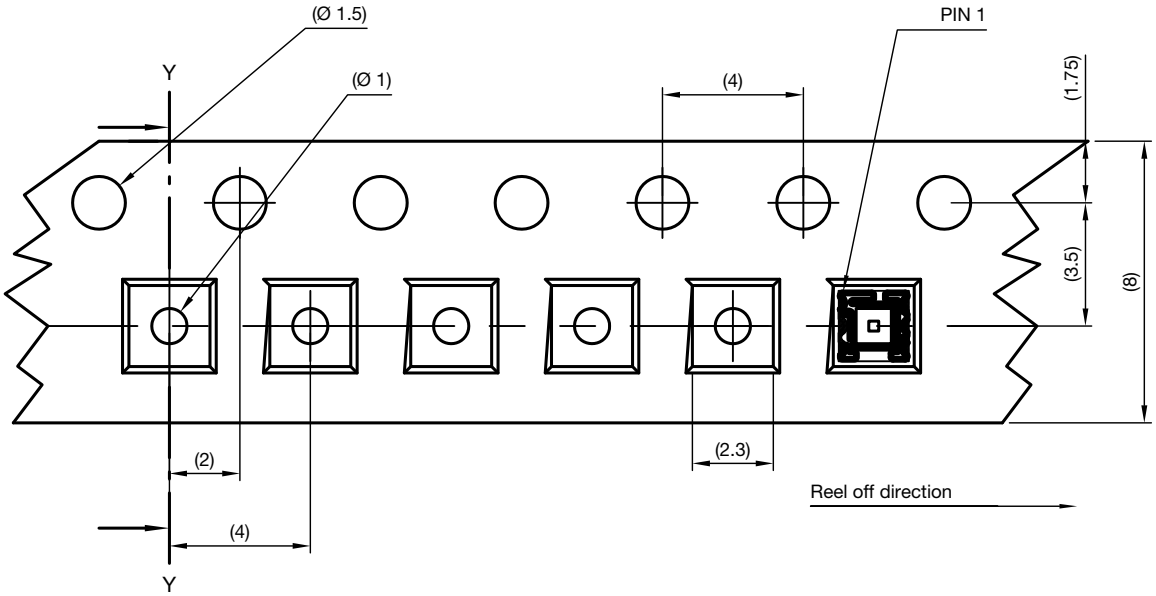

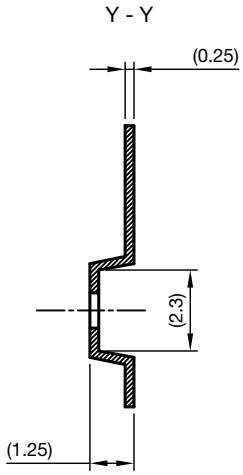

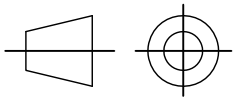

technical drawings
according to DIN
specifications

Drawing-No.: 9.700-5397.01-4
Issue: 1; 19.02.16

Fig. 13 - Taping

For technical questions, contact: sensorstechsupport@vishay.com
THIS DOCUMENT IS SUBJECT TO CHANGE WITHOUT NOTICE. THE PRODUCTS DESCRIBED HEREIN AND THIS DOCUMENT ARE SUBJECT TO SPECIFIC DISCLAIMERS, SET FORTH AT www.vishay.com/doc?91000

RECOMMENDED STORAGE AND REBAKING CONDITIONS				
PARAMETER	CONDITIONS	MIN.	MAX.	UNIT
Storage temperature		5	50	°C
Relative humidity		-	60	%
Open time		-	168	h
Total time	From the date code on the aluminized envelope (unopened)	-	12	months
Rebaking	Tape and reel: 60 °C	-	22	h
	Tube: 60 °C	-	22	h

RECOMMENDED INFRARED REFLOW

Soldering conditions which are based on J-STD-020 C

IR REFLOW PROFILE CONDITION			
PARAMETER	CONDITIONS	TEMPERATURE	TIME
Peak temperature		255 °C + 0 °C / - 5 °C (max.: 260 °C)	10 s
Preheat temperature range and timing		150 °C to 200 °C	60 s to 180 s
Timing within 5 °C to peak temperature		-	10 s to 30 s
Timing maintained above temperature / time		217 °C	60 s to 150 s
Timing from 25 °C to peak temperature		-	8 min (max.)
Ramp-up rate		3 °C/s (max.)	-
Ramp-down rate		6 °C/s (max.)	-

Recommend Normal Solder Reflow is 235 °C to 255 °C

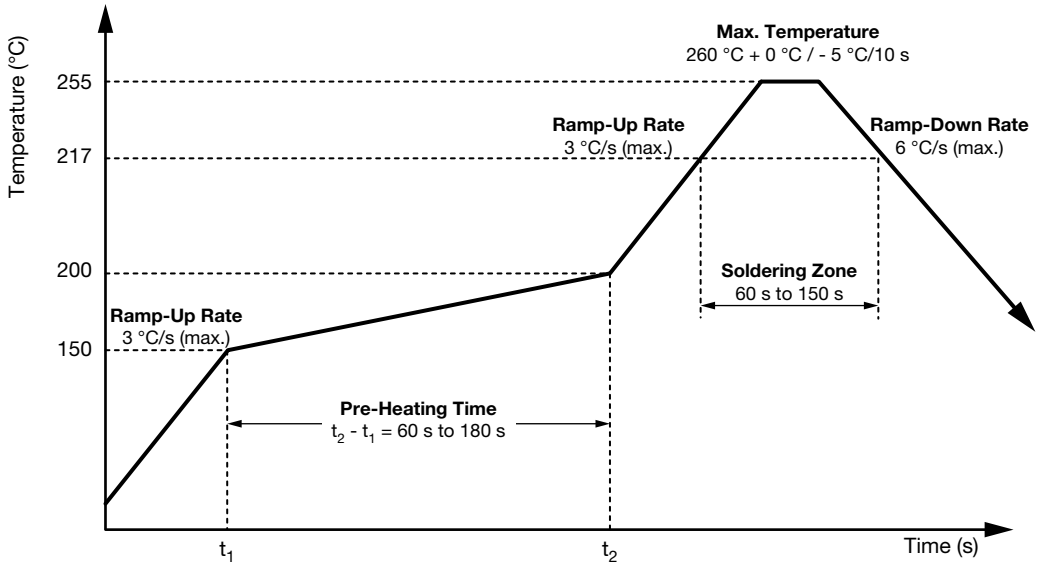

Fig. 14 - VEML3235SL Solder Reflow Profile Chart

For technical questions, contact: sensorstechsupport@vishay.com
THIS DOCUMENT IS SUBJECT TO CHANGE WITHOUT NOTICE. THE PRODUCTS DESCRIBED HEREIN AND THIS DOCUMENT ARE SUBJECT TO SPECIFIC DISCLAIMERS, SET FORTH AT www.vishay.com/doc?91000

DRYPACK

Devices are packed in moisture barrier bags (MBB) to prevent the products from moisture absorption during transportation and storage. Each bag contains a desiccant.

FLOOR LIFE

Floor life (time between soldering and removing from MBB) must not exceed the time indicated on MBB label:

Floor life: 168 h

Conditions: T_{amb} < 30 °C, RH < 60 %

Moisture sensitivity level 3, according to J-STD-020.

DRYING

In case of moisture absorption devices should be baked before soldering. Conditions see J-STD-020 or label. Devices taped on reel dry using recommended conditions 192 h at 40 °C (+ 5 °C), RH < 5 %.

For technical questions, contact: sensorstechsupport@vishay.com
THIS DOCUMENT IS SUBJECT TO CHANGE WITHOUT NOTICE. THE PRODUCTS DESCRIBED HEREIN AND THIS DOCUMENT ARE SUBJECT TO SPECIFIC DISCLAIMERS, SET FORTH AT www.vishay.com/doc?91000

Disclaimer

ALL PRODUCT, PRODUCT SPECIFICATIONS AND DATA ARE SUBJECT TO CHANGE WITHOUT NOTICE TO IMPROVE RELIABILITY, FUNCTION OR DESIGN OR OTHERWISE.

Vishay Intertechnology, Inc., its affiliates, agents, and employees, and all persons acting on its or their behalf (collectively, "Vishay"), disclaim any and all liability for any errors, inaccuracies or incompleteness contained in any datasheet or in any other disclosure relating to any product.

Vishay makes no warranty, representation or guarantee regarding the suitability of the products for any particular purpose or the continuing production of any product. To the maximum extent permitted by applicable law, Vishay disclaims (i) any and all liability arising out of the application or use of any product, (ii) any and all liability, including without limitation special, consequential or incidental damages, and (iii) any and all implied warranties, including warranties of fitness for particular purpose, non-infringement and merchantability.

Statements regarding the suitability of products for certain types of applications are based on Vishay's knowledge of typical requirements that are often placed on Vishay products in generic applications. Such statements are not binding statements about the suitability of products for a particular application. It is the customer's responsibility to validate that a particular product with the properties described in the product specification is suitable for use in a particular application. Parameters provided in datasheets and / or specifications may vary in different applications and performance may vary over time. All operating parameters, including typical parameters, must be validated for each customer application by the customer's technical experts. Product specifications do not expand or otherwise modify Vishay's terms and conditions of purchase, including but not limited to the warranty expressed therein.

Except as expressly indicated in writing, Vishay products are not designed for use in medical, life-saving, or life-sustaining applications or for any other application in which the failure of the Vishay product could result in personal injury or death. Customers using or selling Vishay products not expressly indicated for use in such applications do so at their own risk. Please contact authorized Vishay personnel to obtain written terms and conditions regarding products designed for such applications.

No license, express or implied, by estoppel or otherwise, to any intellectual property rights is granted by this document or by any conduct of Vishay. Product names and markings noted herein may be trademarks of their respective owners.

© 2021 VISHAY INTERTECHNOLOGY, INC. ALL RIGHTS RESERVED