Datasheet - RST16-1

Safety sensors / RSS260 / Actuator

(Minor differences between the printed image and the original product may exist!)

•
• Flat design
• Mounting 2 x M5

Ordering details

Product type description	RST16-1
Article number	103004336
EAN code	
notice	Sensor and actuator must be ordered separately.
eCl@ss	27-27-92-17

Approval

Approval	TÜV

Global Properties

Product name	Betätiger
Materials	
- Material of the actuator	Plastic
Weight	10 g
Recommended combinations	RSS 36, RSS 36 AS, RSS260, RSS260 AS

Mechanical data

Active area	front
with latching magnet (Y/N)	No

Dimensions

Dimensions of the actuators	
- Width of the actuator	60 mm
- Height of the actuator	6.8 mm
- Length of the actuator	16 mm

Documents

Mounting and wiring instructions (jp) 222 kB, 15.01.2015
Code: mrl_rst16-1-rss36_jp

Mounting and wiring instructions (es) 162 kB, 17.11.2014
Code: mrl_rst16-1-rss36_es

Mounting and wiring instructions (pt) 163 kB, 03.12.2014
Code: mrl_rst16-1-rss36_pt

Mounting and wiring instructions (nl) 163 kB, 25.03.2015
Code: mrl_rst16-1-rss36_nl

Mounting and wiring instructions (en) 164 kB, 21.11.2014
Code: mrl_rst16-1-rss36_en

Mounting and wiring instructions (pl) 197 kB, 03.12.2014
Code: mrl_rst16-1-rss36_pl

Mounting and wiring instructions (it) 163 kB, 18.11.2014
Code: mrl_rst16-1-rss36_it

Mounting and wiring instructions (fr) 161 kB, 03.12.2014
Code: mrl_rst16-1-rss36_fr

Mounting and wiring instructions (de) 164 kB, 14.11.2014
Code: mrl_rst16-1-rss36_de

Mounting and wiring instructions (sv) 163 kB, 27.05.2015
Code: mrl_rst16-1-rss36_sv

Mounting and wiring instructions (sv) 179 kB, 09.03.2015
Code: mrl_rst16-1_sv

Mounting and wiring instructions (es) 177 kB, 04.08.2014
Code: mrl_rst16-1_es

Mounting and wiring instructions (fr) 176 kB, 04.08.2014
Code: mrl_rst16-1_fr

Mounting and wiring instructions (pl) 213 kB, 30.06.2014
Code: mrl_rst16-1_pl

Mounting and wiring instructions (it) 175 kB, 30.06.2014
Code: mrl_rst16-1_it

Mounting and wiring instructions (en) 350 kB, 17.06.2014
Code: mrl_rst16-1_en

Mounting and wiring instructions (jp) 243 kB, 30.06.2014
Code: mrl_rst16-1_jp

Mounting and wiring instructions (de) 356 kB, 17.06.2014
Code: mrl_rst16-1_de

Mounting and wiring instructions (nl) 178 kB, 22.09.2014

Code: mrl_rst16-1_nl

Images

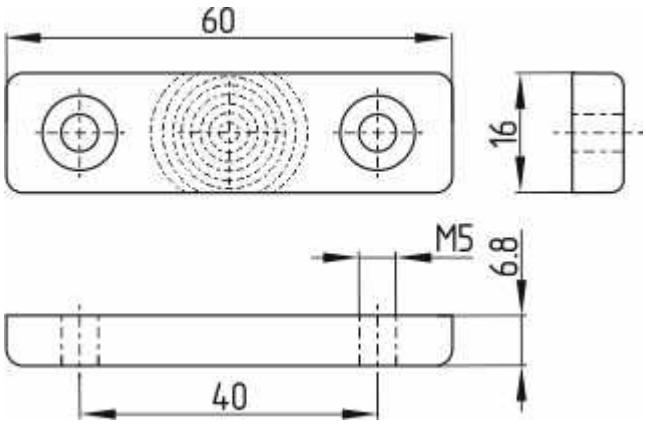

Dimensional drawing (basic component)

K.A. Schmersal GmbH & Co. KG, Möddinghofe 30, D-42279 Wuppertal
The data and values have been checked throroughly. Technical modifications and errors excepted.
Generiert am 30.05.2015 - 14:48:05h Kasbase 3.1.12.F.64I