SIEMENS

SIMATIC NET

TeleControl - RTU
SIMATIC RTU3030C/RTU30x1C

Operating Instructions

RTU3030C
RTU3031C
RTU3041C
RTU3051C

06/2025
C79000-G8976-C382-14

Preface

Security recommendations 1

Intended operating environment 2

Overview of functions 3

LEDs, connectors, buttons, QR code 4

Installation, wiring, commissioning, removal 5

Configuration (WBM) 6

Configuration (STEP 7) 7

Program blocks 8

Diagnostics, servicing, maintenance 9

Technical specifications 10

Approvals A

Dimension drawings B

Accessories C

Syslog Messages D

Ciphers used E

Documentation references F

Legal information

Warning notice system

This manual contains notices you have to observe in order to ensure your personal safety, as well as to prevent damage to property. The notices referring to your personal safety are highlighted in the manual by a safety alert symbol, notices referring only to property damage have no safety alert symbol. These notices shown below are graded according to the degree of danger.

⚠ DANGER
indicates that death or severe personal injury **will** result if proper precautions are not taken.

⚠ WARNING
indicates that death or severe personal injury **may** result if proper precautions are not taken.

⚠ CAUTION
indicates that minor personal injury can result if proper precautions are not taken.

NOTICE
indicates that property damage can result if proper precautions are not taken.

If more than one degree of danger is present, the warning notice representing the highest degree of danger will be used. A notice warning of injury to persons with a safety alert symbol may also include a warning relating to property damage.

Qualified Personnel

The product/system described in this documentation may be operated only by **personnel qualified** for the specific task in accordance with the relevant documentation, in particular its warning notices and safety instructions. Qualified persons are those who, because of their training and experience, are familiar with the installation, assembly, commissioning, operation, decommissioning and disassembly of the product and can recognize risks and avoid possible hazards.

Proper use of Siemens products

Note the following:

⚠ WARNING
Siemens products may only be used for the application described in the catalog and the associated usage information. If products and components from other manufacturers are used, these must be recommended or approved by Siemens. Proper transport, storage, installation, assembly, commissioning, operation and maintenance are required to ensure that the products operate safely and without any problems. The permissible ambient conditions must be complied with. The information in the relevant documentation must be observed.

Trademarks

All names identified by ® are registered trademarks of Siemens Aktiengesellschaft. The remaining trademarks in this publication may be trademarks whose use by third parties for their own purposes could violate the rights of the owner.

Disclaimer of Liability

We have reviewed the contents of this publication to ensure consistency with the hardware and software described. Since variance cannot be precluded entirely, we cannot guarantee full consistency. However, the information in this publication is reviewed regularly and any necessary corrections are included in subsequent editions.

Siemens Aktiengesellschaft
Digital Industries
Postfach 48 48
90026 NÜRNBERG
GERMANY

C79000-G8976-C382-14
Ⓟ 07/2025 Subject to change

Copyright © Siemens 2015 - 2025.
All rights reserved

Preface

⚠ CAUTION
Risk of injury To prevent injury, read the manual before use.

Validity of this manual

This manual is valid for the products:

SIMATIC RTU3030C
Article number: 6NH3112-3BA00-0XX0
Hardware product version 4
Firmware version 6.0

The RTU with integrated 3G modem (GSM/GPRS and UMTS are supported) is used to monitor and control remote stations that are geographically distributed and not connected to a power supply network. The RTU can store process data and transfer it via the wireless network or the LAN interface and an external router to a master station or the cloud.

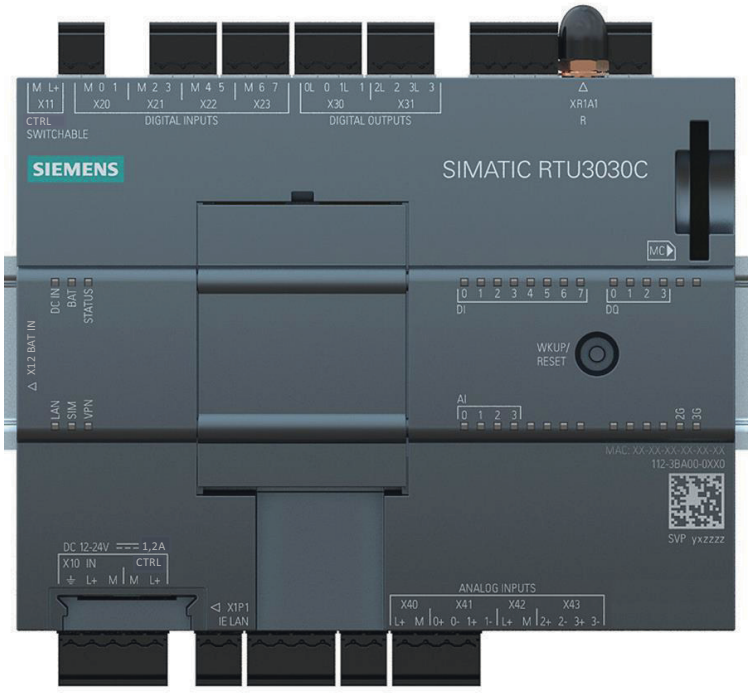

Figure 1 SIMATIC RTU3030C

SIMATIC RTU3031C
Article number: 6NH3112-3BB00-0XX0

Hardware product version 4
Firmware version 6.0

The RTU with integrated 3G modem (GSM/GPRS and UMTS are supported) is used to monitor and control remote stations that are geographically distributed and not connected to a power supply network. The RTU can store process data and transfer it via the wireless network or the LAN interface and an external router to a master station or the cloud.

As compared to the RTU3030C, the RTU3031C also has 4 additional digital outputs and supports GPS positioning and time synchronization.

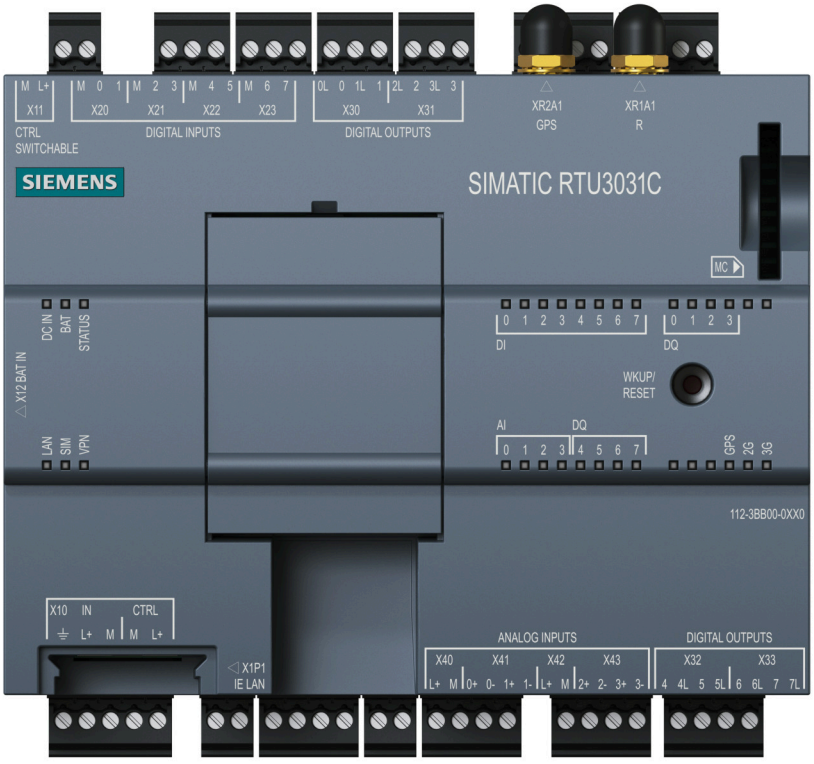

Figure 2 SIMATIC RTU3031C

SIMATIC RTU3041C
Article number: 6NH3112-4BB00-0XX0
Hardware product version 4
Firmware version 6.0

The RTU with integrated 4G modem (GSM/GPRS and LTE-M/NB-IoT are supported) is used to monitor and control remote stations that are geographically distributed and not connected to a power supply network. The RTU can store process data and transfer it via the wireless network or the LAN interface and an external router to a master station or the cloud.

The RTU3041C and the RTU3031C also have 4 additional digital outputs and support GPS positioning and time synchronization.

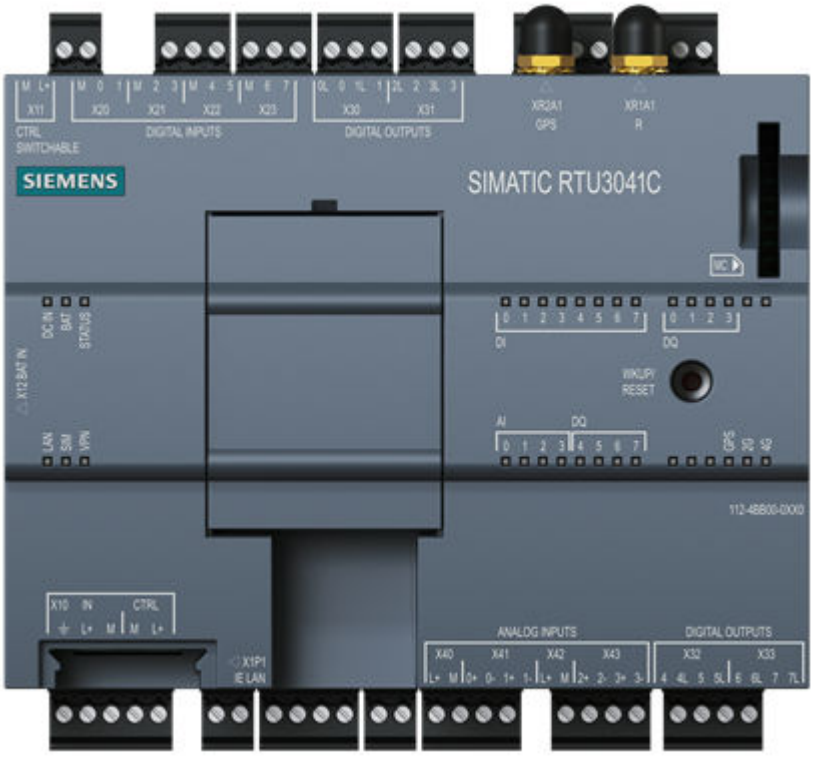

Figure 3 SIMATIC RTU3041C

You will find the article number of the device on the front right of the housing.

You will find the hardware product version of the device printed as a placeholder "X" on the right-hand side of the housing (e.g. 1 2 X 4). In this case, "X" would be the placeholder for hardware product version 3.

You will find the MAC address of the device on the front right of the housing.

You will find the IMEI (International Mobile Equipment Identity) on the right-hand side of the housing.

SIMATIC RTU3051C
Article number: 6NH3 112-5BB00-0XX0
Hardware product version 5
Firmware version 6.0

The RTU with integrated 4G modem (GSM/GPRS and LTE-M/NB-IoTv2 are supported) is used to monitor and control remote stations that are geographically distributed and not connected to a power supply network. The RTU can store process data and transfer it via the wireless network or the LAN interface and an external router to a master station or the cloud.

The RTU3051C also has four additional digital outputs and supports positioning and time synchronization via GNSS (e.g. GPS, GALILEO, BEIDOU).

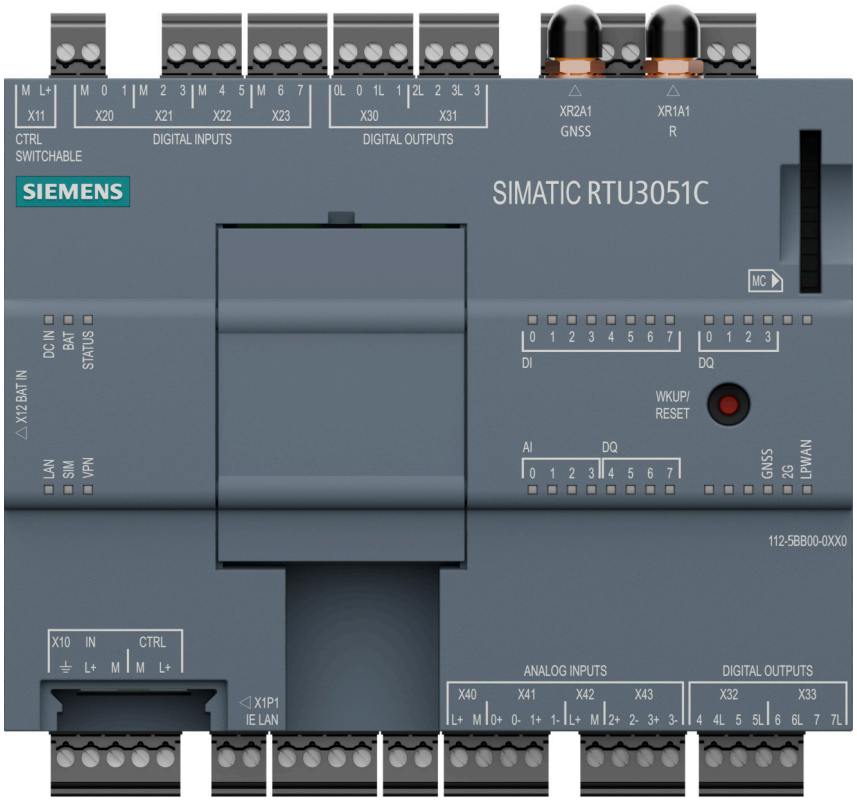

Figure 4 SIMATIC RTU3051C

You will find the article number of the device on the front right of the housing.

You will find the hardware product version of the device printed as a placeholder "X" on the right-hand side of the housing (e.g. 1 2 X 4). In this case, "X" would be the placeholder for hardware product version 3.

You will find the MAC address of the device on the front right of the housing.

You will find the IMEI (International Mobile Equipment Identity) on the right-hand side of the housing.

Purpose of the manual

This manual describes the properties of this device and shows application examples.

The manual supports you when installing, connecting up and commissioning the device.

The required configuration steps for the device are described.

You will also find instructions for operation and information about the diagnostics options.

Required experience

To install, commission and operate the device, you require experience in the following areas:

- General electrical engineering
- Automation engineering
- Cloud systems, MQTT
- Data transfer via mobile wireless networks and Internet

Abbreviations/acronyms

The following abbreviations/acronyms are used in this manual:

- **RTU**
  The name "RTU" (Remote Terminal Unit) is used instead of the full product names of the "RTU3010C", "RTU3011C", "RTU3030C", "RTU3031C", "RTU3041C" and "RTU3051C" devices.
- **RTU30x1C**
  Used as a substitute for the complete product names of the "RTU3011C", "RTU3031C", "RTU3041C" and "RTU3051C" devices.
- **RTU303xC**
  Used as a substitute for the complete product names of the "RTU3030C" and "RTU3031C" devices.
- **HW2**
  Stands for devices with hardware product version 2.
- **WBM**
  "WBM" the acronym for the "Web Based Management" of the Web pages of the RTU for configuration and diagnostics data.
- **Expansion card**
  The term "expansion card" is used instead of the full product name "EXTENSION BOARD HART / RS485".
- **TCSB**
  Acronym for the control center software "TeleControl Server Basic" which is installed on a PC, the telecontrol server.
- **SRC**
  The designation "SRC" is used as a substitute for the full product designation "SINEMA Remote Connect".
- **GPS**
  RTU3031C and RTU3041C support GPS (Global Positioning System), officially NAVSTAR GPS. Only GPS is mentioned in the manual, even when the support of GNSS is also meant for RTU3011C and RTU3051C.
- **GNSS**
  RTU3011C and RTU3051C support multiple Global Navigation Satellite Systems (GNSS).

New in this release

- Support of Radio Equipment Directive RED 3.3 (Article d-f) Cybersecurity

For the product notices on the Internet, see:
Link: (https://support.industry.siemens.com/cs/ww/en/ps/21767/pm)

Replaced edition

Edition 03/2025

Current manual release on the Internet

You will also find the current version of this manual on the Internet pages of Siemens Industry Online Support:

Link: (https://support.industry.siemens.com/cs/ww/en/ps/21767/man)

Cross references

In this manual there are often cross references to other sections.

To be able to return to the initial page after jumping to a cross reference, some PDF readers support the command <Alt>+<left arrow>.

Sources of information and other documentation

You will find an overview of further reading and references in the Appendix of this manual.

Information can be accessed via QR code

There is a QR code on the device via which you can call up a web page relating to the device which provides a great deal of information. Refer to section QR code (Page 78) for more on this.

License conditions

Note

Open source software

Read the license conditions for open source software carefully before using the product.

You will find the license conditions as a loadable file on the WBM pages of the device.
You will find the description of opening and loading license conditions in section General functions of the WBM (Page 114).

You can find the file with the license conditions for open source software under the following name:

- OSS_RTU30xxC_V60_86.zip

Recycling and disposal

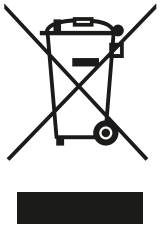

The products are low in pollutants, can be recycled and meet the requirements of the WEEE directive 2012/19/EU for the disposal of electrical and electronic equipment.

Do not dispose of the products at public disposal sites.

For environmentally friendly recycling and the disposal of your old device contact a certified disposal company for electronic scrap or your Siemens contact (Product return (https://support.industry.siemens.com/cs/ww/en/view/109479891)).

Note the different national regulations.

SIMATIC NET glossary

The SIMATIC NET glossary describes terms that may be used in this document.

You will find the SIMATIC NET glossary in the Siemens Industry Online Support at the following address:

Link: (https://support.industry.siemens.com/cs/ww/en/view/50305045)

Industry Online Support

In addition to the product documentation, you are supported by the comprehensive online information platform of Siemens Industry Online Support at the following Internet address:
Link: (https://support.industry.siemens.com/cs/de/en/)

Apart from news, there you will also find:

- Project information: Manuals, FAQs, downloads, application examples etc.
- Contacts, Technical Forum
- The option submitting a support query:
  Link: (https://support.industry.siemens.com/cs/my?lc=en-WW)
- Our service offer:
  Right across our products and systems, we provide numerous services that support you in every phase of the life of your machine or system - from planning and implementation to commissioning, through to maintenance and modernization.

You will find contact data on the Internet at the following address:
Link: (https://www.automation.siemens.com/aspa_app/?ci=yes&lang=en)

SITRAIN - Training for Industry

The training offer includes more than 300 courses on basic topics, extended knowledge and special knowledge as well as advanced training for individual sectors - available at more than 130 locations. Courses can also be organized individually and held locally at your location.

You will find detailed information on the training curriculum and how to contact our customer consultants at the following Internet address:

Link: (https://new.siemens.com/global/en/products/services/industry/sitrain/personal.html)

Industrial Networks Education

Training and certification for Industrial Networks

In our Industrial Networks Education courses you'll learn to design and implement wired and wireless data networks and connect them to a corporate network. You will also receive instruction on how to secure, diagnose and optimize communication networks. Certification can also be offered to supplement almost all training courses.

Link: (https://www.siemens.com/industrial-networks-education)

Cybersecurity notes

Siemens provides products and solutions with industrial cybersecurity functions that support the secure operation of plants, systems, machines and networks.

In order to protect plants, systems, machines and networks against cyber threats, it is necessary to implement – and continuously maintain – a holistic, state-of-the-art industrial cybersecurity concept. Siemens' products and solutions constitute one element of such a concept.

Customers are responsible for preventing unauthorized access to their plants, systems, machines and networks. Such systems, machines and components should only be connected to an enterprise network or the internet if and to the extent such a connection is necessary and only when appropriate security measures (e.g. firewalls and/or network segmentation) are in place.

For additional information on industrial cybersecurity measures that may be implemented, please visit
https://www.siemens.com/cybersecurity-industry (https://www.siemens.com/industrialsecurity).

Siemens' products and solutions undergo continuous development to make them more secure. Siemens strongly recommends that product updates are applied as soon as they are available and that the latest product versions are used. Use of product versions that are no longer supported, and failure to apply the latest updates may increase customer's exposure to cyber threats.

To stay informed about product updates, subscribe to the Siemens Industrial Cybersecurity RSS Feed under
https://new.siemens.com/cert (https://www.siemens.com/cert).

Table of contents

Preface **3**

1 Security recommendations **19**

1.1 Available services 22

2 Intended operating environment **27**

2.1 Application and use of the RTU 27

2.2 Functions and communication services 27

2.3 Security functions for communication 29

2.4 Configuration examples 31

3 Overview of functions **39**

3.1 Modes and operating modes 39

3.2 Wake-up call / wake-up SMS 42

3.3 Process connection - inputs / outputs 43

3.4 Control functions 44

3.5 Other services and properties 45

3.6 Performance data 46

3.7 Scope of delivery, accessories, requirements 51

3.8 Communications services 55

4 LEDs, connectors, buttons, QR code **63**

4.1 Appearance of the device 63

4.2 LEDs 64

4.3 Interfaces and connectors 69

4.4 The button "WKUP/RESET" 75

4.5 Slots for SIM card and SD card 76

4.6 QR code 78

5 Installation, wiring, commissioning, removal **81**

5.1 Important notes on using the device 81

5.1.1 Notes on use in hazardous areas 82

5.1.2 Notices for use in hazardous areas according to ATEX / UKEX / IECEx 85

5.1.3 Instructions for use in hazardous areas according to FM and UL HazLoc 86

5.1.4 Safety when connecting (devices without NEC Class 2) 86

5.1.5 Device defective 88

5.2 Installation 88

5.3 Connecting 91

5.3.1 Connecting devices to the extension board ... 92
5.3.1.1 Modbus devices ... 92
5.3.1.2 HART devices ... 93
5.3.2 Connecting up the RTU ... 95

5.4 Commissioning ... 101
5.4.1 Requirements for commissioning ... 101
5.4.2 Commissioning and starting up the RTU ... 102
5.4.3 Configuration via SINEC PNI ... 105
5.4.4 SD card / using and formatting SMC ... 106
5.4.5 Inserting the SIM card and SD card ... 107
5.4.6 Commissioning with SD card ... 108
5.4.7 Grounding and overvoltage protection ... 109

5.5 Maintenance and cleaning ... 110

5.6 Disassembly ... 111

6 Configuration (WBM) ... 113

6.1 Range of functions of the WBM ... 113

6.2 General functions of the WBM ... 114

6.3 Permitted characters and parameter lengths ... 116

6.4 Permissible file sizes for certificate and key files ... 122

6.5 Establishing the connection between RTU and configuration PC ... 123
6.5.1 Address data of the RTU ... 123
6.5.2 Establishing a connection to the WBM of the RTU ... 123

6.6 User data for the first login to the WBM ... 128

6.7 Logging in ... 129

6.8 Start page ... 130
6.8.1 Overview ... 130
6.8.2 Status ... 132

6.9 System ... 133
6.9.1 General ... 133
6.9.2 Device info ... 134
6.9.3 SD card ... 135
6.9.4 System time ... 137
6.9.5 System tags ... 141

6.10 Diagnostics ... 142
6.10.1 Diagnostics buffer ... 142
6.10.2 Configuration ... 143

6.11 Maintenance ... 144
6.11.1 Configuration ... 144
6.11.2 Firmware ... 149
6.11.3 FW update settings ... 152
6.11.4 Operating status ... 155
6.11.5 Online support ... 157

6.12 LAN ... 158
6.12.1 Overview ... 158

6.12.2 Configuration ... 159

6.13 WAN ... 161
6.13.1 Overview ... 161
6.13.2 Mobile wireless settings ... 163
6.13.3 Wireless cell ... 167
6.13.4 SMS ... 168
6.13.5 DynDNS ... 169

6.14 Services ... 170
6.14.1 Overview ... 170
6.14.2 E-mail ... 171
6.14.3 FTP ... 173

6.15 Security ... 176
6.15.1 Overview ... 176
6.15.2 VPN 1 / VPN 2 ... 177
6.15.3 WBM ... 182
6.15.4 Event buffer ... 185
6.15.5 Syslog ... 186

6.16 Users / groups ... 186
6.16.1 User ... 186
6.16.2 Recipient groups ... 190

6.17 Operating mode ... 192
6.17.1 Operating modes ... 192
6.17.2 Logging ... 194
6.17.3 Power supply ... 197
6.17.4 Battery service life ... 203
6.17.5 Batteries: Estimating the working life ... 204

6.18 Tags ... 205
6.18.1 Overview ... 205
6.18.2 Configuration of the tags, general parameters ... 206
6.18.3 Digital inputs ... 209
6.18.4 Digital outputs / Digital memory bits ... 211
6.18.5 Analog inputs ... 212
6.18.6 Analog memory bits ... 220
6.18.7 Temperature (Internal) ... 221
6.18.8 Power supply (external) ... 222
6.18.9 Battery ... 223
6.18.10 Texts ... 223

6.19 Extension board ... 225
6.19.1 RS-485 Modbus ... 228
6.19.2 HART ... 231
6.19.3 Devices ... 233
6.19.4 Tags ... 234

6.20 GPS (RTU30x1C) ... 240
6.20.1 General ... 240
6.20.2 Tags ... 241

6.21 Program ... 242
6.21.1 Creating the user program using program blocks ... 242
6.21.2 Library ... 243

6.22 Telecontrol and MQTT ... 243
6.22.1 Overview ... 243
6.22.2 Protocol-specific connection parameters ... 245
6.22.2.1 TeleControl Basic ... 245
6.22.2.2 ST7 und ST7-Backup ... 247
6.22.2.3 DNP3 ... 249
6.22.2.4 IEC 60870-5-104 ... 254
6.22.2.5 MQTT ... 258
6.22.3 Data points ... 261
6.22.3.1 Processing of process data ... 262
6.22.3.2 Data point table ... 263
6.22.3.3 Signal types, data types and data point types ... 268
6.22.3.4 Status IDs of the data points ... 269
6.22.4 Topics (only MQTT) ... 272

6.23 Tag tables ... 278
6.23.1 Overview ... 278

7 Configuration (STEP 7) ... 283

7.1 RTU ... 283

7.2 Kommunikationspartner ... 284

8 Program blocks ... 285

8.1 Block overview ... 285

8.2 Parameter assignment of the blocks ... 287

8.3 Often used parameters ... 289

8.4 Note for parameters ... 293

8.5 Blocks for logical functions ... 293
8.5.1 Logical AND ... 293
8.5.2 Logical OR ... 294
8.5.3 Exclusive OR (XOR) ... 295
8.5.4 Logical NOT ... 295

8.6 Blocks for basic types of calculation ... 296
8.6.1 Addition ... 296
8.6.2 Subtraction ... 297
8.6.3 Multiplication ... 298
8.6.4 Division ... 299

8.7 Blocks for time functions ... 300
8.7.1 On delay ... 300
8.7.2 Off delay ... 301
8.7.3 On/off delay ... 303
8.7.4 Retentive on delay ... 304
8.7.5 Pulse generator ... 306
8.7.6 Random on/off delay ... 306
8.7.7 Pulse sequence ... 307
8.7.8 Year timer ... 311
8.7.9 Week timer ... 314
8.7.10 Astronomical clock ... 315

8.8 Blocks for analog value functions ... 317
8.8.1 Triggered saving ... 317
8.8.2 Analog value monitoring ... 318
8.8.3 Limit value switch ... 319
8.8.4 Difference limit switch ... 321
8.8.5 Range monitoring ... 324
8.8.6 Analog value comparator ... 326
8.8.7 Min. /Max. /Mean value ... 327
8.8.8 Analog value processing ... 329
8.8.9 GPS position (RTU30x1C) ... 330
8.8.10 Statistics ... 332

8.9 Counter and summation blocks ... 335
8.9.1 Counters ... 335
8.9.2 Elapsed time counter ... 337
8.9.3 Frequency calculation ... 339
8.9.4 Flow calculation ... 340
8.9.5 Flow totalizer ... 341
8.9.6 Flow calculation rectangular weir ... 343
8.9.7 Silo volume calculation ... 345

8.10 Blocks for messages ... 347
8.10.1 Sending SMS messages ... 347
8.10.2 Send e-mail ... 348
8.10.3 FTP file transfer ... 349

8.11 Switch and relay blocks ... 352
8.11.1 Latching relays ... 352
8.11.2 Current impulse relay ... 354
8.11.3 Wiping relay ... 356
8.11.4 Time relay ... 358

8.12 Other blocks ... 360
8.12.1 Operating status ... 360
8.12.2 Operating mode ... 362
8.12.3 Formula ... 363
8.12.4 Script ... 366

9 Diagnostics, servicing, maintenance ... 373

9.1 Diagnostics options ... 373

9.2 Error detections for Telecontrol, e-mails and FTP ... 375

9.3 Loading firmware ... 378

9.4 Resetting to factory settings ... 379

9.5 Replacement ... 381
9.5.1 Replacing the RTU ... 381
9.5.2 Batteries: Replacement, recycling and disposal ... 381

10 Technical specifications ... 383

10.1 Resistance to harmful gases according to ISA-71.04 ... 391

A Approvals ... 393

B Dimension drawings ... 401

C Accessories ... 403

C.1 Battery module ... 403
C.1.1 Battery module and battery expansion module ... 403
C.1.2 Battery ... 407

C.2 Extension Board ... 409
C.2.1 EXTENSION BOARD HART / RS485 ... 409

C.3 SD card / SMC ... 412
C.3.1 Compatible SD cards ... 412
C.3.2 SIMATIC S7 Memory Card (SMC) ... 413

C.4 Antennas and accessories ... 414
C.4.1 Antenna ANT896-4ME ... 414
C.4.2 Antenne ANT897-4MA ... 414
C.4.3 Antenna ANT897-4ME ... 415
C.4.4 Antenna ANT794-4MR ... 416
C.4.5 Antenna ANT895-6ML (RTU30x1C) ... 417
C.4.6 Antenna accessories, screw connections ... 417

C.5 IP-based routers ... 419

C.6 Protective housing ... 420
C.6.1 Aluminum protective housing ... 420
C.6.2 Stainless steel protective housing ... 422

C.7 Overvoltage protection modules ... 424
C.7.1 Overvoltage protection module for the antenna cable ... 424
C.7.2 Overvoltage protection modules for supply and signal cables ... 425

D Syslog Messages ... 427

D.1 Structure of the Syslog Messages ... 427

D.2 Tags in Syslog Messages ... 428

D.3 Explanation of the messages ... 430

E Ciphers used ... 437

E.1 SSL ... 437

F Documentation references ... 439

F.1 /1/ ... 439

F.2 /2/ ... 439

F.3 /3/ ... 440

F.4 /4/ ... 440

F.5 /5/ ... 440

F.6 /6/ ... 440

F.7 /7/ ... 440

F.8 /8/ ... 441

F.9 /9/ 441
F.10 /10/ 441
Index 443

Security recommendations

1

NOTICE
Information security Connect to the device and change the default password for the factory-set user "admin" before you operate the device.

Note

Note that GNSS signals can also be manipulated or blocked by attackers.

To harden the device against security threats and prevent unauthorized access to the device and/or network, observe the following security recommendations.

General

- You should make regular checks to make sure that the device meets these recommendations and other internal security guidelines if applicable.
- Evaluate your plant as a whole in terms of security. Use a cell protection concept with suitable products.
- Use VPN to encrypt and authenticate communication from and to the devices.
- For data transmission via a non-secure network, use an encrypted VPN tunnel (OpenVPN).
- Check the user documentation of other Siemens products that are used together with the device for additional security recommendations.
- Using the syslog function, ensure that the system protocols are forwarded to a central syslog server or SIEM system. Make sure that the server is within the protected network and check the protocols regularly for potential security violations or vulnerabilities.
- Keep the firmware up to date. Check regularly for security updates of the firmware and use them.
  Link: (https://support.industry.siemens.com/cs/ww/en/ps/21766/pm)
  Check regularly for new features on the Siemens Internet pages.
  - You can find information on Industrial Security here:
    Link: (https://www.siemens.com/industrialsecurity)
  - You can find a selection of documents on the topic of network security here:
    Link: (https://support.industry.siemens.com/cs/ww/en/view/92651441)

  If Siemens detects and resolves security incidents in the products, this is published in Security Advisories. You can find the documents for RTU on the following Siemens AG web page:
  Link: (https://new.siemens.com/global/en/products/services/cert.html#SecurityPublications)

Physical access

- Restrict physical access to the device to qualified and authorized personnel.

Security functions of the product

Use the options for security settings in the configuration of the product. These include among others the following security function of the communication:

- Enable the security functions of the device.
  Think about the services you want to allow access to the station via public networks.
- The LAN interface of the product must not be operated in unprotected or untrusted networks (e.g. the Internet) without additional upstream protective devices.
- Use secure protocol variants such as HTTPS or TLS encryption with FTP and SMTP.
- Only operate syslog, SNTP and other non-secure protocols over secure connections (e.g. SINEMA RC/OpenVPN).

Authentication and users

Note

Accessibility risk - Risk of data loss

Do not lose the passwords for the device. Otherwise, access to the device can only be restored by resetting the device to factory settings, which completely removes all configuration data.

- Replace the default passwords for all user accounts before you use the device.
- Define rules for the use of devices and assignment of passwords. Follow current recommendations on defining strong passwords, e.g. by the German Federal Office for Information Security.
  Link: (https://www.bsi.bund.de)
- Use passwords with a high password strength. Avoid weak passwords, (e.g. password1, 123456789, abcdefgh) or recurring characters (e.g. abcabc).
  This recommendation also applies to symmetrical passwords/keys configured on the device.
- Make sure that all passwords are protected and inaccessible to unauthorized personnel.
- Do not use one password for different users and systems.
- Store the passwords in a safe location (not online) to have them available if they are lost.
- A password must be changed if it is known or suspected to be known by unauthorized persons.
- Watch out for link and network layer protocols that do not offer their own authentication between endpoints, such as ARP and ICMP. An attacker could use vulnerabilities in these protocols to attack hosts, switches and routers connected to your network, for example, through manipulation (poisoning) of the ARP caches of systems in the subnet and subsequent interception of the data traffic. Appropriate security measures must be taken for such non-secure protocols to prevent unauthorized access to the network. Physical access to the local network can be secured, for example.

Certificates and keys

- There is a preset SSL/TLS certificate for access to the WBM. Replace this certificate with a user-generated, high-quality certificate with key.
  Use a certificate signed by a reliable external or internal certification authority.
- Make sure that user-defined private keys are protected and inaccessible to unauthorized persons.
- If there is a suspected security violation, change all certificates and keys immediately.
- Verify certificates based on the fingerprint on the server side and client side to prevent "man in the middle" attacks. Use a second, secure transmission path for this.
- Before sending the device to Siemens for repair, replace the current certificates and keys with temporary disposable certificates and keys, which can be destroyed when the device is returned.
- The RTU does not perform a check for revoked certificates during certificate-based communication.
  Recommended measures:
  - Use certificates with a short lease time
    OR
  - Ensure prompt replacement of revoked certificates

  For OpenVPN communication, you can use automated certificate distribution in SINEMA RC.
- For the RTU to be able to correctly check digital certificates and establish secure connections, the system time always needs to be up to date. Follow the steps outlined below:
  Check and set time
  Check whether the buffered real-time clock of the RTU is set correctly, especially after a reset to factory settings or a long power supply interruption.
  If the real-time clock has not been set yet, the RTU automatically applies the current PC time on the first login to the WBM.
  Enable time-of-day synchronization (recommended)
  Activate one of the supported synchronization methods.
  Make sure that there is a stable connection to the synchronization partner so that the RTU can regularly receive the current time.

Protocols

Some protocols offer both a secure and a non-secure version for communication.

- Only activate protocols that you require to use the system.
- Use secure protocols when access to the device is not prevented by physical protection measures.
  The HTTP protocol provides a secure alternative with HTTPS.

Firmware

The firmware is signed and encrypted. This ensures that only firmware created by Siemens can be downloaded to the device.

Note on firmware/software support

Check regularly for new firmware/software versions or security updates and apply them. After the release of a new version, previous versions are no longer supported and are not maintained.

Decommissioning

Shut down the device properly to prevent unauthorized persons from accessing confidential data in the device memory.

To do this, restore the factory settings on the device.

1.1 Available services

The following tables provide you with an overview of the open ports on this device.

- **Service**
  Service that the device supports.
- **Protocol / Port number**
  Protocol and possibly port number assigned to the service.
- **Default setting of service**
  - Active
    The service is enabled at the start of configuration or after a reset to factory settings.
  - Disabled
    The service is disabled at the start of configuration or after a reset to factory settings.
- **Service / Port configurable**
  Specifies whether the service and possibly the port number can be configured via WBM.
- **Authentication**
  Specifies whether the communication partner is authenticated.
- **Encryption**
  Specifies whether the transfer is encrypted or whether the encryption can be configured.

Service tables

Table 1-1 Available services on the LAN interface

Service	Protocol / Port number	Default setting of service	Configurable		Authentication	Encryption[1)]
			Service	Port		
DCP-Identify	DCP	Active	--	--	--	--
DCP-RTF	DCP	Active	RTF[2)]	--	--	--
DCP-Set	DCP	Active	RTF[2)]	--	--	--
DCP-Signal	DCP	Active	--	--	--	--
DHCP client	UDP / 68	Disabled	✓	--	--	--
DHCP server	UDP / 67	Active	✓	--	--	--
DNP3 server	TCP+UDP / 20000	Disabled	✓	✓	Optional	--

Service	Protocol / Port number	Default setting of service	Configurable		Authentication	Encryption[1]
			Service	Port		
DNS client	UDP / 53	Disabled	✓	--	--	--
DNS server	UDP / 53	Active	✓	--	--	--
FTP client	TCP / 21 + 20	Disabled	✓	✓	✓	Optional
HART-IP server	TCP+UDP / 5094 + 20004	Disabled	✓	✓	--	--
HTTP server	TCP / 80	Disabled[3]	✓[3]	--	✓	--
HTTPS server	TCP / 443	Active	--	--	✓	✓
IEC 60870-5-104 server	TCP / 2404	Disabled	✓	✓	--	--
MAC address resolution	ARP	Active	--	--	--	--
Modbus/TCP server	TCP / 502	Disabled	✓	✓	--	--
MQTT client	TCP / 1883	Disabled	✓	✓	Optional	--
MQTT client TLS	TCP / 8883	Disabled	✓	✓	Optional	✓
OpenVPN client	UDP / 1194	Disabled	✓	✓	✓	✓
Ping	ICMP	Active	--	--	--	--
SINAUT ST7 client	TCP / 26382	Disabled	✓	✓	✓	✓
SINEMA RC client	TCP / 443	Disabled	✓	✓	✓	✓
SMTP client	TCP / 25	Disabled	✓	✓	✓	Optional
SNTP client	UDP / 123	Disabled	✓	--	--	--
Syslog client	UDP / 514	Disabled	✓	✓	--	--
TeleControl Basic client	TCP / 55097	Disabled	✓	✓	✓	✓

[1] You can find additional information on the encryption methods used in the appendix "Ciphers used".
[2] Only active in factory state (RTF)
[3] The HTTP port is always open. If the service is disabled, automatic HTTP forwarding to the HTTPS port takes place

Table 1-2 Available services on the WAN interface after activation of the interface

Service	Protocol / Port number	Default setting of service	Configurable		Authentication	Encryption[1]
			Service	Port		
DNP3 server	TCP+UDP / 20000	Disabled	✓	✓	Optional	--
DNS client	UDP / 53	Disabled	✓	--	--	--
DynDNS client	TCP / 443	Disabled	✓	--	✓	✓
FTP client	TCP / 21 + 20	Disabled	✓	✓	✓	Optional
HTTPS server	TCP / 443	Disabled	✓	--	✓	✓
IEC 60870-5-104 server	TCP / 2404	Disabled	✓	✓	--	--

Service	Protocol / Port number	Default setting of service	Configurable		Authentication	Encryption[1)]
			Service	Port		
MQTT client	TCP / 1883	Disabled	✓	✓	Optional	--
MQTT client TLS	TCP / 8883	Disabled	✓	✓	Optional	✓
OpenVPN client	UDP / 1194	Disabled	✓	✓	✓	✓
Ping	ICMP	Disabled	✓	--	--	--
SINAUT ST7 client	TCP / 26382	Disabled	✓	✓	✓	✓
SINEMA RC client	TCP / 443	Disabled	✓	✓	✓	✓
SMS	SS7 + IMS	Disabled	✓	--	--	--
SMTP client	TCP / 25	Disabled	✓	✓	✓	Optional
SNTP client	UDP / 123	Disabled	✓	--	--	--
Syslog client	UDP / 514	Disabled	✓	✓	--	--
TeleControl Basic client	TCP / 55097	Disabled	✓	✓	✓	✓

[1)] You can find additional information on the encryption methods used in the appendix "Ciphers used".

Table 1-3 Available services in the tunnel of the VPN interface after activation of the interface

Service	Protocol / Port number	Default setting of service	Configurable		Authentication	Encryption[1)]
			Service	Port		
DNP3 server	TCP+UDP / 20000	Disabled	✓	✓	Optional	--
FTP client	TCP / 21 + 20	Disabled	✓	✓	✓	Optional
HART-IP server	TCP+UDP / 5094 + 20004	Disabled	✓	✓	--	--
HTTP server	TCP / 80	Disabled[2)]	✓[2)]	--	✓	--
HTTPS server	TCP / 443	Active	--	--	✓	✓
IEC 60870-5-104 server	TCP / 2404	Disabled	✓	✓	--	--
Modbus/TCP server	TCP / 502	Disabled	✓	✓	--	--
MQTT client	TCP / 1883	Disabled	✓	✓	Optional	--
MQTT client TLS	TCP / 8883	Disabled	✓	✓	Optional	✓
Ping	ICMP	Active	--	--	--	--
SINAUT ST7 client	TCP / 26382	Disabled	✓	✓	✓	✓
SMTP client	TCP / 25	Disabled	✓	✓	✓	Optional
SNTP client	UDP / 123	Disabled	✓	--	--	--

Service	Protocol / Port number	Default setting of service	Configurable		Authentication	Encryption[1]
			Service	Port		
Syslog client	UDP / 514	Disabled	✓	✓	--	--
TeleControl Basic client	TCP / 55097	Disabled	✓	✓	✓	✓

[1] You can find additional information on the encryption methods used in the appendix "Ciphers used".
[2] The HTTP port is always open. If the service is disabled, automatic HTTP forwarding to the HTTPS port takes place.

Intended operating environment 2

2.1 Application and use of the RTU

Applications

The RTU is intended for monitoring and controlling small outlying stations without a connection to a power supply network.

In telecontrol networks or cloud systems, the RTU is used to connect the outlying stations to the master station or cloud via mobile wireless or via the LAN interface of the RTU and an optional external router.

You will find a selection of routers in the appendix IP-based routers (Page 419)

You can protect the remote station with use of the LAN interface through the firewall functionality of a SCALANCE M or through the use of encrypted access via OpenVPN, for example.
You can find specific configuration examples of the automation cells to be connected, including system sketches, in the section Configuration examples (Page 31).

2.2 Functions and communication services

Core functions

The RTU supports the following core functions:

- **Energy-saving operation**
  Thanks to the energy-saving operation with various operating modes (see below), the RTU is predestined for use in geographically distributed outlying stations, measuring points and other applications without connection to a power supply network.
  The RTU can be supplied with auxiliary power via the following power sources:
  - Battery modules
    Battery modules are available as accessories, see Appendix Battery module (Page 403).
  - External power source e.g. solar modules
- **Process connection**
  For the process connection, the RTU is equipped with inputs and outputs:
  - 8 x DI (digital inputs)
  - 4 x DQ (digital outputs)
  - 4 x AI (analog inputs)
  - Up to 32 x DI/AI/DQ/AQ via the expansion card
- **Controller**
  For simple control tasks, the process data can be linked via program blocks.

- **Storing process data (Logging)**
  The RTU provides the option of storing the process data of the connected sensors and the values of some internal parameters on an SD card.
  Use this option when there is no communication partner in the master station or cloud for the RTU.
  You can also use the function when you transfer the process data to the master station or cloud (optional).
- **Communication with the control room**
  If a communication partner is available in the master station, the RTU can send process data to the control room. The data is transferred either via the mobile wireless service or via LAN (optionally with an external router).
- **Telecontrol protocols and cloud communication**
  For communication with the master station, the RTU supports the following protocols:
  - TeleControl Basic
  - SINAUT ST7
  - DNP3
  - IEC 60870-5-104
  - MQTT according to OASIS standard version 3.1.1

  You will find detailed information about the protocols in the section Communications services (Page 55).
- **Position determination and time synchronization via GPS (RTU30x1C)**
  The exact position of the RTU can be monitored via GPS and, for example, an alarm can be triggered if the RTU moves outside a defined range.
  High-precision time-of-day synchronization via GPS is also possible.

Configuration examples

You will find configurations of the RTU in the section Configuration examples (Page 31).

Configuration and programming of the RTU in the WBM

Configuration

You configure the parameters of the RTU itself, its inputs and outputs, control functions and communication parameters conveniently in the Web Based Management (WBM). The WBM consists of Web pages stored on the RTU. From a configuration PC you connect to the WBM.

Programming

You program in the WBM with the following actions:

- Keyboard entries
- Selection of options in drop-down lists
- Enabling check boxes
- Working with buttons ("Apply", "Add", "Load", "Search" etc.)

2.3 Security functions for communication

Security functions for SMS messages, e-mails and FTP

As general protection the RTU supports the following functions:

- **Configuration of authorized phone numbers on the RTU**
  To authorize subscribers that are allowed to establish connection with the RTU by SMS message or phone call, the phone numbers of the individual subscribers are configured on the RTU.
- **Encryption**
  For the secure transfer of e-mails and for FTP file transfer the following optional methods can be used:
  - TLS via STARTTLS (for e-mail)
  - TLS (for FTP)

  A certificate is required when these options are used.
  Ask your service provider which options are supported.

Security functions of the "TeleControl Basic" protocol

The protocol contains the following Security functions:

- **Encrypted communication with the Telecontrol server**
  As an integrated security function, the telecontrol protocol encrypts the data for transfer between the RTU and telecontrol server.
  The interval for the key exchange between RTU and telecontrol server is set to 1 hour.
- **Telecontrol password**
  For authentication of the RTU at the telecontrol server

When VPN connections are used or when a security module SCALANCE S/M is used, the encryption of the protocol is turned off. If the connection leads over further routers as of the tunnel endpoint, make sure that you secure this communication with a security module.

Security functions of the "SINAUT ST7" protocol

The RTU uses the transfer protocol "MSCsec" for secure communication.

Security functions of the "DNP3" protocol

The protocol provides optionally configurable authorization of the communication partner according to DNP3 Secure Authentication V5.

Security functions of the "MQTT" protocol

- TLS encryption via client and server certificates
- User name and password are possible when logging in to the broker

OpenVPN

For different connections, the RTU uses the VPN technology of OpenVPN. Between the RTU and the connection partner, a VPN tunnel is established via an open VPN server and the RTU is the OpenVPN client. The RTU can establish two VPN tunnels to different OpenVPN servers at the same time.

The RTU can use the security functions of the "OpenVPN" service for the following connections:

- Connections of the RTU to a DNP3 master
- Connections of the RTU to an IEC master
- Connections of the RTU with up to two ST7 partners
- Connections of the RTU to the telecontrol server
- Connections of the RTU with a Syslog server
- Connections of the RTU with an MQTT broker
- FTP file transfer
- E-mail
- Connections of a configuration PC to the RTU via the Internet and the mobile wireless network
  No OpenVPN is required for the connection of a service PC to the RTU via the Web server of TCSB.
- SNTP
- HART-IP
- Modbus/TCP

An OpenVPN server is required to establish the connections listed above (see below).

OpenVPN is implemented on the RTU as a TUN device (routing mode). The following security functions are supported:

- Encryption
  The data to be transferred is encrypted with the CBC method. As standard, AES-256 or AES-128 can be used.
- Authentication of the connection partner
  SHA-256 can be used as hash algorithms for authenticating the user data.

The RTU uses OpenVPN version 2.6.8.

OpenVPN server

Requirement for operation of the RTU on an OpenVPN server:

- Support of clients with OpenVPN version 2.6.8
- Support of TLS version 1.2
- Accessibility of the OpenVPN server by means of UDP transport protocol

The OpenVPN server must support the following functions:

- OpenVPN V2.3.11 or higher
- Configuration of the server for TLS version 1.2
- Use of "tls-version-min 1.0" in the OpenVPN configuration

As an option you can configure the following OpenVPN servers:

- An OpenVPN server of your choice as of version 2.3.3
- The Siemens application "SINEMA Remote Connect - Server" (SINEMA RC Server) as of version V1.3
  If SINEMA RC Server is used as the OpenVPN server, the RTU and the communication partner of the RTU must be configured in SINEMA RC Server as an OpenVPN client. The RTU and the communication partner of the RTU log on as OpenVPN clients with SINEMA RC Server.
  For the manuals, see /5/ (Page 440) and /7/ (Page 440).

SINEMA RC Server is recommended.

Configuring the OpenVPN functions

- You will find details on using HTTP for connections between the configuration PC and RTU in the section Establishing a connection to the WBM of the RTU (Page 123).
  There you will also find instructions on establishing an OpenVPN connection from the configuration PC.
- For a description of the configuration of the OpenVPN properties of the RTU, refer to the section VPN 1 / VPN 2 (Page 177).

2.4 Configuration examples

Below, you will find configuration examples for applications of the RTU.

You will find references to the configuration of individual communications functions in the section Communications services (Page 55).

You will find a diagram of the configuration of the configuration PC that accesses the WBM of the RTU using HTTP and OpenVPN in the section Establishing a connection to the WBM of the RTU (Page 123).

SMS / E-mail / FTP

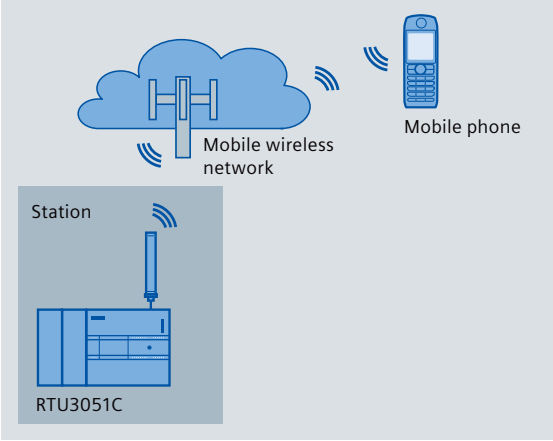

Figure 2-1 Sending SMS messages by the RTU

Sending SMS messages / e-mail

The RTU can send messages (SMS / e-mails) for configurable events via program blocks or using the logging function.

After a request from a cell phone, a diagnostics SMS message can be sent.

In the attachment of e-mails, you have the option of transferring the process image, the diagnostics buffer or the current log file.

Receiving SMS messages

The RTU can be wakened out of sleep mode by the telecontrol server or by the SMS message of a cell phone to establish a connection to the communication partner.

All cell phones that are permitted to send a wake-up SMS message or the request for a diagnostics SMS message to the RTU, must be enabled with the phone number of every user in the WBM of the RTU ("Wake-up call allowed").

FTP file transfer

The RTU can transfer files to an FTP server in the LAN or reachable via the Internet via an FTP block. The current log file, the entire process image or the diagnostics buffer can be transferred.

Telecontrol with the "TeleControl Basic" protocol

In the following example the RTU uses the "TeleControl Basic" protocol and communicates via the mobile wireless network and the Internet with the telecontrol server (TCSB) in the master station.

Using its integrated OPC server, the telecontrol server exchanges data with the OPC client of the control center.

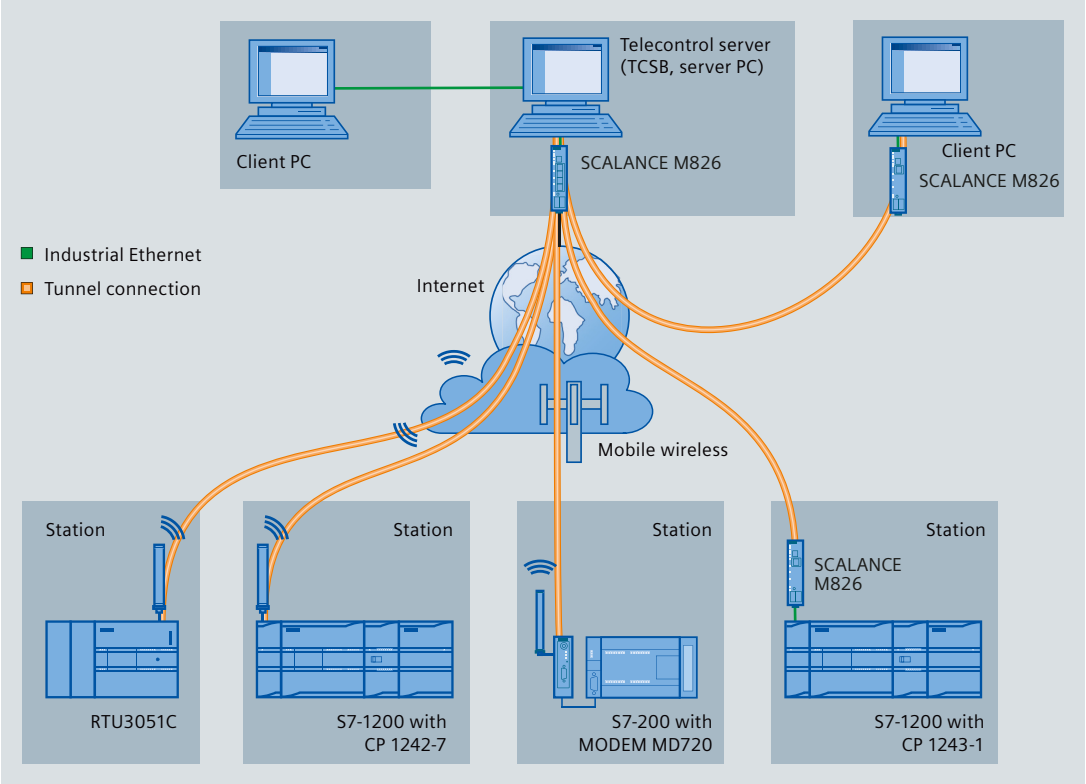

Figure 2-2 Communication of the RTU and other station types with a master station

Telecontrol with the "ST7" protocol

In the following example the RTU communicates using the telecontrol protocol SINAUT ST7. For secure communication, the RTU uses the transport protocol "MSCsec".

The figure contains two alternative connections:

- RTU3010C with connection via the Internet
- RTU3030C with connection via mobile wireless
  It would also be possible to connect via LAN, only via the Internet or via an additional underlying OpenVPN tunnel.

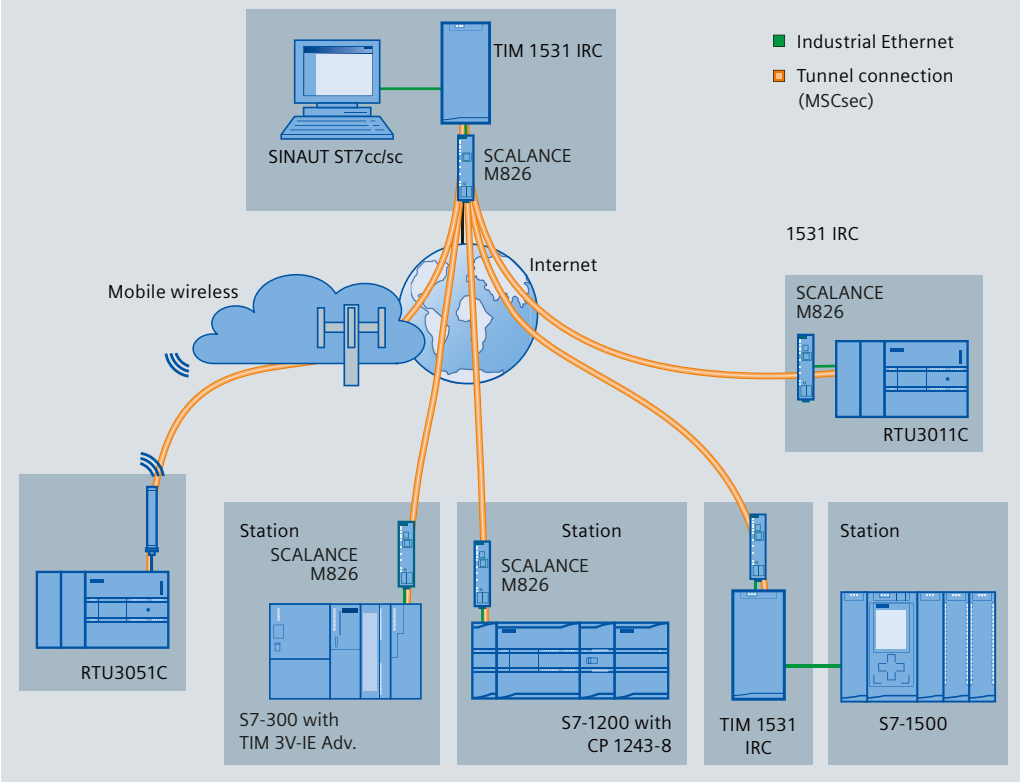

Figure 2-3 Communication of the RTU3011C and RTU3051C with a master station TIM

Telecontrol with the "DNP3" protocol

The following example contains a configuration with stations that communicate with the master via the mobile wireless network and the Internet.

In this example, the master is duplicated. The two devices of the DNP3 master (main and substitute master) in the master station are addressed by the RTU using one DNP3 address but two different IP addresses.

The connections between stations and master are via an OpenVPN server "SINEMA Remote Connect".

When using the DNP3 protocol, for example, SIMATIC PCS 7 TeleControl or the system of a third-party provider can be used as the master. If you use SIMATIC PCS 7 TeleControl as the DNP3 master, you require the necessary DNP3 driver.

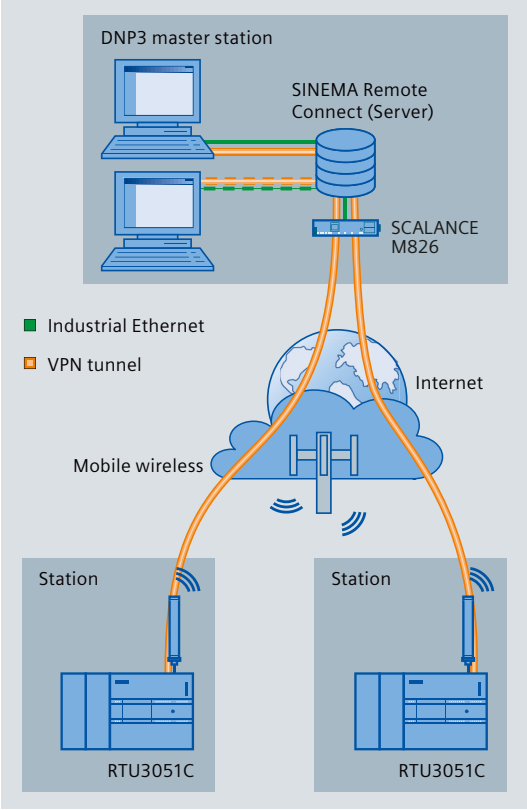

Figure 2-4 Communication of the RTU with a DNP3 master station

Telecontrol with the IEC protocol

The following example contains a configuration with stations that communicate with the master via the mobile wireless network and the Internet.

The connections between stations and master are via an OpenVPN server "SINEMA Remote Connect".

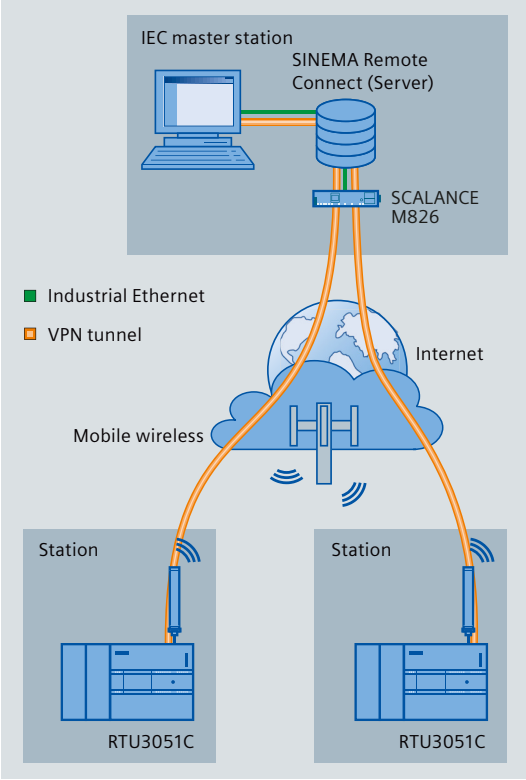

Figure 2-5 Communication of the RTU with an IEC master station

When using the IEC protocol, the RTU can also communicate with a redundantly configured master.

Telecontrol with the "MQTT" protocol

The following example contains a configuration with stations that communicate with a cloud application via the mobile wireless network.

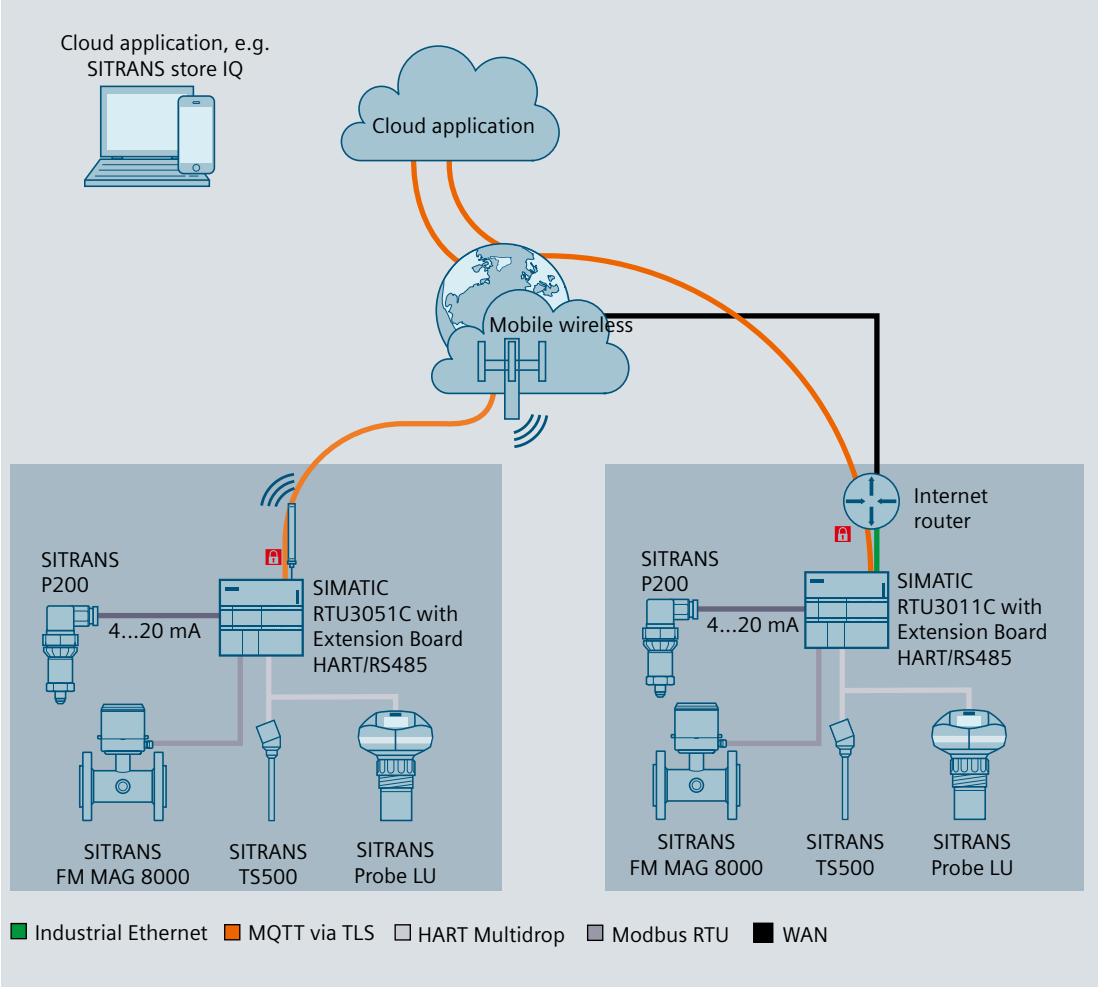

Figure 2-6 Communication of the RTU with a cloud application

The RTU3000C can connect to all common cloud systems such as Insights Hub, Microsoft Azure or AWS via the "MQTT" protocol. In addition to the monitoring of process data of the RTU, all advantages of cloud systems can also be used: (Big) data analysis for improvement of process quality, detection of malfunctions or preventive maintenance in combination with data from other data sources.

Overview of functions

3

3.1 Modes and operating modes

Modes

The modes of the RTU are not configured explicitly but result from the configuration of the communication partner and the existence of an SD card.

The RTU can be operated one or both of the following modes:

TeleControl or cloud

In the "TeleControl" or "Cloud" mode, the RTU can send process data via the mobile wireless network or via the LAN interface and an external router to a master station or the cloud (see also "Communication mode" below).

This mode is adopted when a communication partner (master station or an MQTT broker) is configured.

As an option, process data can be stored on an SD card. To do this logging must be enabled in the WBM in "Operating mode".

Logging

In the "Logging" mode, the RTU has no communication partner in the master station or cloud. Instead, the RTU stores the process data.

This operating mode is adopted when logging must be enabled in the WBM in "Operating mode".

In the "Logging" mode, the RTU requires an SD card where it can store the process data.

The stored process data can be read out from the SD card or sent via the mobile wireless network or the LAN interface and an external router. Cyclic sending is possible by e-mail or FTP. You can load the data on a PC via the WBM.

Operating modes

The RTU can adopt the following operating modes:

- Sleep mode
- Update mode
- Communication mode
- Service mode

Sleep mode

In the energy-saving standard operating mode the updating of the inputs and outputs, the communication functions, the LEDs and the self check function (see section Other services and properties (Page 45)) of the RTU are turned off.

The RTU interrupts the sleep mode in the following situations:

- Pressing the button "WKUP" and changing to the service mode
- Configured change to the update mode (WBM > "Operating mode")
  With the inputs, other specific update cycles can be configured (WBM > "Tags").
- Configured change to the communication mode (WBM > "Operating mode")
- Pending diagnostics message with configured change to the communication mode (WBM > "Diagnostics" > "Notifications")
- Cyclic interruption of the sleep mode to fetch a wake-up SMS (WBM > "Operating mode")
- Occurrence of certain events:
  - Creating a new log file with a configured change to the communication mode to transfer the old log file
  - Further events, refer to the section "Update mode".

In the "TeleControl" / "Cloud" mode, the RTU in sleep mode has the greatest energy-saving potential when using the "TeleControl Basic" protocol.

Update mode

The update mode is controlled by the configurable basic cycle and additional cycle, see section Operating modes (Page 192).

In the Update mode of the basic cycle, the RTU runs through the following steps:

- Read the inputs with the configured lead times and, if enabled, the GPS position (RTU30x1C) that were configured for the current cycle.

Only for value change:

- Processing of the program blocks
- Writing the outputs
- Saving the process data in the send buffer when telecontrol communication is enabled
- Saving the process data on the SD card with Logging enabled

In the Update mode of the additional cycle, the RTU runs through the following steps:

- Reading the analog inputs and/or the expansion card with the configured lead times activated for the current cycle.
- Processing of the program blocks
- Writing the outputs
- Saving the process data in the send buffer when telecontrol communication is enabled
- Saving the process data on the SD card with Logging enabled

Note

If basic cycle and additional cycle coincide (including lead times), only one of the cycles per tag is executed.

After updating, the RTU returns to sleep mode, or changes to the communication mode if this is configured. The update cycle and communication cycle can also run independently of each other.

In addition to the configured update cycle, the RTU changes from the sleep mode to the update mode when configurable events occur. The following events can be configured:

- Value change at the analog input "AI0"
- Edge change at a digital input
- Triggering of timers of program blocks, for example with a pulse generator or with the on/off delay.
- Manual value change of a tag in WBM

If the RTU goes to update mode due to one of these events, no analog inputs are read like with the configured basic cycle.

Note that configured events lead to higher current consumption.

Communication mode

In the Communication mode, the RTU performs the following tasks:

- Activating the internal mobile wireless modem or the LAN interface and an external router (via configurable control outputs of the RTU)
- Sending the data frames to the configured communication partner in the master station or cloud
- Sending stored messages / data (SMS messages, e-mails, FTP file transfer, Syslog)
- Synchronization of the time of day if configured.
- Diagnostics
  In addition to the tasks listed above, in the communication mode a connection can be established to the WBM of the RTU by the telecontrol server or the configuration PC. This makes diagnostics of the RTU and maintenance work possible.

The times of the changeover to the communication mode can be configured as a cycle and upon the occurrence of events, or by the "Operating mode" block with the configured "Start communication mode" function. After transferring data, the RTU returns to the sleep mode. As long as there is no update cycle running.

Connection establishment as a result of receiving a wake-up SMS message from the telecontrol server or from a mobile phone can be configured. Remember that this increases the current consumption of the RTU. For more detailed information, refer to the section Wake-up call / wake-up SMS (Page 42).

Service mode

Service mode can be enabled as follows:

- Briefly press (< 1 s) of the "WKUP" button
- "Operating mode" block with the configured "Start service mode" function

The changeover to the Service mode as the following effect:

- Turning on the LEDs that were turned off in the other operating modes to reduce energy consumption.
- Activation of the LAN interface
  With the LAN interface of the RTU activated, a configuration PC can access the Web pages (WBM) of the RTU.

The Service mode is intended for commissioning and for service purposes on site, for example, to replace the battery.

The service mode can be active parallel with the update mode and communication mode.

The service mode can also be activated permanently. Remember that this increases the energy consumption of the RTU significantly.

3.2 Wake-up call / wake-up SMS

Waking the RTU from sleep mode

The RTU can be woken out of sleep mode with a wake-up call (RTU303xC) or a wake-up SMS from a cell phone.

When using the communications protocol "TeleControl Basic", the RTU can also be woken by a wake-up SMS message that can be generated by TCSB. For other communications protocols the SINEMA Remote Connect server can also send a wake-up SMS message.

Requirements

The most important requirements for the wake up are:

- **Authorization of the phone number**
  The phone number of the cell phone that calls or sends a wake-up SMS to the RTU must be configured, see section User (Page 186).
  The authorized numbers are configured in the WBM of the RTU for the individual users in the group. "Users / groups".
- **Readiness of the RTU to receive**
  To receive a wake-up SMS message promptly, you need to configure the operating modes of the RTU so that the RTU regularly books into the mobile wireless network to check whether SMS messages have been sent, see section Operating modes (Page 192).
  Receiving a wake-up call in sleep mode is only possible if the parameter "Turn on mobile wireless interface regularly and check for receipt of wake-up SMS message?" in the "Sleep mode" parameter group has the setting "Check permanently".

Note

Check SMS service in mobile wireless network

Check with your network provider to find out whether the SMS function is supported in your mobile wireless network. In NB-IoT or LTE-M networks, in particular, the SMS function is not always supported by the network provider.

Wake up

When woken the RTU changes to the communication mode and handles all associated tasks, for example including sending messages.

The RTU establishes a connection to the communications partner.

Texts for wake-up SMS messages

For wake-up SMS messages, you need to use the following text in the message:

- `TELESERVICE`

Texts for wake-up SMS messages with deadline specified

You can also add a specified deadline to a wake-up SMS message. At exactly the time you send with the SMS message, the RTU establishes a connection to its communications partner.

This time is shown in the WBM as the second (assigned) value of the display "Next communication mode (configured / assigned)".

Texts for messages with specified deadline:

- Texts with deadline specified
  - `TELESERVICE YYYY-MM-DD hh:mm:ss`
    or without specifying the seconds:
  - `TELESERVICE YYYY-MM-DD hh:mm`
    If the seconds are not specified, the RTU uses "00" for the seconds.

  If the time is specified without a time zone (time offset) the RTU uses its local time.
- Text with specified deadline when there is a time offset between the sender of the SMS message and the RTU
  If the cell phone and the RTU are in different time zones, you need to add the time zone of your cell phone according to UTC notation. The specification of the time zone of the cell phone must include "+" or "-" and the two digit hours and minutes part.
  Permitted values for the UTC offset are "-12:00" to "+14:00" in minutes resolution.
  The RTU connects at the time specified in the SMS message plus/minus the time offset.
  Examples:
  - `TELESERVICE YYYY-MM-DD hh:mm:00+02:00`
    The cell phone is located in central Europe (+ 1 h) in daylight saving time (+ 1 h). The time offset adds up to + 2 hours.
  - `TELESERVICE YYYY-MM-DD hh:mm:00-08:00`
    The cell phone is located in Canada (- 8 h) without a switchover to daylight saving time.

3.3 Process connection - inputs / outputs

Inputs, outputs

The RTU provides the following inputs and outputs for the process connection:

- 8 digital inputs
  The first two digital inputs can also be configured as fast counter inputs up to 5 kHz.
- 4 digital outputs, designed as bistable mechanical relays
- RTU30x1C: 4 digital outputs, designed as fast electronic relays

- 4 analog inputs
  The input AI0 can also be monitored in sleep mode.
- Up to 32 digital, analog or string inputs and outputs via the expansion card

You will find details in the section Interfaces and connectors (Page 69).

3.4 Control functions

Control functions

The control functions of the RTU are implemented by creating a user program made up of program blocks. The blocks are displayed graphically and programmed on integrated Web pages (WBM), see section Program (Page 242).

The linking with inputs and outputs and the programming of function values is performed conveniently with drop-down lists or by entering values.

The following groups of program blocks are available:

- Logical functions
  Logical AND / OR, NOT (inverter), exclusive OR
- Timer functions
  Delay blocks, pulse generator, timer block
- Analog value functions
  Threshold value and comparator blocks, arithmetic functions etc.
- Counter and summation blocks
  Counter, flow, summation and volume blocks
- Blocks for messages
  Sending by SMS, e-mail and FTP
- Relay blocks
  Latching relays, current impulse relays, wiping relays, time relays
- Other blocks
  Blocks for changing the operating state and the operating mode
  Formula

For a description of the program blocks, refer to the section Program blocks (Page 285).

3.5 Other services and properties

Other services and properties

- **Installation**
  The RTU is mounted on a standard DIN 35 mm rail.
  For installation outdoors, and optional protective housing is available, refer to the section Scope of delivery, accessories, requirements (Page 51).
- **Data point configuration**
  The process data is configured via inputs and outputs and stored in the operand areas input, output and bit memory. The individual operands are mapped and addressed as data points for the communication. The individual data points are processed one-to-one in the control system.
- **Management of users and user groups**
  To control access to the WBM, the RTU has a user management. The users authorized for WBM access are configured in the WBM.
  By setting up different recipient groups for certain types of SMS message and e-mails sent by the RTU, the messages can be assigned to different groups, for example operation, service etc.
- **IP configuration**
  The essential features of IP configuration are as follows:
  - VLAN interface and the WAN interface of the RTU support IP addresses according to IPv4.
  - Address assignment of the LAN interface
    The IP address and the subnet mask can be set manually in the configuration.
    The IP address can also be assigned automatically by the DHCP client function of the RTU.
    If the DHCP server function of the RTU is enabled, for the configuration PC to be connected the IP address is assigned by the RTU in the network (normally the next free address).
  - Address assignment for the default router and DNS servers
    The addresses can be assigned manually or automatically with the DHCP client function of the RTU. The RTU tells the DHCP server its own station name so that it can register the name with its DNS server, if supported.

- **Time-of-day synchronization**
  The RTU has the following options for time-of-day synchronization:
  - NTP
    Time synchronization is carried out via SNTP (Simple Network Time Protocol).
  - By mobile wireless network
    Possible if the network provider supports the NITZ mechanism (Network Identity and Time Zone).
  - By telecontrol master station (only with the protocols TeleControl Basic, ST7, DNP3 and IEC)
    If the RTU has a communication partner in the master station, it should always obtain its local time of day from the partner.
    In most cases, the time of day is transferred as UTC time.
    When using the ST7 protocol the time of day is transferred as the local time of the control center.
    PCS 7 as master transfers the time of day with the DNP3 protocol as UTC and with the IEC protocol as the local time of the PCS 7 PC.
  - GPS
    With the RTU30x1C , time-of-day synchronization can take place via GPS .
    For HW2 to HW4:
    The time of day is only synchronized in cyclic/permanent communication mode.
    For HW5:
    The time is synchronized in cyclic/permanent communication mode in the communication cycle. Without cyclic or permanent communication mode, the time is set with each GPS-relevant scan cycle. If the time is not set, e.g. after a module is restarted, the time is synchronized in the first GPS scan mode, independent of the communication cycle.

  For more information, refer to the section System time (Page 137).
  For information on the format of the time stamp, refer to the section Overview (Page 205).
- **Remote access of connected HART and Modbus field devices**
  The RTU makes the function of a Modbus and HART gateway available internally. This makes it possible for a master (e.g. SIMATIC PDM) to access the field devices connected to the RTU. Field devices can thus be configured and diagnosed remotely via VPN.
  You can find an application example relating to this on the Internet pages of Siemens Industry Online Support under the entry ID 109767945:
  Link: (https://support.industry.siemens.com/cs/ww/en/view/109767945)

3.6 Performance data

Program blocks of the controller

The following number of program block types are available for control tasks:

RTU3030C: 45

RTU30x1C: 46

In total, a maximum of 48 program blocks can be created in up to 8 networks. A maximum of 8 program blocks can be created per network.

For a description of the blocks, refer to the section Control functions (Page 44).

Configuration limits for program blocks

The number of configurable program blocks is limited for some types of blocks:

Program block	Max. number per block type
Total available	48
Pulse sequence	2
Year timer	8
Astronomical clock	4
Analog value processing	4
Statistics	8

Blocks with time functions use internal timer objects, which are also limited:

Program block	Number of timers used internally by a block instance
Total available	50
On delay	1
Off delay	1
On/off delay	2
Retentive on delay	1
Pulse generator	2
Pulse sequence	1
Random on/off delay	2
Year timer	2
Week timer	2
Astronomical clock	2
Wiping relay	2
Time relay	3

All "Script" blocks used, including possible script blocks in the library, have a total memory space of 4096 bytes available.

Program block	Max. number of available characters
Script	4096

Number of communication connections for productive data transfer

- Configurable connections
  The following number of connections can be configured as an alternative:
  - 1 connection to the telecontrol server
  - 2 connections to an ST7 master station (or node station)
  - 1 connection to the MQTT broker
  - 2 connections to a DNP3 master
    As an option, you can configure the connection to a second alternative master. The second connection is kept as redundant connection to a second master of a redundancy group.
  - 2 connections to an IEC master
    The second connection is kept as redundant connection to a second master of a redundancy group.

  Also:
  - Max. 2 connections to OpenVPN servers or SINEMA RC servers
    If OpenVPN is used, a replacement server can optionally be configured.
  - Max. 1 connection to an FTP/FTPS server
  - Max. 1 connection to a mail server (extended SMTP)
- Productive connections
  In total the following connections can be established at the same time:
  - Max. 1 connection to a telecontrol server, an ST7 TIM, a DNP3 or IEC master or an MQTT broker
  - Max. 1 redundancy connection to a DNP3 or IEC master, an ST7-TIM
  - Max. 2 connections to VPN servers
  - Max. 1 connection to an FTP/FTPS server
  - Max. 1 connection to a mail server (extended SMTP)

Number of connections to a SIEM system or syslog server

- Max. 1 connection to a SIEM system or syslog server

Number of HTTP/HTTPS connections for access to the WBM

- Max. 2 HTTP connections at the same time
  A configuration and firmware file cannot be loaded simultaneously via both WBM sessions.
- Max. 2 HTTPS connections at the same time via LAN
- Max. 1 HTTPS connection at the same time via WAN

Number of connections to the WAN interface

A maximum of 6 connections can be established simultaneously at the WAN interface. Possible connections at the WAN interface:

- 1 connection to a telecontrol server, an ST7 TIM, a DNP3 or IEC master or an MQTT broker (static)
- 1 redundancy connection to a DNP3 or IEC master or an ST7-TIM (static)
- 2 connections to VPN servers (static)
- 2 connections to the SINEMA RC configuration server (dynamic)
- 2 connections to an FTP/FTPS server (1 control connection + 1 data connection, both dynamic)
- 1 connection to a mail server (dynamic)
- 1 connection to an NTP server (dynamic)
- 1 connection to a DynDNS server (dynamic)
- 1 connection to a DNS server for name resolution when using DNS names on the WAN interface (dynamic)
- 1 connection to a syslog server (dynamic)

User data and time stamps of data

The individual process values of the inputs/outputs are transferred to the master station or the cloud in data frames with a time stamp. You will find details in the section System time (Page 137).

Frame memory (send buffer)

The RTU has a send buffer for the values of data points configured as an event.

The RAM area for the send memory has a size of 256 KB. Due to the different frame sizes with the various communication protocols, the maximum capacity of the send buffer differs for the protocols.

Maximum quantity in the send buffer:

- TeleControl Basic, depending on the DP type:

DP type	Max. number of events
1 bit	17000
32 Bit Unsigned Integer/32 Bit Float	13000
Array of Char with 20 characters	7000

- ST7: Max. 7694 frames or 3839 frames per ST7-TIM with use of the redundancy connection
- DNP3: Max. 10910 events
- IEC: Max. 5456 events
- MQTT: Max. 10000 topics with one data point each

Memory space for process data in the "Logging" operating mode

Memory space for process data in the "Logging" operating mode is only limited by the size of the plugged in SD card.

Due to the restriction of the FAT32 file system, a single log file can have a maximum size of 4 GB.

Texts for messages (SMS / emails)

Up to 20 texts can be configured in the WBM for sending by e-mail or SMS.

Each text can contain up to 8 placeholders for process data.

Buffer for messages and files

The RTU stores up to 12 e-mails, up to 12 FTP transfer files and up to 12 SMS messages that should not or cannot be sent immediately.

An FTP transfer of the diagnostic buffer or the current log file is only entered in the buffer if it differs from an FTP transfer already in the buffer in one of the following values:

- File name
- Server path
- Alarm marking
- Different usage of delta functionality in log files

If you have selected the current process image as file for the FTP transfer, the transfer is entered in the buffer whenever there is space.

The RTU can change to the communication cycle when a configurable number of stored messages is reached, refer to the WBM pages "WAN" > "SMS" or "Services > E-mail / FTP".

3.7 Scope of delivery, accessories, requirements

Unpacking and checking

WARNING

Do not use any parts that show evidence of damage

If you use damaged parts, there is no guarantee that the device will function according to the specifications.

If you use damaged parts, this can lead to the following problems:

- Injury to persons
- Loss of approvals
- Violation of the EMC regulations
- Damage to the device and other components

Use only undamaged parts.

1. Make sure that the package is complete.
2. Check all the parts for transport damage.
3. For RTU3051C: Before installation and commissioning, check that the anti-tamper seal on the device is undamaged.

Components supplied with the RTU

The following positions ship with the RTU:

- RTU3030C, RTU3031C, RTU3041C or RTU3051C
- Terminal blocks for the electrical connections of the RTU (plugged in)
- Slide for SIM card (inserted in the compartment of the SIM card)
- Instruction sheet with important information

Required accessories and requirements

Apart from the RTU the following accessories are necessary and do not ship with the product:

- **Power supply**
  You require a power supply for the RTU, optionally:
  - External power supply (provided on-site)
    and /or
  - Battery modules (see section "Optional accessories")
- **LAN cable**
  For the connection of the configuration PC or an external router to the LAN interface of the RTU, you require an ITP cable Cat 5.

Requirements for the configuration PC

- **Web browser**
  To configure the RTU you require access to the integrated Web pages (WBM) of the RTU. For this, you need a configuration PC with one of the following web browsers:
  - Apple Safari
  - Google Chrome
  - Microsoft Edge
  - Firefox Quantum

  Recommendation: Use the latest available version of the web browser, if possible.
  The following functions must be enabled in the web browser:
  - Accepting cookies
  - JavaScript
  - Pop-ups

  Note
  Number of connections with HTTPS

  Even when using HTTPS, Mozilla Firefox and Apple Safari establish only one connection to the partner.

- **OpenVPN server for access to the WBM of the RTU via the mobile wireless network**
  You will find the requirements and a description of the procedure in the section Establishing a connection to the WBM of the RTU (Page 123).

Optional accessories

Apart from the RTU the following accessories may be necessary and do not ship with the RTU:

- **Battery module**
  If no power supply is available locally in the area of the station (RTU), you require one or two battery modules with suitable batteries.
  In pure battery operation the use of two battery modules is strongly recommended since only then is interrupt-free operation and full use of the battery capacity possible.
  The battery modules are available as accessories, refer to the appendix Battery module (Page 403).
- **Battery expansion modules**
  To increase the capacity of the battery modules, you can add one or two battery expansion modules to the standard battery module. The battery expansion modules are available as accessories, see appendix Battery module and battery expansion module (Page 403).
- **Expansion card**
  To connect up to 16 additional devices (slaves) via Modbus RTU or HART, you can add an expansion card to the station (RTU). The expansion card is available as accessory, see appendix EXTENSION BOARD HART / RS485 (Page 409).

- **Protective housing**
  With higher requirements for the protection of the RTU, you require a suitable protective housing.
  Two suitable protective housings are available in the accessories program of the RTU, see appendix Aluminum protective housing (Page 420).
- **SD card**
  For the "Logging" mode, you require an SD card with min. 4 GB.
  If you need to replace the RTU, you can also use the SD card to transfer the configuration data stored on the RTU being replaced to the new device. Every change to the configuration data is saved on a plugged in SD card.
  You can also use the SD card to copy the configuration data of an RTU to other RTUs. This is particularly useful in large projects with many stations because only the station-specific data needs to be adapted for each RTU.
  You will find information on using the SD card in the section Slots for SIM card and SD card (Page 76).

Note

Operation with SD card

It is strongly recommended that you only operate the RTU with an SD card, in particular because an SD card is required in the following situations:

- Logging if an error occurs
- Upgrading the firmware version

Master station / communication partners

To use the ST7, DNP3, IEC or MQTT protocols, you need the relevant firmware variant for the RTU, see section Communications services (Page 55).

When using the "TeleControl Basic" protocol

- Master station PC with accessories
- Router, e.g. SCALANCE M826
- TCSB software:
  – TeleControl Server Basic V3.0 + SP2 (or higher)

  You will find information on this in the manual, see /4/ (Page 440).

When using the "SINAUT ST7" protocol

- TIM module as communication partner
- STEP 7 for configuring communication partners

When using the DNP3 or IEC protocol

- Master station
  - PC with accessories
  - The relevant master application
  - Security module SCALANCE S
- OpenVPN server
  To use the DNP3 and IEC protocols, you should use the OpenVPN protocol. You require:
  - An OpenVPN server or SINEMA RC, see section Security functions for communication (Page 29).
  - The CA certificate of the server
  - The configuration of the client on the OpenVPN server

  Importing the files for authentication of the RTU is described in the section VPN 1 / VPN 2 (Page 177).

When using the MQTT protocol

For cloud access, you need the access set up to a cloud broker.

Accessories for mobile wireless communication

The following accessories are necessary if the RTU communicates with a master station or the cloud using mobile wireless, if data of the station is to be sent by SMS or e-mail or if the RTU is to synchronize its time of day via the mobile wireless network (also via NTP).

- **Antenna**
  Only use antennas from the range of accessories for the RTU; refer to the section Antennas and accessories (Page 414).
- **Cabinet feedthrough for the antenna and flexible connecting cable for the protective housing**
  See appendix Antenna accessories, screw connections (Page 417).

- **Mobile wireless contract / SIM card**
  If the RTU is to communicate with a partner in the master station or cloud using the mobile wireless network, you require a suitable mobile wireless contract with associated SIM card. Depending on the contract, the RTU receives a dynamic or fixed IP address assigned by the mobile wireless network provider.
  If you want to access the RTU directly with HTTPS, the RTU needs a public IP address.
  If the RTU is to transfer not only SMS messages but also process data via IP-based services, such as TCP or UDP, the wireless contract must support the sending of data.
  If you want to operate the protocols DNP3 and IEC directly on the WAN interface without underlying VPN tunnels, you need a private APN to prevent third-party access.
- **Communication partner**
  Depending on the protocol you are using, you require a suitable communication partner for the RTU:
  - Telecontrol server (TCSB)
  - ST7-TIM
  - DNP3 master
  - IEC master
  - MQTT broker

  The communication partner must be reachable from the LAN or Internet via a router, for example SIMATIC NET SCALANCE M826.
  With the DNP3 and IEC protocols make sure you have suitable security mechanisms for the connection.

Accessories for GPS determination

The following accessories are required if the position is to be determined via GPS and if the RTU is to synchronize its time via GPS.

- **Antenna**
  Only use antennas from the range of accessories for the RTU; refer to the section Antennas and accessories (Page 414).
- **Cabinet feedthrough for the antenna and flexible connecting cable for the protective housing**
  See appendix Antenna accessories, screw connections (Page 417).

3.8 Communications services

Interfaces for communication

The RTU supports communication via mobile wireless (WAN interface) and via LAN, optionally with an external router. For the following communication services the interface (LAN/WAN) can be set separately: Telecontrol, e-mail, FTP, NTP and syslog.

As of firmware version V3, connections to an OpenVPN server (or SINEMA RC) can be made via LAN or WAN.

Exception: Connections for DynDNS are always via mobile wireless.

You will find a selection of routers in the appendix IP-based routers (Page 419).

Protocols for communication with a master station or cloud

Depending on the loaded firmware variant, the RTU supports one of the following protocols for communication with a master station or cloud:

- **TeleControl Basic**
  This is a proprietary protocol of Siemens for telecontrol applications.
  The IP-based communication protocol is used to connect the RTU to the application TCSB. TCSB is installed on a PC in the master station, the telecontrol server. For the version, see section Scope of delivery, accessories, requirements (Page 51).
  Via the OPC-DA or OPC-UA server of TCSB, and OPC client can access the process data of the RTU. For the TCSB manual, see /4/ (Page 440).
  Apart from the RTU, several S7-1200 CPs also support the protocol. It allows especially energy-saving operation since communication connections are only established temporarily.
- **SINAUT ST7**
  The RTU uses the ST7 protocol for communication with a master station TIM.
  For communication with a PC application in the master station, the connection must run via the master station TIM.
  When communicating with a TIM module, the RTU uses the transfer protocol "MSCsec" on the network layer (OSI layer 3). The ST7 or MSC protocol cannot be used for communication with a master station application.

- **DNP3**
  The RTU functions as a DNP3 station (Outstation).
  Communication is based on the DNP3 SPECIFICATION Version 2.x (2007/2009).
  The RTU is certified for the DNP3 conformity levels Level 1 and 2, but also supports higher conformity levels.
  For secure communication with the master, the connection can be established via a VPN tunnel, see section Security functions for communication (Page 29).

NOTICE
Securing communication • When using the LAN interface, select suitable means to make sure that there is secure communication with the master, for example by using SCALANCE M routers. • For direct use of the WAN interface without an underlying VPN connection, make sure that the mobile wireless network is protected against access by third parties, e.g. by using a private APN.

According to the specification "Supplement to Volume 2 - SECURE AUTHENTICATION", the RTU supports secure authentication, see section DNP3 (Page 249).
You will find a detailed overview of the attributes and properties specified in the DNP3 protocol and supported by the RTU in the DNP3 device profile, see /2/ (Page 439).
You can find the supported object groups and variations in the section Data points (Page 261).
Communication partners (DNP3 masters) of the RTU can be:

- SIMATIC PCS 7 TeleControl
- SIMATIC WinCC TeleControl
- A TIM module with DNP3 capability (TIM 3V IE DNP3 / TIM 4R IE DNP3)
  For the manual of the TIM module see /8/ (Page 441).
- Third-party systems that support the DNP3 specification named above.

- **IEC 60870-5**
  The RTU functions as a substation (slave).
  Communication is based on the specification IEC 60870-5 Part 104 (2006).
  Communication partners of the RTU can be all master systems that support the specification named above.
  For secure communication with the master, the connection can be established via a VPN tunnel, see section Security functions for communication (Page 29).

NOTICE
Securing communication • When using the LAN interface, select suitable means to make sure that there is secure communication with the master, for example by using SCALANCE M routers. • For direct use of the WAN interface without an underlying VPN connection, make sure that the mobile wireless network is protected against access by third parties, e.g. by using a private APN.

  You will find a detailed overview of the attributes and properties specified in the IEC specification and supported by the RTU in the IEC device profile, see /3/ (Page 440).
  You can find the supported IEC type identifiers in the section Data points (Page 261).

- **MQTT**

  Note

  Communication via broadband networks with text-based payload formats

  If you are using text-based payload formats, such as JSON or XML (see section Topics (only MQTT) (Page 272)), via the wireless network interface, communication over broadband networks, such as UMTS or LTE-M, is highly recommended. You will achieve the best performance when using TLS directly via the WAN interface.

  The RTU serves as a client and supports the connection to cloud systems that support a broker functionality with MQTT according to OASIS standard version 3.1.1.
  Communication can take place encrypted via TLS v1.2. To this end, authentication of the server and client is supported by certificates. For login to the broker, a user and password can be created.

When it ships, the RTU is loaded with the firmware variant for the "TeleControl Basic" protocol.

Supported cloud systems

Communication is adapted to the following cloud systems and supports the listed services and functions:

- Insights Hub
  Service: Native MQTT Agent
  Function: Publisher
- AWS (Amazon)
  Service: IoT Core
  Function: Publisher and Subscriber

- Azure (Microsoft)
  Service: IoT Hub
  Function: Publisher and Subscriber
- IBM Cloud (IBM)
  Service: Watson IoT Platform
  Function: Publisher and Subscriber

Firmware for the protocols MQTT, DNP3, IEC and ST7

To use these protocols, you need to load the corresponding firmware variant on the RTU.

You can obtain the suitable firmware file free of charge from Siemens Industry Online Support:

- Link: (https://www.automation.siemens.com/aspa_app/)
  Here, you will find a contact.
- Link: (https://support.industry.siemens.com/cs/ww/en/ps/21766/dl)
  With this page, you can download the firmware.

The firmware version for the "TeleControl Basic" protocol loaded when the device was delivered is overwritten in this case, but it can be loaded to the module again at any time.

For information on loading firmware files, see section Loading firmware (Page 378).

Other communication services

The RTU can send messages and data for configured event classes (diagnostics buffer entries) either as SMS messages or as e-mails.

- **SMS (receive)**
  The following SMS messages can be received:
  - Wake-up SMS message configured in the Configuration and Monitoring Tool (CMT) of TCSB for establishing a connection to the telecontrol server
  - Manually triggered wake-up SMS message from the Web server of TCSB for establishing a connection to a PC (via the telecontrol server)
  - Wake-up SMS from SINEMA Remote Connect
  - Manual TeleService SMS optionally with deadline
  - SMS message as request for a diagnostics SMS message
  - SMS as request for the last GPS position (only RTU30x1)

  You enable receipt of SMS messages in the WBM, refer to the section SMS (Page 168).
- **SMS (sending)**
  The following SMS messages can be sent:
  - SMS message if diagnostics messages occur, refer to the section Configuration (Page 143).
  - SMS message with event-related process data via program blocks, refer to the section Sending SMS messages (Page 347).
  - Diagnostics SMS message, refer to the section Diagnostics options (Page 373).
  - SMS messages if certain events occur relating to the SD card or battery module
  - SMS when the IP address changes on the WAN interface

- **E-mail (sending)**
  The following e-mails can be sent:
  - E-mail if diagnostics messages occur, refer to the section Configuration (Page 143).
  - E-mail with event-related process data via program blocks, refer to the section Send e-mail (Page 348).
  - E-mails with process data (log file) using the logging function, refer to the section Logging (Page 194).
  - E-mails if certain events occur relating to the SD card or battery module
  - E-mail when the IP address changes on the WAN interface

  In the attachment of an e-mail, there is the option of transferring the current process image, the log file or the entire diagnostics buffer. The attachment is transferred uncompressed or compressed as a ZIP archive.
  You configure the access data and general settings for using the e-mail service in the WBM, refer to the section E-mail (Page 171).
  For information on the configurable security option "STARTTLS" when sending e-mails, refer to the section Security functions for communication (Page 29).
  You configure further parameters of messages on the following WBM pages:
  - Recipient of the messages, refer to the section Users / groups (Page 186).
  - Message texts, refer to the section Texts (Page 223).
  - For information on selecting the attachment of the e-mail, see section Configuration (Page 143).
- **FTP (sending)**
  Transfer of FTP files via a program block to an FTP server reachable via LAN or the Internet
  The function corresponds to the FTP command "PUT".
  An FTP file transfer is possible for the following data:
  - Current log file
    See section Logging (Page 194).
  - The entire process image
  - The entire diagnostics buffer

  The file can be transferred uncompressed or compressed as a ZIP archive. For uncompressed transfer, the file transfer can also be performed with the "Append" function. The following applies:
  - When the file being transferred arrives at the destination location, the FTP server appends the file to an existing file of the same name, if present, instead of overwriting it.
  - In combination with the "Append" function, the "Transfer delta" option can be enabled for transfer of the current log file.
    Only the difference of the log file compared to the last successful transfer is transferred. This reduces the volume of data to be sent.

  For information on the program block see section FTP file transfer (Page 349).
  For information on the configurable security option when using FTP transfer see section Security functions for communication (Page 29).

- **Syslog (send)**
  Transmission of messages from the event buffer of the RTU to a Syslog server or a Security Information and Event Management System (SIEM system):
  The messages are sent in UDP format according to RFC 5424. Details about the structure of the Syslog frames and the supported event buffer entries can be found in the section Structure of the Syslog Messages (Page 427).
- **HTTP / HTTPS**
  The communication partners always connect to the WBM of the RTU. HTTP/HTTPS is used for the following connections of the RTU:
  - Connection of the configuration PC via the LAN interface of the RTU, optionally via an external router.
  - HTTP/HTTPS connection of the configuration PC via mobile wireless (via an OpenVPN tunnel)
  - HTTPS connection of the configuration PC via mobile wireless if the RTU has a publicly reachable IP address.
    You will find information on usage in the section Establishing a connection to the WBM of the RTU (Page 123).
  - Connection of a service PC to the RTU via the Web server of TCSB more
- **OpenVPN**
  OpenVPN should be used to connect the RTU to a DNP3 or IEC partner.
  OpenVPN can also be used for connections of the RTU to the Telecontrol server, an ST7 partner, an MQTT broker, to a configuration PC, time synchronization via SNTP, Syslog communication, e-mail or for the FTP file transfer.
  You will find additional information on using OpenVPN in the section Security functions for communication (Page 29).

LEDs, connectors, buttons, QR code

4

4.1 Appearance of the device

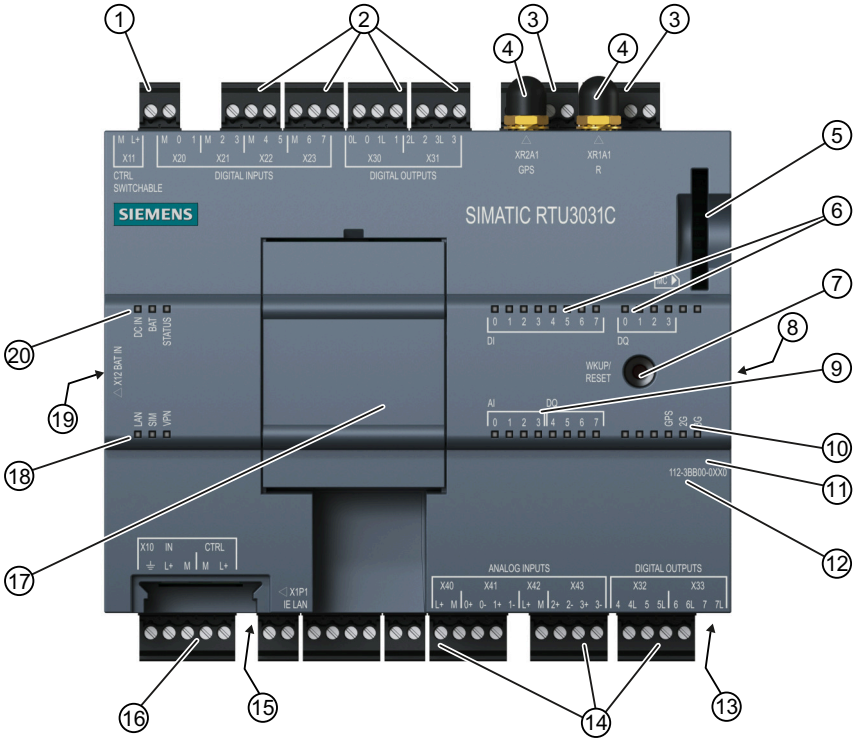

Figure 4-1 Location of the LEDs, connectors, buttons, card slots

Table 4-1 Meaning of the number symbols

①	X11: Control output to supply sensors and actuators	⑪	MAC address
②	X20..X23: Terminals for digital inputs	⑫	Serial number (2D matrix code, alphanumeric)
③	X30..X31: Terminals for digital outputs	⑬	◀SIM: Receptacle for SIM card (underside)
④	XR1A1 R: SMA socket for the antenna XR2A1 GPS: GPS socket for antenna connection (RTU30x1C)	⑭	X40..X43: Terminals for analog inputs X32..X33: Terminals for digital outputs (RTU30x1C)
⑤	MC▶: Receptacle for SD card	⑮	X1P1: Ethernet interface RJ-45 (underside)
⑥	DI / DQ: Status LEDs for digital inputs/outputs	⑯	X10 IN: Input for external power supply X10 CTRL: Control output to supply sensors and actuators
⑦	WKUP/RESET: button	⑰	Slot for extension board
⑧	*Service interface (on the side) - not required*	⑱	Connection status LEDs "LAN", "SIM", "VPN"

⑨	AI: Status LEDs for analog inputs DQ: Status LEDs for digital outputs (RTU30x1C)	⑲	X12 BAT IN: Connector for battery module (on the side)
⑩	Wireless status LEDs	⑳	RTU status LEDs "DC IN", "BAT", "STATUS"

4.2 LEDs

LEDs of the device

To reduce current consumption, the LEDs are turned off during operation of the RTU. The LEDs are only turned on in service mode.

The current statuses of the LEDs are always visible in the WBM of the RTU.

To signal the various statuses of the RTU, its inputs and outputs and the communication properties, the RTU has the following LEDs:

Table 4-2 Overview of the LED groups

Name	Possible colors	Meaning
RTU status		
DC IN	green / yellow	Status of the external power supply
BAT	green / yellow	Use of the battery modules
STATUS	green / red	Display of the mode, operating mode and errors
Connection status		
LAN	green / yellow	Status of the LAN interface
SIM	green / red	Status of the wireless interface and the SIM card
VPN	green	Status of the tunnel connection
Status of the digital inputs (DI) and digital outputs (DQ)		
DI 0 ... 7 DQ 0 ... 3 RTU30x1C: DQ 4 ... 7	green	Status of the digital inputs and outputs
Status of the analog inputs (AI)		
AI 0 ... 3	red	Status of the analog inputs and the connected sensors
Wireless status		

Name	Possible colors	Meaning
RTU303xC: 2G, 3G RTU3041C:2G, 4G RTU3051C: 2G, LPWAN	green / yellow	Status of the data transfer and signal quality of the wireless link
RTU3031C/ RTU3041C: GPS RTU3051C: GNSS		Status of GPS position determination

Information on the tables

LED symbols

The LED symbols in the following tables have the following significance:

Table 4-3 Meaning of the LED symbols

Symbol			
LED status	OFF	ON (steady light)	Flashing

"Meaning" column

If a cell in the "Meaning" column has several entries with bullets, all or only individual meanings may apply.

RTU status LEDs

Table 4-4 RTU status LEDs

Name	Color	Meaning
DC IN		External power OFF
		External voltage ON, voltage value in the range 10.8 ... 28.8 V, but not configured
		External voltage ON, voltage value in the range 10.8 ... 28.8 V
BAT		• No power supply from battery modules • No battery module configured
		Power supply from configured battery module 1 (directly at RTU)
		Power supply from configured battery module 2 (to the left of battery module 1)

Name	Color	Meaning
STATUS	☐	No error and sleep mode or service mode or update mode
		• Start-up after power ON • Configuration data is changed. • Resetting to factory settings initiated
	■	Communication mode
	■	• Fault in the power supply – Battery supply that is not configured. – Battery supply with the configuration of an external power supply – Critical battery capacity – External power supply that is not configured. • Mobile wireless error – Connection error – Error accessing the SIM card – Incorrect PIN • Time-of-day synchronization failed • Error in Logging – SD card does not exist – Access error • Error on the expansion card – Configured expansion card not recognized – Error reading sensor values – Error writing the sensor values For diagnostics, refer to the messages in the diagnostics buffer.
	flashing red	• No configuration • Duplicate IP address • No IP lease received from DHCP server (when the IP address is obtained automatically) • Overload at one of the voltage outputs: X10 CTRL / X11 CTRL / X40 / X42

Connection status LEDs

Table 4-5 Connection status LEDs

Name	Color	Meaning
LAN	☐	• No connection to the LAN • LAN interface disabled
	■	Connection to the LAN
		Data transfer on the LAN

Name	Color	Meaning
SIM	☐	SIM card has not yet been checked
	■	SIM card error
	✳	Wrong PIN configured
	■	PIN was accepted
VPN	☐	No VPN tunnel configured or RTU not in communication mode
	■	All configured VPN tunnels established
	✳	Not all configured VPN tunnels established

Wireless status LEDs

Table 4-6 Wireless status LEDs

Name	Color	Meaning
RTU303xC: 2G, 3G RTU3041C: 2G, 4G RTU3051C: 2G, LPWAN	☐	• No communication mode • No reception or very bad wireless link quality (< -97 dBm) • 2G, 3G or 4G disabled in the configuration
	■	Medium wireless link quality (-95 ... -81 dBm)
	✳	Data transfer with medium wireless link quality (-95 ... -81 dBm)
	■	Good wireless link quality: (> -79 dBm)
	✳	Data transfer with good wireless link quality: (> -79 dBm)
RTU3031 and RTU3041C: GPS RTU3051C: GNSS	☐	• No update mode • No reception • GPS disabled in the configuration
	■	Position determination active
	■	Receiving position

Status LEDs of the inputs (DI, AI) and outputs (DQ)

Table 4-7 IO status LEDs

Name	Color	Meaning
DI	☐	• Last read status of the "OFF" input • DI0 / DI1 configured as counters • Input not configured
	■	Last read status of the "ON" input

Name	Color	Meaning
DQ	☐	• Last read status "OFF" (relay open) • Output not configured
	■	Last read status "ON" (relay closed)
AI	☐	• No error • Input not configured
	■	Errors: • Measured value outside the measuring range (overshoot, undershoot) • Cable break (with 4...20 mA signal) • Overload of the measuring amplifier of the RTU

Status LEDs of the optional expansion card

Table 4-8 Expansion card status LEDs

Name	Color	Meaning
HART	☐	• Expansion card not configured • HART not enabled
	■	HART bus enabled in the configuration
TxD	☐	Outside of the update cycle
	■	RTU sends data to the bus
RxD	☐	• Outside of the update cycle • Connected device does not send data
	■	RTU receives data from the bus
RS485	☐	• Expansion card not configured • Modbus RTU not enabled
	■	RS485 bus enabled in the configuration
TxD	☐	Outside of the update cycle
	■	RTU sends data to the bus
RxD	☐	• Outside of the update cycle • Connected device does not send data
	■	RTU receives data from the bus

LEDs with a firmware update

After activating a new firmware file, the following LEDs are lit briefly when the RTU restarts:

- Red: STATUS
- Green: DC IN, BAT, SIM, VPN

Updating the RTU3030C firmware version 2 to firmware version 3

When updating the RTU3030C firmware version 2.0 to firmware version 3.0, the firmware version for the mobile wireless module is also updated. For more information on this, see section Firmware (Page 149). During the update, the following LEDs light up and the RTU must not be switched off:

- Red: STATUS
- Green: DC IN, BAT, SIM, VPN

Loading the firmware via SD card (firmware version 5 and higher)

If the firmware is loaded and activated via the SD card, the RTU displays the following LED pattern during the update:

- Yellow: DC IN, BAT
- Red: STATUS

4.3 Interfaces and connectors

You will find the location of the individual RTU connectors in the section Appearance of the device (Page 63).

You will find the pinning of the terminal blocks and the connector plans in the section Connecting up the RTU (Page 95).

You will find the electrical data of the connectors in the section Technical specifications (Page 383).

You configure the power supply of the RTU itself and the control outputs of the RTU in the WBM, refer to the section Power supply (Page 197).

Note

Output voltage

The voltage at the terminals X10, X11, X40 and X42 of the RTU and CTRL at the extension board can be set to 12 or 24 V DC in the WBM for all control outputs.

Maximum cable lengths

The maximum length of all cables connected to the RTU or the extension board is 30 m.

Design of the connectors as plug-in terminals

The connectors are designed as plug-in screw terminals located side by side on the top and bottom of the device. By removing the terminals you can wire the individual connectors even when there is little space and then plug them in again even if the device is already in a protective housing.

Reverse polarity protection

All terminals are designed so that they can only be plugged into one position. This provides constructional reverse polarity protection.

The connector X10 IN to the external power supply of the RTU also has electronic reverse polarity protection.

X10: Voltage input of the RTU and control output for actuators and sensors

X10 is a connector with a 5-pin terminal.

- **X10 IN**
  The RTU is supplied with an external voltage via the connector X10 IN. Voltage sources with a voltage range of 12 to 24 VDC are possible.
  If you operate the device in a control cabinet, you can use a power supply that does not comply with NEC Class 2. When connecting up the device, adhere to the safety notices listed below.

WARNING
Safety extra low voltage The device is designed for operation with a directly connectable safety extra-low voltage (SELV) according to UL/IEC 61010-1 and UL/IEC 61010-2-201 whose output power corresponds to "Limited Energy" according to UL/IEC 61010-1.

NOTICE

Suitable fuse for the power supply cables (corresponds to "Limited Energy")

The current on the terminal may not exceed 3 A. Use a fuse for the power supply that is suitable for protection of AC/DC power supply circuits *) and protects against currents > 3 A.

- In areas subject to the NEC or CEC, the fuse must meet the following requirements:
  - Suitable for AC/DC *) (min. 60 V / 3 A)
  - Breaking current at least 10 kA
  - Approval according to ANSI/UL 248-14 (suppl. fuses), ANSI/UL 248-4 (Class CC), ANSI/UL 248-8 (J), ANSI/UL 248-15 (T), or CSA C22.2-4 No. 248.14 (suppl. fuses), No. 248-4 (Class CC), No. 248-8 (J), No. 248-15 (T)
- In other areas, the fuse must meet the following requirements:
  - Suitable for AC/DC *) (min. 60 V / 3 A)
  - Breaking current at least 10 kA
  - Approval according to IEC/EN 60947-1/2/3 or IEC/EN 60898-1/2 for circuit breakers
  - Breaking characteristics: B or C
  - Approval according to IEC/EN 60127-1 for fuses
  - Breaking characteristics: max. 120 s at 2 x I_n (corresponds to melting integral I^2t < 4320)

If the properties of the supplying current source are known, the following fuse is also possible:

- In areas subject to the NEC or CEC, the fuse must meet the following requirements:
  - Suitable for AC/DC *) (min. 60 V / 3 A)
  - Breaking current > highest possible current of the current source (incl. short circuit current and fault)
  - Approval according to UL 1077 or CSA C22.2 No. 235
- In other areas, the fuse must meet the following requirements:
  - Suitable for AC/DC *) (min. 60 V / 3 A)
  - Breaking current > highest possible current of the current source (incl. short circuit current and fault)
  - Approval according to IEC/EN 60934
  - Breaking characteristics: max. 120s at 2 x I_n

*) AC or DC depending on availability

If you use battery modules at the same time as an external voltage source, the RTU switches from battery operation to the external voltage supply as soon as there is an adequate voltage at X10 IN.

- **X10 CTRL**
  X10 CTRL can be configured using the WBM as a 12/24 V control output to control an external router or to supply sensors and switches of actuators connected to the RTU.
  The voltage value for X10 and X11 (12 or 24 V) can be configured.
  X10 CTRL is regulated; in other words the voltage is independent of X10 IN. Voltage fluctuations of the external power supply are not passed on to X10 CTRL.
  X10 is not designed for the power supply of powerful actuators. Remember the maximum permitted power in the section Technical specifications (Page 383).

X11: Output for controlling and supplying sensors and switches

X11 is an output for controlling an external router or for controlling and supplying sensors and switches of actuators connected to the RTU.

X11 can be configured in the WBM as a 12/24 V control output. The voltage value for X10 and X11 (12 or 24 V) can be configured.

X11 is a regulated control output with a two pin terminal. On X11, voltage is only applied during the update cycles and only when this is configured.

X11 is not designed for the power supply of powerful actuators. Remember the maximum permitted power in the section Technical specifications (Page 383).

Configuring the inputs / outputs

The individual connectors X20... / X30... / X40... are activated and configured in the WBM (active / not active):

- X20 .. X23: 8 digital inputs
  The first two inputs (DI0, DI1) can be configured as counter inputs.
- X30 .. X31: 4 digital outputs
- X32 .. X33: 4 digital outputs (RTU30x1C)
- X40 .. X43: 4 analog inputs

The input and output properties such as signal type, measuring range etc. are configured in the WBM.

X20 .. X23: Digital inputs / counter inputs

The eight connectors X20 .. X23 are intended for the two signal wires of the sensors. They can also be used to monitor an external router.

The sensors can be supplied with voltage via the connectors X10 or X11 of the RTU.

The digital inputs are designed as Schmitt trigger inputs with a pull-up resistor. They can be switched via open drain transistors, relays or switches.

When closed, no current is used at the inputs. This means that the current consumption of the RTU does not depend on whether sensors with NO or NC contacts are connected.

The two inputs DI0 and DI1 can be configured alternatively as counter inputs (max. 5 kHz).

X30 .. X31: Digital outputs

The four connectors are intended for the control inputs of actuators or relays. They can also be used to control an external router.

When necessary, actuators can be supplied with voltage via the control outputs X10 or X11 of the RTU.

The digital outputs are designed as bistable relays which maintain their current state even in sleep mode of the RTU without power supply. In the open status, no current flows by the two terminals of the individual outputs.

X32 .. X33: Digital outputs (RTU30x1C)

The four connectors are intended for the control inputs of actuators or relays. They can also be used to control an external router.

When necessary, actuators can be supplied with voltage via the control outputs X10 or X11 of the RTU.

The digital outputs are designed as electronic relays and require power even in sleep mode of the RTU in order to maintain the "closed" state. In the open status, no current flows by the two terminals of the individual outputs. The electronic relays are preferable to the bistable relays on X30 .. X31 for fast and frequent switching cycles.

X40 .. X43: Analog inputs

Up to four analog sensors can be connected.

The RTU supports the following output signals:

- Current / voltage (measuring transducer with auxiliary power)
  - 0/4 ... 20 mA
  - 0 ... 10 V
  - 0 ... 5 V
- Temperature, Pt1000 (sensor in 2-wire technology)
  -80 ... +140 °C / -112 .. +284 °F
  The cable resistances can be specified in the WBM to correct the temperature measured values. As an alternative, the cable resistances can be calculated on the RTU by specifying specific table data.

The signal types of the inputs are configured in the WBM of the RTU.

The inputs X41/0 and X41/1 measure at the same time, the inputs X43/0 and X43/1 following this and one after the other. Refer to the notes in section Analog inputs (Page 212).

The input AI0 can also be monitored for changes in sleep mode.

X1P1: Ethernet interface

X1P1 is the LAN connector of the RTU.

Note

No connection to the Internet

The LAN connector is not suitable for direct connection of the RTU to the Internet. To do this, an external router with suitable security mechanisms must be connected.

XR1A1 R: Antenna connector mobile wireless

An antenna is connected to the SMA socket if communication via the mobile wireless network is intended.

XR2A1 GPS: Antenna port GPS (RTU30x1C) or antenna port GNSS (RTU3051C)

An antenna is connected to the SMA socket if position determination or time synchronization via GPS/GNSS is planned.

X12 BAT IN: Connector for battery module (on the side)

Here, you connect one or two optional battery modules along with up to two battery expansion modules.

4.4 The button "WKUP/RESET"

Functions of the button

The "WKUP/RESET" button has the following functions:

- **Set the RTU to the service mode**
  Setting the RTU to the service mode activates the LEDs and the LAN interface "X1P1".
  For a period that can be configured in the WBM, the connection of a configuration computer to the LAN interface and the call of the WBM are therefore enabled. This allows the configuration of the RTU to be changed locally during operation.
- **Shut down to safe status**
  When it shuts down to a safe status the RTU books out of the mobile wireless network and completes all writes to the SD card.
  You can then disconnect the device from the power supply. You require shutting down to the safe status for the following situations:
  - Replacing the SIM card
  - Replacing the SD card
  - Replacing a battery when you only use a single battery module (with or without battery expansion modules) and no external power supply.
  - Taking the RTU out of operation
- **Creation of a *.dmp file on SD card**
  All relevant information is collected and saved on the SD card as encrypted *.dmp file. During the operation, the RTU is not reachable and all LEDs light up constantly. The RTU then restarts. A *.dmp file can be analyzed by Support.
- **Resetting to factory settings**
  By resetting to factory settings, the RTU is reset to the status as it was delivered from the factory. This deletes all the configured settings.
  For the precise effects of resetting, refer to the section Resetting to factory settings (Page 379).

Pressing the button

By pressing the button in different ways, the functions described above are triggered:

Duration of pressing the button (seconds)	Function
0 .. < 5 s	**Wake up (service mode)** When woken, the following are activated: • LEDs • LAN interface • DHCP client of the RTU (if configured)
> 5 .. < 10 s	**Shut down to safe status** When it shuts down to a safe state, the RTU disconnects from the mobile wireless network and completes all writes to the SD card.
≥ 10 s	**Resetting to factory settings** If you press the button continuously, a reset is initiated and the "STATUS" LED flashes green.
3x within a second	**Creation of a *.dmp file on the SD card** Press the button three times within a second so that the RTU saves all relevant information on the SD card as encrypted *.dmp file.

4.5 Slots for SIM card and SD card

"◀SIM": Slot for the SIM card

On the underside of the RTU there is a slot marked "◀SIM" for the SIM card you obtain from the network provider of your mobile wireless contract.

Compatible cards

The card slot and the RTU are compatible with the following card formats:

- Mini SIM card (2FF), 25 x 15 mm (ISO/IEC 7810 ID-000)
- Micro SIM card (3FF), 15 x 12 mm (ETSI TS 102 221 V9.0.0) via adapter.

Card errors / diagnostics

Card errors are indicated by the "SIM" LED and entries in the diagnostics buffer.

Inserting the card

Inserting the SIM card is described in the section Inserting the SIM card and SD card (Page 107).

"MC▶": Slot for an optional SD card

At the top right on the front of the RTU there is a slot for an SD card marked "MC ▶". You have the option of using the SD card as an exchangeable storage medium for storing configuration and process data (log files) as well as diagnostics data.

An SD card does not ship with the RTU.

Compatible cards

You will find a list of compatible SD cards in the appendix SD card / SMC (Page 412).

Card errors / diagnostics

Card errors are indicated by entries in the diagnostics buffer.

Inserting the card

Inserting the SD is described in the section Inserting the SIM card and SD card (Page 107).

Retentive storage of important data on the SD card

The SD card is an exchangeable storage medium for storing various data safe from power failure.

Note

Operation with SD card

It is strongly recommended that you only operate the RTU with an SD card, in particular because an SD card is required in the following situations:

- Logging if an error occurs
- Upgrading the firmware version

The following data can be stored on the SD card:

- **Configuration data**
  The configuration data is backed up on the SD card following every change in a configuration file. Storing configuration data on the card serves the following purposes:
  - Copying configuration data to other RTUs
    The configuration file can be edited and can be used to copy configuration data to different RTUs, refer to the section Configuration (Page 144).
  - Device replacement without configuration PC
    If an RTU needs to be replaced for maintenance purposes, by transferring the SD card from the old to the new RTU, the configuration data can be made available to the new RTU. In this case, you do not need a configuration PC.
- **Process data**
  If the Logging function is activated in the WBM. process data acquired by the RTU is saved up on the SD card.
  Certain or all process data can be stored on the card for a certain time or until the maximum storage capacity of the SD card is reached.
- **Diagnostics buffer entries**
  In the WBM you can configure that diagnostics buffer entries for serious events are saved on the SD card.
  The entire diagnostics buffer of the RTU can be saved manually on the SD card.

4.6 QR code

Identification link - Easy to use

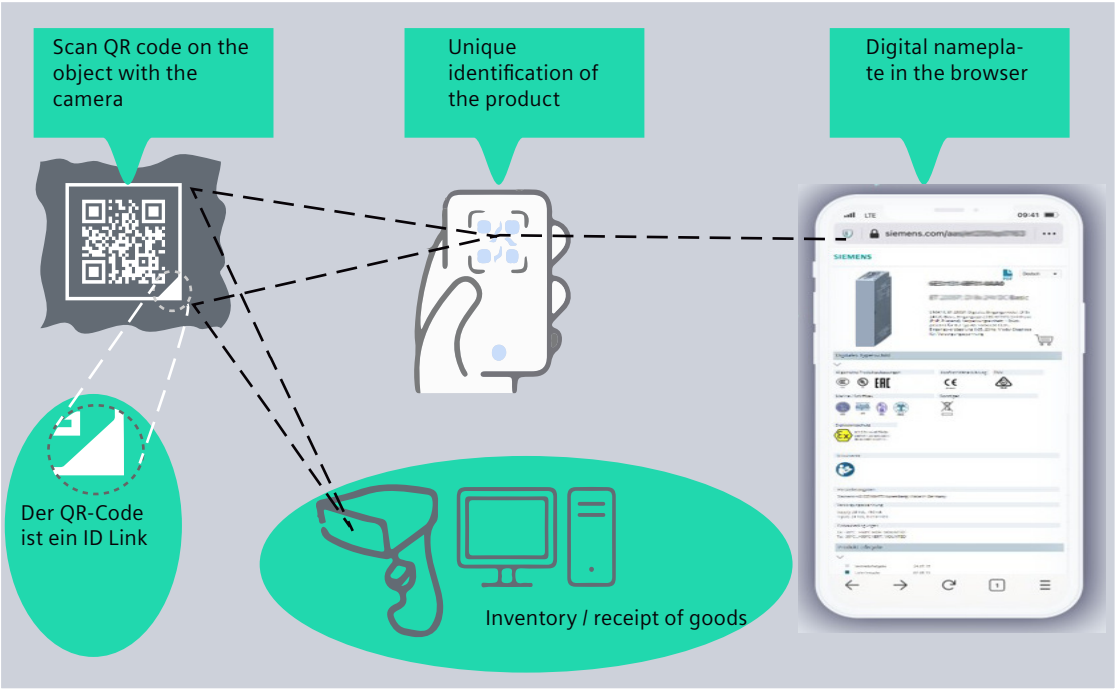

QR code

The QR code on the front of this product and on the packaging uniquely identifies the product.

The QR code is an Identification Link in accordance with IEC 61406-1.

When you scan the QR code, e.g. with a smartphone, you directly open the Siemens web page of the digital nameplate. The web page of the digital nameplate is structured in line with responsive web design.

For your plant documentation, you have the option to connect the link with your data.

Digital nameplate

The digital nameplate is:

- A contribution by Siemens towards reducing the CO_2 footprint and conserving resources.
- An efficient way to access the product information available on the Internet. This information is kept up to date over the entire product life.

You can retrieve the following information about the product on the web page of the digital nameplate:

- Product identification
- User documentation
- Technical specifications
- Certificates, Declaration of Conformity, manufacturer information
- Current software/firmware versions
- Product news and more information

Installation, wiring, commissioning, removal 5

5.1 Important notes on using the device

Safety notices on the use of the device

Note the following safety notices when setting up and operating the device and during all associated work such as installation, connecting up or replacing the device.

WARNING

Safety requirements for installation

The devices are "open equipment" according to the standard IEC 61010-2-201 or UL 61010-2-201 / CSA C22.2 No. 61010-2-201. To fulfill requirements for safe operation with regard to mechanical stability, flame retardation, stability, and protection against contact, the following alternative types of installation are specified:

- Installation in a suitable cabinet.
- Installation in a suitable enclosure.
- Installation in a suitably equipped, enclosed control room.

WARNING

If the device is installed in a cabinet, the inner temperature of the cabinet corresponds to the ambient temperature of the device.

WARNING

Requirements for the cabinet

To comply with EU Directive 2014/34 EU (ATEX 114), UK Regulation SI 2016/1107 or the conditions of IECEx or CCC-Ex, the housing or cabinet must meet the requirements of at least IP54 (according to EN/IEC 60529, GB/T 4208) in compliance with EN IEC/IEC 60079-7, GB 3836.8.

Note

The device can be disconnected from the power supply with the terminal block.

WARNING

Safety notices for operation with a power supply according to "Limited Energy"

1. If the device is supplied by a power supply with limited power (Limited Energy) that complies with IEC/UL61010-1 or VDE 0805-1, no additional power limitation is required according to National Electrical Code (r) (ANSI/NFPA 70).
   If the device is connected to a redundant power supply (two separate power supplies), the combination of the two power supplies must meet these requirements.
   To comply with EU Directive 2014/34/EU (ATEX 114), UK Regulation SI 2016/1107 or the conditions of IECEx or CCC-Ex, the housing or cabinet must meet the requirements of at least IP54 (according to EN/IEC 60529, GB/T 4208) in compliance with EN IEC/IEC 60079-7, GB 3836.3.
2. If the device is operated with a power supply for without power limitation and the entire power requirement does not exceed 100 W, a fuse must be installed between the power supply and each supply input of the device to meet the requirements for limited power (Limited Energy) according to IEC/UL61010-1 or VDE 0805-1. For more information, see "Suitable fusing for the power supply cables" below.
   To comply with EU Directive 2014/34/EU (ATEX 114), UK Regulation SI 2016/1107 or the conditions of IECEx or CCC-Ex, the housing or cabinet must meet the requirements of at least IP54 (according to EN/IEC 60529, GB/T 4208) in compliance with EN IEC/IEC 60079-7, GB 3836.3.
3. If the device is operated with a power supply without power limitation and the entire power requirement exceeds 100 W, the device must be installed in a fire protection housing according to ANSI/UL-61010-1:2018, paragraph 9.3.

5.1.1 Notes on use in hazardous areas

WARNING

The device may only be operated in an environment with pollution degree 1 or 2 as described in EN/IEC 60664-1, GB/T 16935.1.

WARNING

EXPLOSION HAZARD

The device must not be opened.

WARNING

EXPLOSION HAZARD

DO NOT OPEN WHEN ENERGIZED.

WARNING

Lack of equipotential bonding

If there is no equipotential bonding in hazardous areas, there is a risk of explosion due to equalizing current or ignition sparks.

- Ensure that equipotential bonding is available for the device.

WARNING

Unprotected cable ends

There is a risk of explosion due to unprotected cable ends in hazardous areas.

- Protect unused cable ends according to IEC/EN 60079-14.

WARNING

Unsuitable cables or connectors

Risk of explosion in hazardous areas

- Only use connectors that meet the requirements of the relevant type of protection.
- If necessary, tighten the connector screw connections, device fastening screws, grounding screws, etc. according to the specified torques.
- Close unused cable openings for electrical connections.
- Check the cables for a tight fit after installation.

WARNING

Insufficient isolation of intrinsically safe and non-intrinsically safe circuits

Risk of explosion in hazardous areas

- When connecting intrinsically safe and non-intrinsically safe circuits, ensure that the galvanic isolation is performed properly in compliance with local regulations (e.g. IEC 60079-14).
- Observe the device approvals applicable for your country.

WARNING

EXPLOSION HAZARD

Do not press the button "WKUP RESET" if there is a potentially explosive atmosphere.

WARNING

EXPLOSION HAZARD

DO NOT CONNECT OR DISCONNECT EQUIPMENT WHEN A FLAMMABLE OR COMBUSTIBLE ATMOSPHERE IS PRESENT.

WARNING

EXPLOSION HAZARD

DO NOT OPEN ENCLOSURE OR REPLACE BATTERY WHEN A FLAMMABLE OR COMBUSTIBLE ATMOSPHERE IS PRESENT.

WARNING

Battery replacement

Always replace both batteries of a battery holder with new batteries. Do not mix new with used batteries. Do not mix different manufacturers' batteries. Properly discard old batteries, not for recharge or reuse.

WARNING

EXPLOSION HAZARD

SUBSTITUTION OF COMPONENTS MAY IMPAIR SUITABILITY FOR CLASS I, DIVISION 2 OR ZONE 2.

Note

You must not install the device on a wall in hazardous areas.

WARNING

EXPLOSION HAZARD

The equipment is intended to be installed within an enclosure/control cabinet. The inner service temperature of the enclosure/control cabinet corresponds to the ambient temperature of the module. Use cables with a maximum permitted operating temperature of at least 20 °C higher than the maximum ambient temperature.

WARNING

When used in hazardous environments corresponding to Class I, Division 2 or Class I, Zone 2, the device must be installed in a cabinet or a suitable enclosure.

5.1.2 Notices for use in hazardous areas according to ATEX / UKEX / IECEx

WARNING

Suitable cables at high ambient temperatures in hazardous area

Use heat-resistant cables with an ambient temperature ≥ 60 °C; these cables must be rated for an ambient temperature that is at least 20 °C higher. The cable entries used on the housing must comply with the IP degree of protection required by EN IEC 60079-0 / GB 3836.1.

WARNING

Requirements for the cabinet

To comply with EU Directive 2014/34 EU (ATEX 114), UK Regulation SI 2016/1107 or the conditions of IECEx or CCC-Ex, the housing or cabinet must meet the requirements of at least IP54 (according to EN/IEC 60529, GB/T 4208) in compliance with EN IEC/IEC 60079-7, GB 3836.8.

WARNING

Transient overvoltages

Take measures to prevent transient surges of more than 40% of the rated voltage. Under no circumstances may transient surges exceed 119 V. This is guaranteed if you only operate the devices with SELV (safety extra-low voltage) or PELV (protective extra low voltage).

WARNING

If a device is operated in an ambient temperature of more than 60 °C, the temperature of the device housing may be higher than 70 °C. The device must therefore be installed so that it is only accessible to service personnel or users that are aware of the reason for restricted access and the required safety measures at an ambient temperature higher than 60 °C.

WARNING

DIN rail

In the ATEX and IECEx area of application only the Siemens DIN rail 6ES5 710-8MA11 may be used to mount the RTU and the battery modules.

5.1.3 Instructions for use in hazardous areas according to FM and UL HazLoc

WARNING

EXPLOSION HAZARD

DO NOT DISCONNECT WHILE CIRCUIT IS LIVE UNLESS AREA IS KNOWN TO BE NON-HAZARDOUS.

This equipment is suitable for use in Class I, Division 2, Groups A, B, C and D or non-hazardous locations only.

This equipment is suitable for use in Class I, Zone 2, Group IIC or non-hazardous locations only.

WARNING

If the cable or conduit entry point exceeds 70 °C or the branching point of conductors exceeds 80 °C, special precautions must be taken. If the equipment is operated in an air ambient in excess of 70 °C, only use cables with admitted maximum operating temperature of at least 85 °C.

WARNING

If a device is operated in an ambient temperature of more than 60 °C, the temperature of the device housing may be higher than 70 °C. The device must therefore be installed so that it is only accessible to service personnel or users that are aware of the reason for restricted access and the required safety measures at an ambient temperature higher than 60 °C.

WARNING

Wall mounting outside of the control cabinet or housing does not fulfill the requirements of the FM approval.

WARNING

Wall mounting is only permitted if the requirements for the housing, the installation regulations, the clearance and separating regulations for the control cabinets or housings are adhered to. The control cabinet cover or housing must be secured so that it can only be opened with a tool. An appropriate strain-relief assembly for the cable must be used.

5.1.4 Safety when connecting (devices without NEC Class 2)

Safety notices for operation with a power supply not complying with NEC Class 2

If you operate the device in a control cabinet, you can use a power supply that does not comply with NEC Class 2. When connecting up the device, keep to the safety notices listed below.

WARNING

Safety extra low voltage

The device is designed for operation with a directly connectable safety extra-low voltage (SELV) according to UL/IEC 61010-1 and UL/IEC 61010-2-201 whose output power corresponds to "Limited Energy" according to UL/IEC 61010-1.

NOTICE

Suitable fuse for the power supply cables (corresponds to "Limited Energy")

The current on the terminal may not exceed 3 A. Use a fuse for the power supply that is suitable for protection of AC/DC power supply circuits *) and protects against currents > 3 A.

- In areas subject to the NEC or CEC, the fuse must meet the following requirements:
  - Suitable for AC/DC *) (min. 60 V / 3 A)
  - Breaking current at least 10 kA
  - Approval according to ANSI/UL 248-14 (suppl. fuses), ANSI/UL 248-4 (Class CC), ANSI/UL 248-8 (J), ANSI/UL 248-15 (T), or CSA C22.2-4 No. 248.14 (suppl. fuses), No. 248-4 (Class CC), No. 248-8 (J), No. 248-15 (T)
- In other areas, the fuse must meet the following requirements:
  - Suitable for AC/DC *) (min. 60 V / 3 A)
  - Breaking current at least 10 kA
  - Approval according to IEC/EN 60947-1/2/3 or IEC/EN 60898-1/2 for circuit breakers
  - Breaking characteristics: B or C
  - Approval according to IEC/EN 60127-1 for fuses
  - Breaking characteristics: max. 120 s at 2 x I_n (corresponds to melting integral $I^2t < 4320$)

If the properties of the supplying current source are known, the following fuse is also possible:

- In areas subject to the NEC or CEC, the fuse must meet the following requirements:
  - Suitable for AC/DC *) (min. 60 V / 3 A)
  - Breaking current > highest possible current of the current source (incl. short circuit current and fault)
  - Approval according to UL 1077 or CSA C22.2 No. 235
- In other areas, the fuse must meet the following requirements:
  - Suitable for AC/DC *) (min. 60 V / 3 A)
  - Breaking current > highest possible current of the current source (incl. short circuit current and fault)
  - Approval according to IEC/EN 60934
  - Breaking characteristics: max. 120s at 2 x I_n

*) AC or DC depending on availability

5.1.5 Device defective

Device defective

If a fault develops, please send the device to your Siemens representative for repair. Repairs on-site are not possible.

5.2 Installation

NOTICE
Improper mounting Improper mounting may damage the device or impair its operation. • Before mounting the device, always ensure that there is no visible damage to the device. • Mount the device using suitable tools. Observe the information in the respective section about mounting.

Prior to installation

Refer to the information in the section Requirements for commissioning (Page 101) before you start to install the RTU.

You will find the device dimensional is in the section Dimension drawings (Page 401).

Installation location

NOTICE
Installation location - Dependency of the temperature range The module must be installed so that its upper and lower ventilation slits are not covered, allowing adequate ventilation. Above and below the device, there must be a clearance of 25 mm to allow air to circulate and prevent overheating. Remember that the permitted temperature ranges depend on the position of the installed device. You will find the permitted temperature ranges in the section Technical specifications (Page 383).

Installation of the rack	Installation position of the RTU
Horizontal installation of the rack (DIN rail)	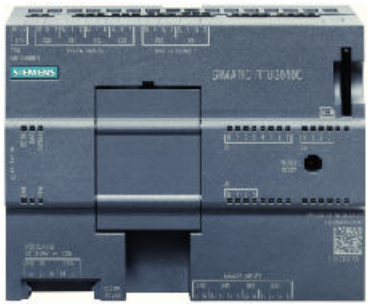
Vertical installation of the rack (DIN rail)	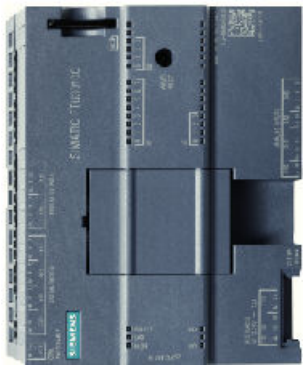

Installing the RTU

Note

Protecting the battery modules from slipping on the DIN rail

When mounting in the protective housing that can be ordered as an accessory, there are two end retainers that are fitted to both ends of the group of devices. The end retainers prevent the RTU and battery module from separating under mechanical load.

If you do not mount the RTU or the battery module in a protective housing from the accessories program, prevent the battery module from slipping with a suitable clamping device, e.g. a Siemens end retainer 8WA1808.

When using the device in the areas of application ATEX or IECEx, note the information on the DIN rail being used in section Notices for use in hazardous areas according to ATEX / UKEX / IECEx (Page 85).

- If you use a battery module, start at step 1.
- If you do not use a battery module, start at step 3.

Table 5-1 Procedure for installation

Step	Execution	Notes and explanations
1	Remove the covers on the left-hand side of the RTU. When using more than one battery module remove the covers of all battery modules with the exception of the cover of the battery module on the far left: 1. Insert the tip of a slotted screwdriver in the gap above the cover. 2. Lever the cover carefully out of its holder. 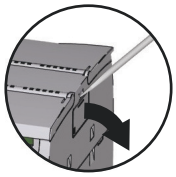 3. In every battery module you use insert the supplied 12-pin adapter in the right socket. **Note:** At this time do not put any batteries in the battery modules. See section Commissioning and starting up the RTU (Page 102) for information on this.	Recommendation: Store the covers in a safe place in case they need to be used later.
2	Secure the DIN rail in the protective housing.	Use a 35 mm DIN rail.
3	Snap the RTU and the battery modules to the left of the RTU onto the DIN rail.	
4	Push the battery modules (left) and RTU (right) together carefully until the side contacts between the RTU and all battery modules are fully closed.	

Mounting the extension board (optional)

Note

Insert and remove only when power to the RTU is off

The extension board cannot be inserted or removed during operation of the RTU. This could result in damage to the RTU. The RTU only checks whether the card is inserted during startup.

Table 5-2 Procedure for installation

Step	Execution	Notes and explanations
1	When using the extension board, remove the covers: 1. Insert the tip of a slotted screwdriver in the gap above the cover. 2. Lever the cover carefully out of its holder.	Recommendation: Store the cover in a safe place in case it needs to be used later.
2	Insert the extension board into the slot from above until you hear it click into place.	

5.3 Connecting

WARNING

Unsuitable cables or connectors

Risk of explosion in hazardous areas

- Only use connectors that meet the requirements of the relevant type of protection.
- If necessary, tighten the connector screw connections, device fastening screws, grounding screws, etc. according to the specified torques.
- Close unused cable openings for electrical connections.
- Check the cables for a tight fit after installation.

WARNING

Lack of equipotential bonding

If there is no equipotential bonding in hazardous areas, there is a risk of explosion due to equalizing current or ignition sparks.

- Ensure that equipotential bonding is available for the device.

WARNING

Unprotected cable ends

There is a risk of explosion due to unprotected cable ends in hazardous areas.

- Protect unused cable ends according to IEC/EN 60079-14.

WARNING

Improper installation of shielded cables

There is a risk of explosion due to equalizing currents between the hazardous area and the non-hazardous area.

- Ground shielded cables that cross hazardous areas at one end only.
- Lay a potential equalization conductor when grounding at both ends.

WARNING

Insufficient isolation of intrinsically safe and non-intrinsically safe circuits

Risk of explosion in hazardous areas

- When connecting intrinsically safe and non-intrinsically safe circuits, ensure that the galvanic isolation is performed properly in compliance with local regulations (e.g. IEC 60079-14).
- Observe the device approvals applicable for your country.

5.3.1 Connecting devices to the extension board

5.3.1.1 Modbus devices

Connecting Modbus devices

The expansion card has two terminals "A" (Data+) and "B" (Data-) for connecting RS-485 wiring with up to 16 Modbus devices.

With RS-485 wiring, a termination resistor of 120 Ω must be connected at both bus ends. When older RS-485 components are used without fail-safe functionality, fail-safe resistors also need to be attached in order to guarantee a minimum differential voltage of 200 mV with a high-resistance bus. The fail-safe resistors are usually attached at the bus master.

The HART/RS485 expansion card features fail-safe resistors that can be connected internally. In contrast, the termination resistors need to be attached externally to the two bus ends.

However, the fail-safe resistors also increase the power requirements and, for this reason, these resistors are switched off outside of the update cycle of the RTU. For this reason, communication of the remaining bus components is only possible with restrictions in sleep mode of the RTU, for example.

Note

Connection to terminals

- The RS-485 connections are not protected against the connection of 24 V DC at the terminals "A" and "B". The connection can lead to a defect in the expansion card or the RTU.
- For fault-free operation of externally supplied bus devices, the potential connections of the devices must be connected to the reference potential of the RTU. The "CTRL M" terminal is provided on the expansion card for this.

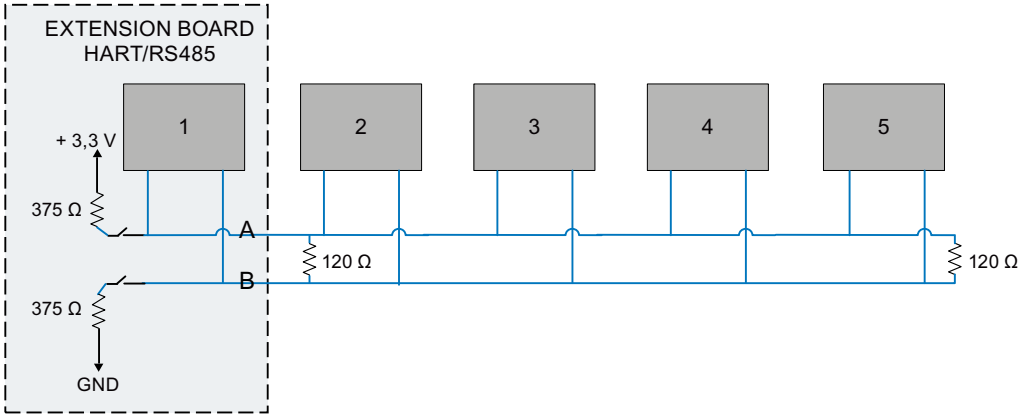

Figure 5-1 Connection of Modbus devices to expansion card

5.3.1.2 HART devices

Connecting HART devices

The expansion card allows the connection of up to 16 sensors (e.g. analog sensors for flow and level measurement) via the HART Multidrop protocol to the RTU. Several HART devices can be connected in HART Multidrop mode. Note the following:

- The HART addresses of the connected devices must be unique.
- The current must be set to 4 mA.

The extension board has two terminals "HART-OUT" and "HART-R" as well as the terminals "L+" (12/24 V DC) and "M" for connecting HART Multidrop devices. Passive sensors can be supplied via the 12/24 V DC terminal of the module. It is also possible to connect sensors with their own supply. A common GND potential must be established in this case.

The HART Multidrop bus must be operated with 250 Ohm resistance to GND. For this purpose, you can either use an external resistor or use the 250 Ohm resistor of the card or expansion card through connection to the "HART-R" terminal.

You can find additional information in the HART Networks Application Guide, see Bibliography /10/ (Page 441).

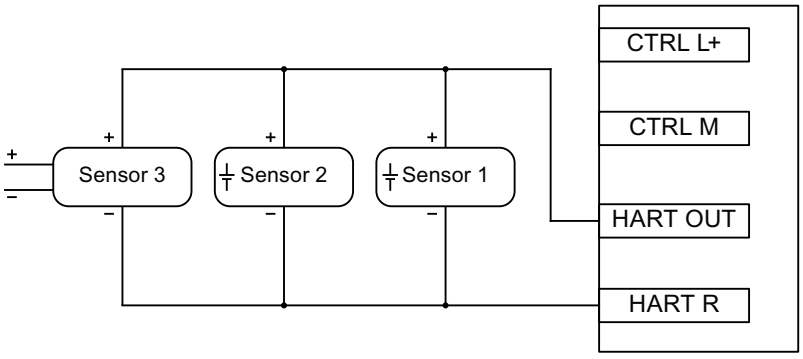

Figure 5-2 Connection of active sensors with self-supply and internal resistor

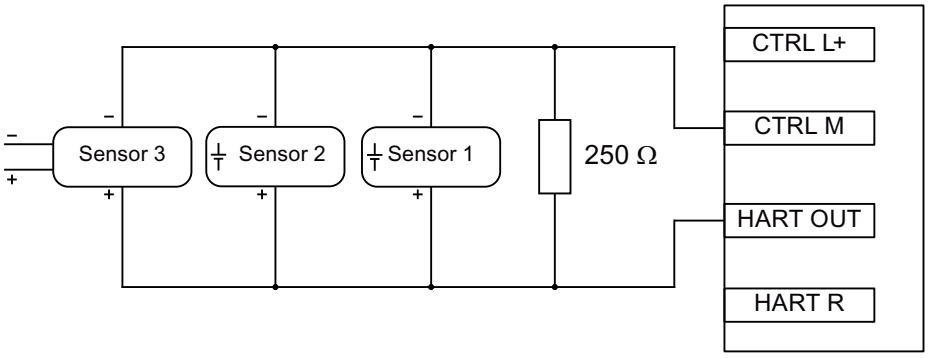

Figure 5-3 Connection of active sensors with self-supply and external resistor

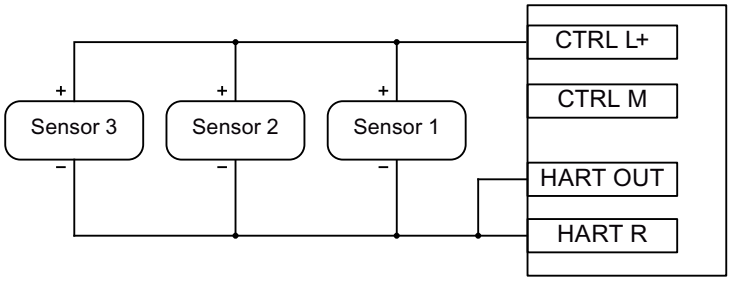

Figure 5-4 Connection of passive sensors with power supply via expansion card and internal resistor

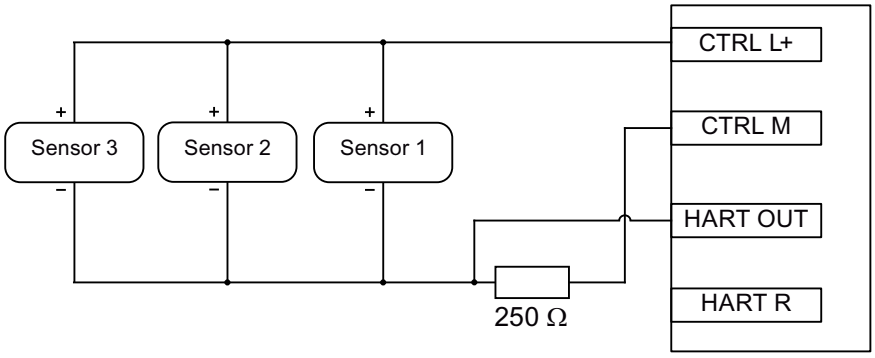

Figure 5-5 Connection of passive sensors with power supply via expansion card and external resistor

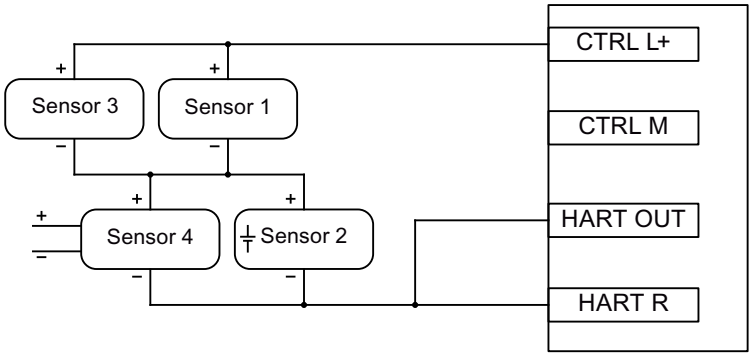

Figure 5-6 Mixed operation of active and passive sensors with internal resistor

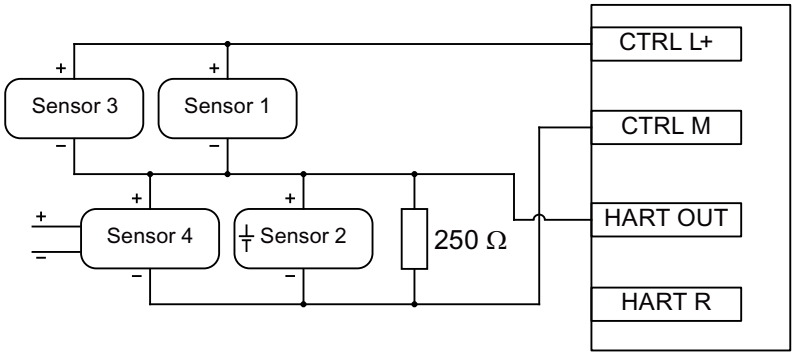

Figure 5-7 Mixed operation of active and passive sensors with external resistor

5.3.2 Connecting up the RTU

Description of the connectors and technical specifications

For a description connectors and connectable devices, refer to the section Interfaces and connectors (Page 69).

You will find the terminal sizes, maximum torque and technical details of the connectors in the section Technical specifications (Page 383).

Notes on wiring

Note

Connection only with power off

1. First wire all the connectors of the RTU.
2. Turn the power supply on only after the RTU has been completely wired and connected.

NOTICE

Different power supplies for digital outputs and device

If the power supply of the digital outputs is different from that of the device, the following wiring rules must be observed:

- Separate all power supplies electrically from each other.
- If a common reference potential is required for the power supplies, only connect the potentials "0 V" or the potentials "N" with each other.

Connecting the mobile wireless antenna (XR1A1)

If you use communication via mobile wireless, connect the antenna to the SMA socket of the RTU.

Protect the antenna connector with a suitable overvoltage protection module if you install the antenna outdoors. See section Grounding and overvoltage protection (Page 109) for information on this.

An antenna is not included in the scope of delivery. You will find the compatible antenna in the appendix Antennas and accessories (Page 414).

RTU30x1C: Connecting the GPS antenna (XR2A1)

If you use position determination or time synchronization via GPS, connect a GPS antenna to the GPS SMA socket of the RTU.

Protect the antenna connector with a suitable overvoltage protection module if you install the antenna outdoors. See section Grounding and overvoltage protection (Page 109) for information on this.

An antenna is not included in the scope of delivery. You will find the compatible antenna in the appendix Antennas and accessories (Page 414).

Connecting the digital inputs X20 to X23

You can connect two sensors to each of the 4 terminal blocks of the digital inputs. In total, up to 8 sensors can be connected.

Assignment of the contacts based on the example of terminal block X20 for digital outputs 0 and 1:

- **M** Reference potential for inputs 0 and 1
- **0** Input 0
- **1** Input 1

The terminal blocks X21 to X23 are assigned accordingly for digital inputs 2 to 7.

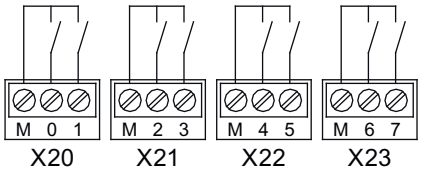

Figure 5-8 Wiring of the digital inputs X20 to X23

For the power supply of the sensors, you can use the control outputs X10 or X11 of the RTU.

Connecting the digital outputs X30 to X31

The outputs are designed as bistable electromechanical relays that switch through the signal of the relevant connector 0 / 1 / 2 / 3 (reference potential) to the output 0L / 1L / 2L / 3L. The switching status is also retained in sleep mode of the RTU.

The terminals 0 / 1 / 2 / 3 can be supplied with voltage via the control outputs X10/X11 of the RTU if this is configured. You specify the voltage value of control outputs X10/X11 in the WBM ("Operating mode" > "Power supply") for the outputs X10, X11, X40 and X42 together.

You can connect two actuators to each of the two terminal blocks of the digital outputs. In total, up to 4 actuators can be connected.

Assignment of the contacts based on the example of terminal block X30 for digital outputs 0 and 1:

- **0L / 0** Output 0
- **1L** / 1 Output 1

Terminal block X31 is assigned accordingly, for digital outputs 2+3.

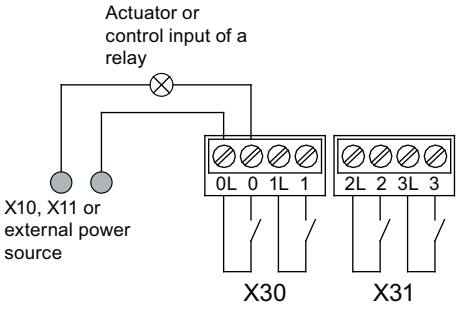

Figure 5-9 Wiring of the digital outputs X30 to X31

For the power supply of the connected actuators, you can use the control outputs X10 or X11 of the RTU.

Connecting the digital outputs X32 ... X33 (RTU30x1C)

The outputs are designed as electronic relays that switch through the signal of the relevant connector 4 / 5 / 6 / 7 (reference potential) to the output 4L / 5L / 6L / 7L.

The terminals 4 / 5 / 6 / 7 can be supplied with voltage via the control outputs X10/X11 of the RTU if this is configured. You specify the voltage value of control outputs X10/X11 in the WBM ("Operating mode" > "Power supply") for the outputs X10, X11, X40 and X42 together.

You can connect two actuators to each of the two terminal blocks X32 and X33. In total, up to 4 actuators can be connected.

Assignment of the contacts based on the example of terminal block X32 for digital outputs 4 and 5:

- **4L / 4** Output 4
- **5L / 5** Output 5

Terminal block X33 is assigned accordingly for digital outputs 6+7.

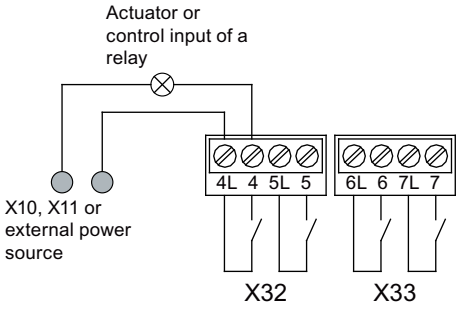

Figure 5-10 Wiring of digital outputs X32 to X33

For the power supply of the connected actuators, you can use the control outputs X10 or X11 of the RTU.

Connecting the analog inputs X40 to X43

You can connect up to 4 analog measuring transducers to the RTU.

The terminal blocks X40 and X42 each serve to control and supply 2 sensors. You specify the voltage value (12 or 24 V) in the WBM ("Operating mode" > "Power supply").

The terminal blocks X41 and X43 are each used to connect the signal wires of two sensors.

Assignment of the contacts based on the example of terminal block X40 and X41:

- **X40**
  - **L+** Control output for sensors 0 and 1
  - **M** Ground for sensors 0 and 1
- **X41**
  - **0+** Input "+" of sensor 0
  - **0-** Input "-" of sensor 0
  - **1+** Input "+" of sensor 1
  - **1-** Input "-" of sensor 1

The terminal blocks X42 and X 43 are assigned accordingly for sensors 2 and 3.

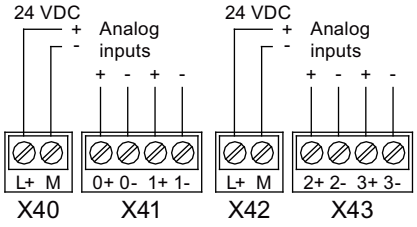

Figure 5-11 Wiring of the analog inputs X40 to X43

Depending on the measuring transducer type, make the connections as shown below.

As an example the figures show the connection of a measuring transducer at terminal block X41 (analog input "0").

Connecting a 2-wire measuring transducer

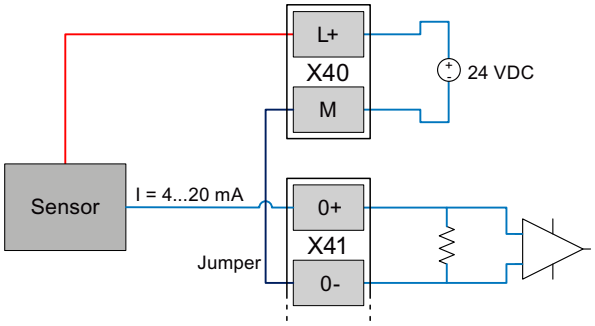

Figure 5-12 Connecting a 2-wire measuring transducer

Terminal "M" of the terminal block X40 and terminal "0-" of terminal block X41 need to be bridged.

Connecting a 3-wire measuring transducer

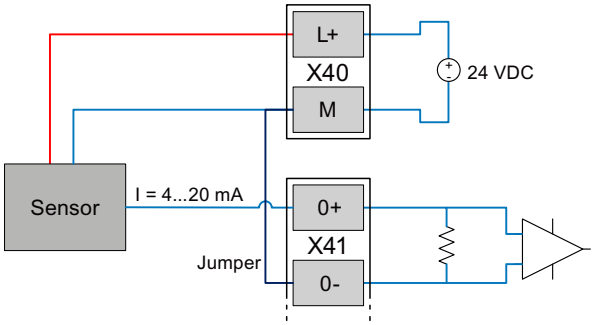

Figure 5-13 Connecting a 3-wire measuring transducer

The terminal "M" of the terminal block X40 and terminal "0-" of terminal block X41 need to be bridged.

Connecting a 3-wire measuring transducer with external power supply

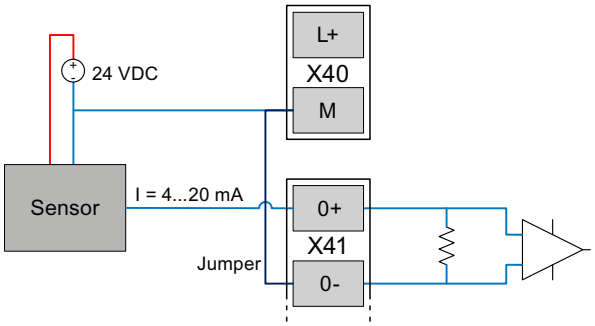

Figure 5-14 Connecting a 3-wire measuring transducer with external power supply

The terminal "M" of the terminal block X40 and terminal "0-" of terminal block X41 need to be bridged.

Connecting a 4-wire measuring transducer

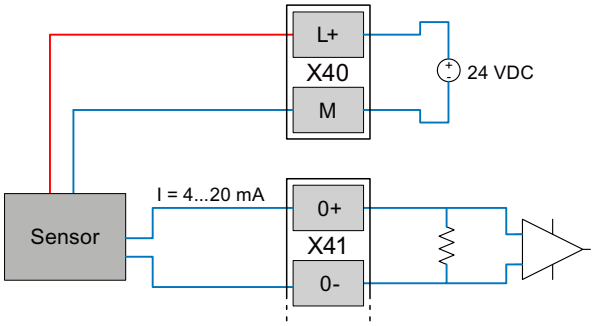

Figure 5-15 Connecting a 4-wire measuring transducer

Connecting a 4-wire measuring transducer with external power supply

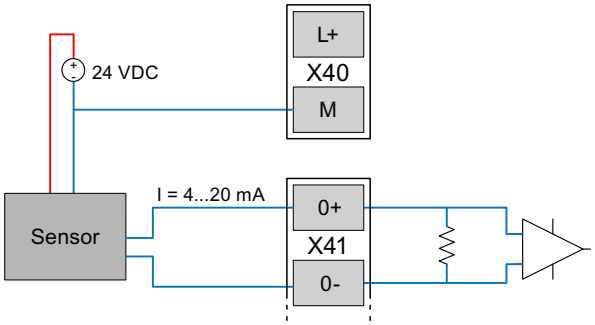

Figure 5-16 Connecting a 4-wire measuring transducer with external power supply

Connecting a temperature sensor

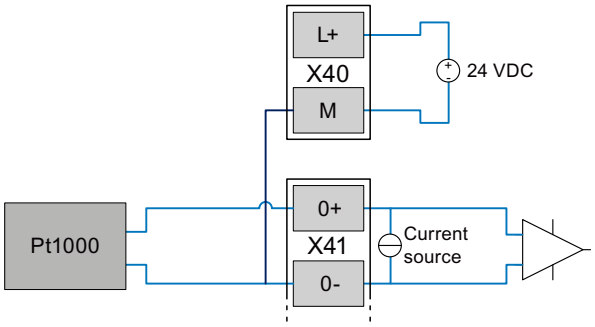

Figure 5-17 Connecting a temperature sensor

Connecting the 12/24 V control output X11 to sensors and switches

Connect the power supply for sensors and/or switches to terminal block X11.

- **M** Reference potential
- **L+** Voltage 12/24 VDC

This connector is not suitable for the power supply of powerful actuators. Note the maximum power consumption in the section Technical specifications (Page 383).

You specify the voltage value (12 or 24 V) in the WBM ("Operating mode" > "Power supply").

Connecting the 12/24 V control output X10 CTRL to sensors and switches

To supply sensors, actuators and switches of actuators connected to the RTU, you can connect these to the control output X10 CTRL.

- **X10 CTRL**
  - **L+** Voltage 12/24 VDC
    You specify the voltage value (12 or 24 V) in the WBM ("Operating mode" > "Power supply").
  - **M** Reference potential

Connecting the external power supply to X10 IN

Finally connect the external power supply (voltage input) of the RTU to terminal block X10 IN.

Only connect safety extra-low voltages (SELV), refer to the section Interfaces and connectors (Page 69).

- **X10 IN**
  - ⏚ Functional ground
    Do not use the functional ground for grounding the RTU. For grounding the system, refer to the section Grounding and overvoltage protection (Page 109).
  - **L+** Voltage input 18.8 to 28.8 VDC
  - **M** Reference potential

Note the maximum power consumption in the section Technical specifications (Page 383).

5.4 Commissioning

5.4.1 Requirements for commissioning

Prior to commissioning

The following requirements must be met before you commission the RTU:

- **Configuring the RTU**
  For the communication of the RTU with a configuration computer via the LAN interface, you need to set the interface of the configuration computer according to the subnet parameters of the RTU, refer to section LAN (Page 158).
  Alternatively, you can obtain the IP address automatically via the DHCP server of the RTU. To do this, set a configuration computer in such a way that it can obtain the IP address automatically.
  In the factory state, the RTU is set to manual IP address assignment with IP 192.168.0.3 and the DHCP server is activated.
- **Formatted SD card (optional)**
  If you want to use an SD card, make sure that the card is correctly formatted, see also the section SD card / using and formatting SMC (Page 106).

Requirements for using mobile wireless services

- **Configuring the RTU**
  For the communication of the RTU with a master station or the cloud via mobile wireless at least the following parameters must be configured in the WBM of the RTU:
  - Activation of the mobile wireless interface with suitable parameters on the WBM page "WAN".
  - Configuration of the protocol-specific parameters on the WBM page "Telecontrol" or "MQTT".
  - If you use communication via the DNP3 or IEC protocol, an OpenVPN server must exist and the RTU must be configured accordingly, refer to the WBM page "OpenVPN client".
- **Mobile wireless contract**
  You require a suitable contract with a mobile wireless network provider, refer to the section Scope of delivery, accessories, requirements (Page 51).
- **Plugged-in SIM card**
  The SIM card belonging to the mobile wireless contract is plugged into the RTU.
  When possible, insert the SIM card in the RTU prior to mounting and connecting up, see section Inserting the SIM card and SD card (Page 107).
  With contracts with a PIN, the PIN must be configured, refer to the section Mobile wireless settings (Page 163).
- **Locally available mobile wireless network**
  Make sure that a configured mobile wireless network is available in the area of the station, refer to the section Mobile wireless settings (Page 163).

5.4.2 Commissioning and starting up the RTU

Note

Startup with an SD card that is not brand new

If the RTU starts up with an SD card that is not brand new, observe the behavior of the RTU in terms of the configuration file used, refer to the section Configuration (Page 144).

Requirements for commissioning

Prior to commissioning the RTU, make sure that the following conditions are met:

- The system is completely installed:
  RTU, battery modules and extension board if required, protective housing, associated sensors/actuators, antenna if required, external power supply if required
- The RTU and the sensors/actuators belonging to it are completely wired.
- The communication partner - if configured - is reachable.

- The configuration data is loaded on the RTU.

Note

Copying the configuration data to other RTUs

If you install a lot of RTUs which use a lot of identical configuration data, you can transfer the configuration data of one RTU to the other RTUs using the configuration file. For information on this refer to the WBM > "Maintenance".

- When mobile wireless communication is intended: The SIM card is plugged in.
- When logging of the process data is intended: The SD card is plugged in.
- The power supply is not yet turned on or connected.

Note

Connecting the power supply:

- With power supply via battery modules:
  The batteries have not yet been put in the battery modules.
- With external power supply:
  The external power supply is connected, but not yet turned on.

See also section Requirements for commissioning (Page 101).

Commissioning the RTU

Commission the RTU by supplying the RTU with voltage. The startup behavior of the RTU is described below.

Depending on the type of power supply, follow the steps below:

Supply of the RTU only via external power supply

Turn on the external power supply.

The RTU starts up.

Supply of the RTU only via battery modules

NOTICE
Do not place the battery holders on a conductive surface Never place the battery holders on an electrically conductive surface (e.g. the outer housing). The battery contacts can establish a short-circuit connection in the battery via a conductive surface causing the battery to be destroyed. **Only use undamaged batteries** Use only undamaged batteries. A battery with a damaged casing can cause a short-circuit through the metal clips.

Note

Battery types

Only use the batteries described in the Appendix of the manual. Correct battery operation is only ensured with these battery types.

If you use two battery modules or one battery module with battery expansion modules, start with the first battery module.

For information on the location and labeling of the battery modules and battery expansion modules, refer to the appendix Battery module and battery expansion module (Page 403).

1. Take the battery holder out of the battery module.
2. Insert the batteries in the battery holder.
3. Put the battery holder in the battery module.
4. Plug the connector of the battery holder in the socket X10 BATTERY of the battery module.

If applicable, perform the same steps for the battery expansion modules and for the second battery module including its expansion modules.

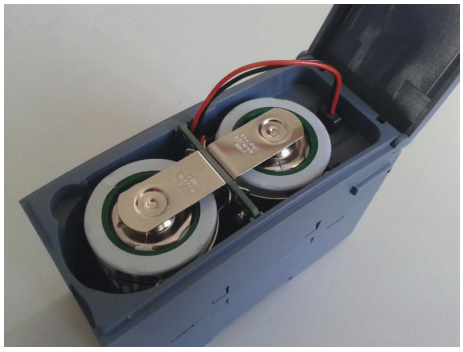

Figure 5-18 Battery module (not mounted) with inserted battery holder, cable connected.

Note

Starting battery operation

The RTU only starts up when there are two batteries with adequate voltage and capacity in the main battery module. The RTU cannot start up with the other battery modules.

Note

Battery switchover only when a configuration exists.

The RTU only switches between battery module 1 and 2 if you have configured battery modules in the WBM and have connected them in the WBM. For configuration and changing batteries, refer to the section Power supply (Page 197).

Supply of the RTU via battery modules and external power supply

1. Turn on the external power supply.
   The RTU starts up.
2. Connect the batteries as described above.

Startup behavior of the RTU

During startup the RTU behaves as follows:

- The LED "STATUS" flashes green.
- If an SD card is plugged in, the RTU searches for the configuration data stored on the card.
  - When it has found the configuration data on the card, the RTU reads in the configuration data.
  - If the configuration data is not found on the card, the RTU uses the configuration data in its internal memory.
    If the RTU does not find any configuration data in its internal memory it remains in service mode. The "STATUS" LED is flashing red.
- The RTU changes to update mode:
  - All connected and configured inputs are read.
  - The read data is processed if programmed.
  - The data is saved.
  - The outputs are updated if programmed.
- If communication is configured and the requirements for data transfer are met, the RTU connects to its communication partner for the first time.
  The following requirements must be met:
  - The inputs are configured, refer to the section Tags (Page 205).
  - The tags are processed by the program, refer to the section Program blocks (Page 285).
  - The data points have been created, refer to the section Telecontrol and MQTT (Page 243).
  - The RTU has a connection to the mobile wireless network, refer to the section LEDs (Page 64) (wireless status LEDs) or via the LAN interface and an external router, the RTU has access to the Internet.
- When the data transfer is complete, or if no communication is configured, the RTU changes to sleep mode.

Checking the antenna position

If the RTU is in communication mode, based on the signal strength displayed in the WBM, you can check the optimum alignment of the antenna in different positions. For more on the display of the signal strength refer to the section Wireless cell (Page 167).

5.4.3 Configuration via SINEC PNI

The RTU supports the protocol DCP (Discovery Configuration Protocol).

To execute write commands via DCP, the device must be in the "factory setting" state ("STATUS" LED is flashing red). Read commands are enabled permanently.

You can set the configuration via the SINEC PNI software (Primary Network Initialization).

SINEC PNI

- You can find SINEC PNI on the Internet pages of Siemens Industry Online Support: Link: (https://support.industry.siemens.com/cs/ww/en/ps/26672/dl)
- You will find further information in the online help or in the "Network management SINEC PNI" operating instructions.

Configuration options

The following configurations are possible via SINEC PNI:

- First assignment of the IP address for the device.
- Finding configurable devices in the network ("Discovery").
- Device availability ("LED flashing"): Performs an LED flashing test.
- PROFINET device name: Assignment of the PROFINET device name that is used as the station name of the RTU.

5.4.4 SD card / using and formatting SMC

Formats of the memory cards

If you want to use a card as an exchangeable storage medium, the formatting must meet the requirements of the RTU:

- **SIMATIC Memory Card (SMC)**
  Directly from the factory an SMC is already correctly formatted and can be used in the RTU without any further preparation.
- **Standard SD card**
  File format FAT32

Using an SMC in a card reader

If you use an SMC in a commercially available card reader under Windows, the card must always be disabled using the "Eject" or "Safely remove hardware" function before you take the card from the card reader. Otherwise loss of data may result.

Formatting an SD card or SMC

When formatting an SD card or an SMC that has already been used, note that all the data on the card is deleted when you format.

- **Formatting a standard SD card**
  If the card is not formatted in the file format FAT32, format the card as described in the manual of the card or the card reader.
- **Use of an SMC**
  An SMC must not be formatted like a standard SD card otherwise it cannot be used. You will find instructions on repairing and formatting on the pages of the Siemens Industry Online Support in the following FAQ:
  Link: (https://support.industry.siemens.com/cs/ww/en/view/69063974)

5.4.5 Inserting the SIM card and SD card

Inserting the SIM card

Recommendation: Insert the SIM card in the RTU before you install it. After installing and connecting up the answer you, the space for inserting the SIM card may be very restricted.

Before inserting or changing the SIM card make sure that the power supply is turned off.

Step	Execution	Notes and explanations
①	Release the slide for the SIM card on the bottom of the RTU by gently pressing the release pin beside the slot "◀SIM".	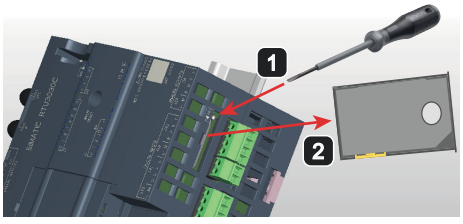
②	Remove the slide from the housing.	
③	Insert the SIM card in the slide as illustrated.	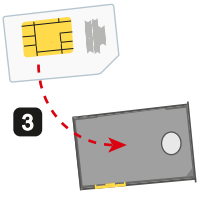
④	Push the slide back into the housing, where it locks gently in place.	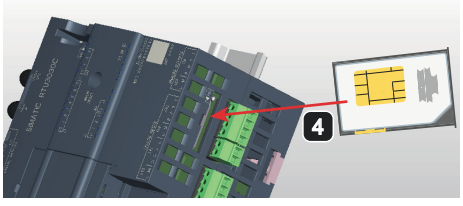

Removing the SIM card

Note

Pulling the SIM card

Do not remove the SIM card while the device is operating. First shut the RTU down to the safe status, refer to the section Operating status (Page 155).

Remove the SIM card as described above.

Inserting an SD card

If you use an SD card (optional), make sure that it is correctly formatted. For information on formatting refer to the section SD card / using and formatting SMC (Page 106).

Before inserting the SD card make sure that the power supply is turned off.

Insert the card in the slot "MC▶" until it locks gently in place. Make sure that the card is in the correct position.

Removing the SD card

Note

Pulling the SIM card

Do not remove the SD card while the device is operating. First shut the RTU down to the safe status, refer to the section Operating status (Page 155).

With slight pressure on an inserted card, you release this again from the locking mechanism in the slot.

5.4.6 Commissioning with SD card

Loading the firmware via the SD card

Use cases are:

- Changing the telecontrol protocol from "Telecontrol Server Basic" to a different protocol
- Commissioning without access to the WBM

Procedure

Requirements:

- Version 5.0 or higher is activated for the RTU
- The required new firmware file is saved on the SD card under the name "firmware.sfw".

- The RTU is in the "Factory setting" state.
- Optionally, the new desired standard configuration file "default.cfg" or "initial.cfg" can be saved on the SD card. After starting the RTU with the new firmware version, an attempt is made to enable the file automatically.

Procedure:

If the RTU is starting in the factory setting, it is checked whether a "firmware.sfw" firmware file exists on the SD card. If the file exists, the firmware version and the telecontrol protocol of the file are verified.

If one of the following conditions is met during verification, the firmware is downloaded from the SD card and enabled. The RTU is then restarted and an attempt is made to load the file "default.cfg" or "initial.cfg":

- The firmware is of a higher version.
- The firmware is of the same version but has a different telecontrol protocol.

A downgrade to an earlier firmware version, even if a different telecontrol protocol is available on the SD card, is not possible using this method.

LED patterns

The following LED pattern is set while downloading the firmware when starting:

Yellow: DC IN, BAT

Red: STATUS

For the LED pattern during the restart, refer to the section LEDs (Page 64).

5.4.7 Grounding and overvoltage protection

Ground/chassis ground concept

CAUTION

Grounding by trained specialist personnel

Have trained specialist personnel create a grounding and chassis ground concept.

Only allow trained specialist personnel to perform the ground connection on the system.

Keep to the local regulations and those that apply to the system. However it is installed, the housing of the RTU must be grounded to comply with the local electrotechnical regulations that apply in the relevant country. The most effective grounding method is a direct connection to ground with minimum resistance.

Do not ground the RTU using the grounding terminal X10.

Instead, ground the protective housing at the connector intended for this. Ground the housing with a maximum of 1 ohm resistance from the protective housing to ground. For information on grounding, refer also to the appendix Protective housing (Page 420).

Overvoltage protection

NOTICE

Protection of the RTU and the system

Via cables, leaving the RTU, the coupling in of strong electromagnetic pulses on the supply cables is possible, for example, resulting from lightning strikes.

The connectors of the RTU are not protected against strong electromagnetic pulses. For this, external overvoltage protection modules are required.

Have trained specialist personnel create and overvoltage concept that meets the electrotechnical regulations in the relevant country.

Cables at risk

The RTU is at risk via the following cables:

- The supply cables of the optional external power supply of the RTU.
- All signal cables and cables to the power supply of sensors, switches and other devices connected to the RTU.
- The antenna cable. If the antenna is installed outside the protective housing of the RTU.

Protection with overvoltage protection modules

The overvoltage protection modules listed in the appendix or technically equivalent modules, provide additional protection against overvoltage, refer to the section Overvoltage protection modules (Page 424).

5.5 Maintenance and cleaning

WARNING

Unauthorized repair of devices in explosion-proof design

Risk of explosion in hazardous areas

- Repair work may only be performed by personnel authorized by Siemens.
- For function checks, maintenance and servicing work, you need to observe the requirements on checking and maintaining plants in hazardous areas according to the standards EN / IEC 60079-17.

WARNING

Impermissible accessories and spare parts

Risk of explosion in hazardous areas

- Only use original accessories and original spare parts.
- Observe all relevant installation and safety instructions described in the manuals for the device or supplied with the accessories or spare parts.

CAUTION

Hot surfaces

Risk of burns during maintenance work on parts with a surface temperature above 70 °C (158 °F).

- Take appropriate protective measures, for example, wear protective gloves.
- Once maintenance work is complete, restore the touch protection measures.

WARNING

Cleaning the housing

- **In hazardous areas**
  Only clean the outer parts of the housing with a damp, but not wet, cloth.
- **In non-hazardous areas**
  Only clean the outer parts of the housing with a dry cloth.

Do not use any liquids or solvents.

5.6 Disassembly

WARNING

Improper disassembly

Improper disassembly may result in a risk of explosion in hazardous areas.

For proper disassembly, observe the following:

- Before starting work, ensure that the electricity is switched off.
- Secure remaining connections so that no damage can occur as a result of disassembly if the system is accidentally started up.

Configuration (WBM) 6

6.1 Range of functions of the WBM

Web Based Management (WBM)

The RTU is configured using the Web Based Management (WBM) of the RTU.

The WBM consists of integrated Web pages of the RTU that can be called up in the Web browser of a connected configuration PC.

For information on the Web browsers that can be used on the configuration PC, see section Scope of delivery, accessories, requirements (Page 51).

Overview of the functions of the WBM

With the WBM, the following functions are available to you:

User management

Via HTTP/HTTPS you connect to the RTU from a configuration PC.

In the open WBM of the RTU, you specify individual users that may access the WBM of the RTU with a user name and password.

Configuration functions

Using the WBM, configure the following functions of the RTU:

- Device-internal functions, such as the time of day or IP address
- Settings of the operating modes of the RTU
- Inputs and outputs of the sensors and actuators connected to the RTU
- Communications functions of the RTU
- Logging of system events

Programming the program blocks for the controller

In the WBM, you program the program blocks for the control tasks of the RTU using a graphic user interface.

Maintenance functions

- Loading and storing the configuration data
- Downloading new firmware versions
- Resetting the RTU to the factory settings

Diagnostics

- Viewing, reading out or saving the diagnostics messages in the diagnostics buffer
- Sending messages (SMS, e-mails) for configurable events

Saving and re-using the configuration file

The configuration data you create in the WBM is saved on the RTU.

If you want to back up the data as well, you can also save the configuration data in the WBM area. "Maintenance" on the configuration PC or on a plugged in SD card, refer to the section Configuration (Page 144).

If you install a lot of RTUs which use a lot of identical configuration data, you can copy the configuration file of one RTU, if necessary adapt it manually in a text editor and then transfer it to another RTU. You can also adapt the data later in the second RTU.

First access to the WBM

The first time you call up the WBM, you need to establish the connection between the configuration PC and RTU initially via the LAN interface of the RTU, refer to the section User data for the first login to the WBM (Page 128).

When you have configured the required data of the WAN interface, you can also access the RTU later via the mobile wireless network.

6.2 General functions of the WBM

Symbols of the title bar

The symbols in the title bar have the following significance:

Symbol	Function
2015-01-28 14:30:37	Date and time of the last page update of the WBM in the local time of the RTU (yyyy-mm-dd hh:mm:ss)
English	Drop-down list for setting the WBM language
User: 1	Name of the currently logged in user
Log out	Logout of the user
Number of active sessions: 1	Number of connections to configuration PCs
Start	Execution of the user program is turned off. Program execution is started by clicking on the text.
Stop	Execution of the user program is turned on. Program execution is stopped by clicking on the text.
	Shows that the automatic updating of the WBM user interface is enabled. The data is called up at 5 second intervals.
	Shows that the automatic updating of the WBM user interface is disabled.

Symbol	Function
Turn on	Switches on the automatic updating of the WBM. Only on pages on which no entries can be made.
Turn off	Switches off the automatic updating of the WBM. Only on pages on which no entries can be made.
Update	Updates the current display on WBM pages on which entries can be made. During the update a progress bar is visible.
?	Opens the Internet page of the RTU in the Siemens Industry Online Portal. Here, you will find all entries for the product.
	Open / save Open Source software license conditions of the RTU

Entering and saving

Confirm all your entries by clicking the "Apply" button. Your settings are then adopted by the device. With some parameters this can take a few seconds. This is visible thanks to a progress bar.

Grayed out boxes are preset by the system and cannot be changed.

Note

Data loss when changing the WBM page without saving

If you do not save your input with the "Apply" button, your input will be discarded without a prompt for confirmation when you change WBM pages.

Incorrect entries in the configuration

In many input boxes of the WBM, the content is checked for missing content or consistency when you save. Boxes with detected errors or illegal characters are marked with a red border.

192.168.0.999

Figure 6-1 Example of an input box with a detected incorrect entry

With some incorrect entries an additional message is also displayed. The settings are only applied after the error has been corrected.

6.3 Permitted characters and parameter lengths

Note

Leading and following spaces

Leading and following spaces are not permitted. These result in an error message in the WBM indicating an incorrect entry.

Exception: Comments and SMS message texts.

Use of special characters

When using special characters, the maximum character length cannot be guaranteed.

When configuring user data, passwords, device parameters etc. ASCII character sets are often specified. Below you will find ASCII character sets with their hexadecimal code and the corresponding character.

Standard characters

- **0x30 .. 0x39**
  0 1 2 3 4 5 6 7 8 9
- **0x41 .. 0x5A**
  A B C D E F G H I J KL M N O P Q R S T U V W X Y Z
- **0x61 .. 0x7A**
  a b c d e f g h i j k l m n o p q r s t u v w x y z

Special characters

- **0x20**
  Space
- **0x21 .. 0x2F**
  ! " # $ % & ' ( ) * + , - . /
- **0x3A .. 0x40**
  : ; < = > ? @
- **0x5B .. 0x60**
  [\ ] ^ _ `
- **0x7B .. 0x7E**
  { | } ~

Special characters ≥ 0x80

- **0x80, 0xA3, 0x8A, 0x9A, 0x8E, 0x9E, 0xB5**
  € £ Š š Ž ž µ
- **0xC0 .. 0xFF**
  À Á Â Ã Ä Å Æ Ç È É Ê Ë Ì Í Î Ï Ð Ñ Ò Ó Ô Õ Ö × Ø Ù Ú Û Ü Ý Þ ß à á â ã ä å æ ç è é ê ë ì í î ï ð ñ ò ó ô õ ö ÷ ø ù ú û ü ý þ ÿ

Table 6-1 **Characters and formats of the strings that can be entered in the WBM**

Parameter	String length		Permitted characters / format
	Min.	Max.	
Names (except for server names)	1	20	All the characters listed above
System			
Station name	1	20	According to the rules for DNS names with a combination of: • 0x2D .. 0x2E • 0x30 .. 0x39 (no digits alone) • 0x41 .. 0x5A • 0x61 .. 0x7A
Station description	1	20	All the characters listed above
Server names (NTP, telecontrol, mail, VPN server, FTP server)	1	63	Standard characters, period, dash (DNS name according to RFC 1035 and RFC 1123): • 0x2D • 0x2E • 0x30 .. 0x39 • 0x41 .. 0x5A • 0x61 .. 0x7A
WAN			
PIN	4	8	0x30 .. 0x39
APN	1	63	Standard characters and period (DNS name according to RFC 1035 and RFC 1123): • 0x2E • 0x30 .. 0x39 • 0x41 .. 0x5A • 0x61 .. 0x7A
APN user name APN password	0 0	63 32	• 0x21 .. 0x2F • 0x30 .. 0x3F • 0x40 .. 0x4F • 0x50 .. 0x5F • 0x60 .. 0x6F • 0x70 .. 0x7E
Users / groups			
Phone numbers	0	20	Format: +<country code><target phone number> Entry as digits and few special characters • 0x30 .. 0x39 • 0x2B Plus character: Placeholder for the trunk prefix before the country code • 0x2A asterisk at the end: Placeholder for extension numbers • 0x2F, 0x28, 0x29 / ( ) as the delimiter • 0x20 Space
Names of users and groups	1	20	All the characters listed above

Parameter	String length		Permitted characters / format
	Min.	Max.	
Company/department/position, group description	1	50	All the characters listed above
User name	1	20	• 0x2D (-) .. 0x2E (.) • 0x30 .. 0x39 • 0x40 (@) • 0x41 .. 0x5A • 0x5F (_) • 0x61 .. 0x7A
Password	8	20	• 0x30 .. 0x39 • 0x41 .. 0x5A • 0x61 .. 0x7A • 0x21 .. 0x2F • 0x3A .. 0x40 • 0x5B .. 0x60 • 0x7B .. 0x7E
E-mail address	0	95	The e-mail address has the following structure: Part1@Part2.Part3 Part 1@: Standard characters + special characters (< 0x80; only one "@" character is allowed) Part 2+3: Standard characters
Tags and program blocks			
Data point names, tag names	2	23	Standard characters + special characters (< 0x80) with the following exceptions. The following are not permitted: 0x27 ('), 0x2E (.), 0x2F (/), 0x5B ([ ), 0x5D ( ]), 0x5C (\ ), 0x7C (|)
Network names	1	20	All the characters listed above
Comments on networks and program blocks	0	64	All the characters listed above
Telecontrol			
Telecontrol password	8	29	All the characters listed above (standard characters + special characters < 0x80)
MQTT user name	1	63	All the characters listed above
MQTT password	0	255	All the characters listed above
Topic name	1	63	All the characters listed above
Messages			

Parameter	String length		Permitted characters / format
	Min.	Max.	
Message texts including up to 8 placeholders for process values with formatting instructions. The placeholders in the message are replaced by the current value.	0	160	• 0x30 .. 0x39 • 0x41 .. 0x5A • 0x61 .. 0x7E • 0x21 .. 0x2F • 0x3A .. 0x40 • 0xA • Umlauts (ä, ü etc.) and ß: 0xC4, 0xE4, 0xD6, 0xF6, 0xDC, 0xFC, 0xDF Square brackets (0x5B, 0x5D) are reserved for placeholders. The following formats are permitted for placeholders: • [V.x] Decimal value of a tag. – V is the placeholder for the tag name. "V" must be replaced in the text by the configured name of the tag. – The period and the digit following it are optional and indicate the number of decimal places. – Signal names must not contain square brackets (0x5b, 0x5D). Examples of placeholders in the message text: – The placeholder for the value of analog input AI3 with the name "Flow" without decimal places would appear as follows: [Flow] – The placeholder for the value of analog input AI4 with the name "Fill level" with one decimal place would appear as follows: [Fill level.1] • [V!w.x] Placeholder for the decimal value of a tag with formatting of the entire width by setting leading spaces or zeros. – V is the placeholder for the tag name. "V" must be replaced in the text by the configured name of the tag. – The "!w" defines that width formatting takes place. "w" must be replaced in the text by the desired total width of the tag. If leading characters are to be filled with "0", the 0 must be specified after the exclamation mark (!). – The period and the digit following it are optional and indicate the number of decimal places. Examples of placeholders in the message text: – The placeholder for the value 123.5 of analog input AI3 with the name "Flow" without decimal places, a total width of 10 and leading zeros would appear as follows: [Flow!010] [Flow!010]----->0000000124 – The placeholder for the value 123.5 of analog input AI3 with the name "Fill level" with two decimal places, a total width of 10 and with leading spaces would appear as follows: [Fill level!10.2] [Fill level!10.2]----> 123.50

Parameter	String length		Permitted characters / format
	Min.	Max.	
			– The placeholder for the value 123.5 of analog input AI3 with the name "Fill level2" with four decimal places, a total width of 15 and with leading zeros would appear as follows: [Fill level2!015.4] [Fill level!10.2]---->0000000123.5000 • [DATE] or [DATE!x] Current date. Format can be defined via optional exclamation mark followed by a number. Possible inputs for placeholders in the message text: – [DATE!10]: Current date. Format: yyyy-mm-dd – [DATE!8]: Current date. Format: yyyymmdd – [DATE!6]: Current date. Format: yymmdd • [TIME] or [TIME!x] Current time. Format can be defined via optional exclamation mark followed by a number. Possible inputs for placeholders in the message text: – [TIME!8]: Current time. Format: hh:mm:ss – [TIME!6]: Current time. Format: hhmmss • [V.T] Placeholder for a counted value that is output as a period of time. (Resolution: seconds) Format: hhhh:mm:ss • [V.T2] Placeholder for a counted value that is output as a period of time. (Resolution: hundredths of seconds) Format: hhhh:mm:ss.ss • [DEVNAME] Placeholder for own station name • [SERIALNO] Placeholder for own serial number System tags with the following predefined names (can be changed on the page "System > System tags"): • [MOB_SIG_QUAL] Signal quality of the mobile network as signal strength CSQ (outside communication mode = 0) • [MOB_CELL_ID] Cell identification (CI) of the mobile wireless interface (outside communication mode = 0) • [MOB_TX_KB] Sent data at the mobile wireless interface in KB • [MOB_RX_KB] Received data at the mobile wireless interface in KB • [BAT_RES_CHARGE]* Available remaining capacity of all connected batteries in mAh • [STATUS_COM_LAN] Status of the LAN interface of the module

Parameter	String length		Permitted characters / format
	Min.	Max.	
			TRUE: Connection is established The following conditions must be met for this purpose: – Communication mode is active. – The "Activate the LAN interface in communication mode" option was set in the configuration of the LAN interface in the WBM. – Any configured monitoring of the external router shows Router ready. An active link, e.g. in Service mode, does not meet the conditions. FALSE: Connection is not established • [STATUS_COM_MOBILE] Status of the mobile wireless interface of the module TRUE: Connection is established FALSE: Connection is not established • [STATUS_COM_WAN] Status of the mobile data connection of the module TRUE: Connection is established FALSE: Connection is not established • [STATUS_COM_VPN_1] Status of the VPN 1 interface of the module TRUE: Connection is established FALSE: Connection is not established • [STATUS_COM_VPN_2] Status of the VPN 2 interface of the module TRUE: Connection is established FALSE: Connection is not established • [STATUS_COM_TC] Status of the Telecontrol interface of the module TRUE: Connection is established FALSE: Connection is not established • [STATUS_COM_TC_REDU] Status of the redundant Telecontrol interface of the module with IEC, DNP3 or ST7 TRUE: Connection is established FALSE: Connection is not established • [STATUS_RUN] Status of program execution • [STATUS_ERROR] Status of the Status LED. If this is red, STATUS_ERROR is set. • [STATUS_NEXT_COM_CYCLE] Time of the next planned communication cycle of the RTU as UNIX time stamp If the "Always stay connected" option is enabled, the value 0 is transferred.

Parameter	String length		Permitted characters / format
	Min.	Max.	
			With the "NEVER" communication mode, the maximum value is transferred. • [STATUS_TIME_NOW] Current UTC time of the RTU as UNIX time stamp * Only from HW2
OpenVPN			
User name	0	127	No restrictions
Password	0	31	
SINEMA RC			
Password	8	63	All the characters listed above
Tag tables			
Table names	1	20	All the characters listed above
Texts in the tag tables	0	80	All the characters listed above
FW update settings			
URL (ftp://, https://)	0	255	• 0x30 .. 0x39 • 0x41 .. 0x5A • 0x61 .. 0x7A • 0x21 .. 0x2F • 0x3A .. 0x40 • 0x5B .. 0x60 • 0x7B .. 0x7E
User name	0	63	• 0x2D (-) .. 0x2E (.) • 0x30 .. 0x39 • 0x40 (@) • 0x41 .. 0x5A • 0x5F (_) • 0x61 .. 0x7A
Password	0	63	• 0x30 .. 0x39 • 0x41 .. 0x5A • 0x61 .. 0x7A • 0x21 .. 0x2F • 0x3A .. 0x40 • 0x5B .. 0x60 • 0x7B .. 0x7E

6.4 Permissible file sizes for certificate and key files

When configuring certificate-based services, only certificate and key files with a file size of up to 4096 bytes are supported.

6.5 Establishing the connection between RTU and configuration PC

6.5.1 Address data of the RTU

Address data of the RTU

To connect to the WBM of the RTU from the configuration PC, you require the address data of the RTU.

In the factory the following address data is set as default for the RTU:

Address data	Subnet mask
Default host name of the RTU	simatic.rtu
Default IP address of the RTU	192.168.0.3
Default subnet mask	255.255.255.0

6.5.2 Establishing a connection to the WBM of the RTU

Using the HTTP/HTTPS protocol

The HTTPS protocol is always activated. HTTP can be disabled in the configuration.

You can establish a connection between the configuration PC and RTU using the HTTP or HTTPS protocol:

- LAN connection
  With a local connection from the configuration PC to the RTU you can connect directly. If the RTU is in sleep mode, you need to change it to service mode by briefly pressing the button.
- Connection via WAN (Internet/mobile wireless)
  With HTTP connections via the Internet / mobile wireless network you need to use the security protocol "OpenVPN", refer to the next section.
  When no OpenVPN server exists and is configured, no HTTP connection between the PC and RTU is established via the WAN. In this case no message is output when there are unsuccessful connection attempts.
  As an alternative you can use an HTTPS connection if you enable HTTPS in the configuration and the RTU can be reached via a public IP address.

No OpenVPN is required for the connection of a service PC to the RTU via the Web server of the TCSB.

OpenVPN for HTTP connections from the configuration PC to the RTU via WAN

If you want to establish an HTTP connection to the WBM of the RTU from your configuration PC via mobile wireless, you need to use OpenVPN. This requires the following:

- A configured OpenVPN server
  - First set up an OpenVPN server.
    "SINEMA Remote Connect - Server", Is recommended, see /5/ (Page 440).
  - Configure the OpenVPN clients you require in the VPN network (configuration PC, RTUs).
- Installed OpenVPN client on the configuration PC
  - Install an open VPN client on the configuration PC.
    If you use "SINEMA Remote Connect - Server" as the server, you can use the "SINEMA Remote Connect - Client" application for the PC, see /6/ (Page 440). You will find a Getting Started for the server and client in /7/ (Page 440).
  - Before establishing the connection to the RTU, you need to connect the OpenVPN client of the PC to the OpenVPN server.
- Activated OpenVPN client on the RTU
  - Configure the OpenVPN client of the RTU, see section VPN 1 / VPN 2 (Page 177).
  - Importing certificates into the RTU
    When using "SINEMA Remote Connect server": Use the configuration alternative "SINEMA Remote Connect" on the RTU, the RTU then calls up the VPN certificates directly from the server.
    When using a standard OpenVPN server: The certificates created for the clients on the OpenVPN server must have been exported there and imported in the WBM of the RTU from the configuration PC via a LAN connection.

The VPN connection is established from the configuration PC via the VPN server to the RTU.

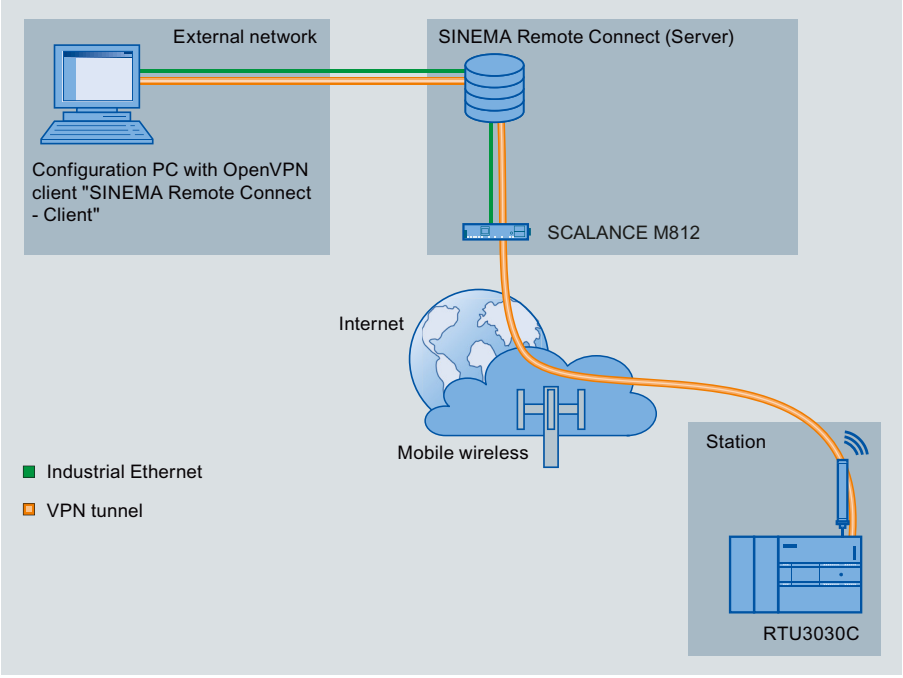

Figure 6-2 Connection between the configuration PC and RTU via WAN using OpenVPN

Preparing the PC interface

Follow the steps below to prepare the interface of the configuration PC for the connection to the RTU.

1. Open the Control Panel of the PC with the menu command "Start" > "Control Panel".
2. Click on the "Network and Sharing Center" group.
3. At the top left in the Network and Sharing Center, click on the entry "Change adapter settings".
4. Select the entry for the LAN connection and from the shortcut menu (right mouse button) select the menu command "Properties" (as administrator).
5. In the properties dialog of the LAN connection, select the entry "Internet protocol version 4 (TCP/IPv4)" in the "Network" tab.

6. Click "Properties".

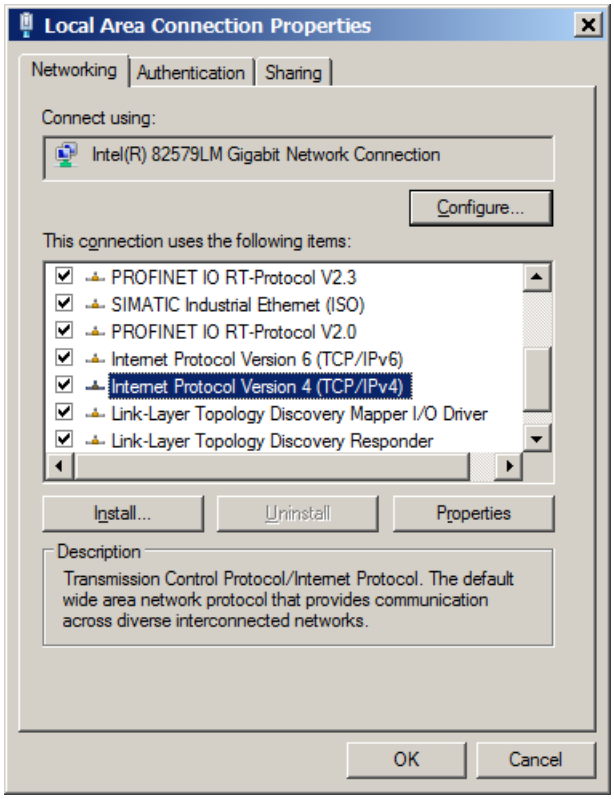

In the properties dialog that opens, the settings depend on whether you have activated the DHCP server function of the RTU, refer to section LAN (Page 158).
Make the settings according to the DHCP configuration, refer to the following sections.

7. Confirm the dialogs with "OK" and close the Control Panel.

DHCP server of the RTU enabled (default setting of the RTU in the factory)

The DHCP client function of the RTU is disabled.

1. Select the option to obtain the IP address automatically.
2. Select the option to obtain the address of the DNS server automatically to be also able to reach the RTU on the LAN interface via the host name.

This is the more convenient setting. During connection establishment, the RTU assigns an IP address to the configuration PC via the DHCP server. The RTU can then be reached on the LAN interface using the host name.

DHCP server of the RTU disabled

Requirements: On the RTU the "Specify IP address manually" option was enabled earlier.
There is no DHCP server in the local network.

1. Select the option to assign an IP address.
2. Enter the following values:
   - IP address: 192.168.0.4
   - Subnet mask: 255.255.255.0

   The address of the PC must be located in the subnet of the LAN interface of the RTU.

Establishing a connection to the RTU

1. Connect the configuration PC.
   - With a LAN connection: Connection to connector X1P1 of the turned on RTU
     Continue at point 3.
   - With a WAN connection: Connection to the router connected to the Internet
     Continue at point 2.
2. Only with WAN connection: Start the OpenVPN client and connect to the OpenVPN server.
3. Call up the Web browser on the configuration PC.
4. Enter the address (IP address or host name) in the address line of the Web browser:
   http://<Address>
   As default the following is preset for the LAN Interface:
   - IP address: 192.168.0.3
   - Host name: simatic.rtu

   When using OpenVPN, the IP address and if applicable the host name of the RTU are configured via the OpenVPN server.
   When doing this note that the IP address on the LAN interface and the IP address of the RTU in the Open VPN network must be located in different subnets.
5. Press the Enter key.
   In some situations when you log in a warning message is displayed indicating that the Web page is unsafe or that the certificate is not trustworthy. If you are sure that you have entered the correct address, ignore the message. Also add the connection to the exceptions in your Web browser (depending on the browser).

The login page of the WBM is opened.

6.6 User data for the first login to the WBM

Standard user data

In the factory the following login data is set as default.

Note

With the following user data you can log in the first time to the WBM.

User data	Default values set in the factory
User name	admin
Password	admin

Note

Changing standard user data

For security reasons, the factory set default password of the standard user must be changed when you log in the first time.

For security reasons, it is recommended that you create another user after the first login. You will find the description in the section User (Page 186).

Loss of changed standard user data

Note changed or newly assigned user names and passwords.

If you change user data of the standard user, lose the changed user data and have not created a second user, you no longer have access to the WBM of the RTU. In this case, you can only access the WBM of the RTU after resetting to the factory settings. When you reset the configuration data is lost.

6.7 Logging in

Logging in

After establishing a connection between the configuration PC and the RTU, the WBM opens with the page for the user to log in.

Enter the user name and the password.

Note

User data

When you log in the first time note to the information in the section User data for the first login to the WBM (Page 128).

You will find instructions on changing user data and on the loss of access data (user name, password) in section User (Page 186).

After clicking the "Log in" button the start page of the WBM is opened.

Note

Max. 2 connections to the WBM

If two connections are established to the WBM, note that changes cannot be made at the same time on both connections.

6.8 Start page

6.8.1 Overview

Overview

After logging in to the WBM, the start page appears.

In the title bar of the Browser tab, the station name of the RTU is displayed that you configure in "System".

In the title bar of the window apart from the user name (left) and the general buttons for the WBM (right) you will find the following information:

- Next communication cycle (configured / assigned)
  - Configured communication cycle (interface)
    The next communication cycle specified in the WBM configuration, see section Operating modes (Page 192), and in brackets the activated interface.
  - Assigned communication cycle (interface)
    The next communication cycle assigned by a TeleService SMS message, see section Wake-up call / wake-up SMS (Page 42), and in brackets the activated interface.
- Next SMS check in sleep mode
  See section Operating modes (Page 192) for information on this.

On the left there is the navigation area with the main levels of the WBM.

At the bottom right there are the tabs "Overview" and "Status". Change to the various tabs by clicking the tab name.

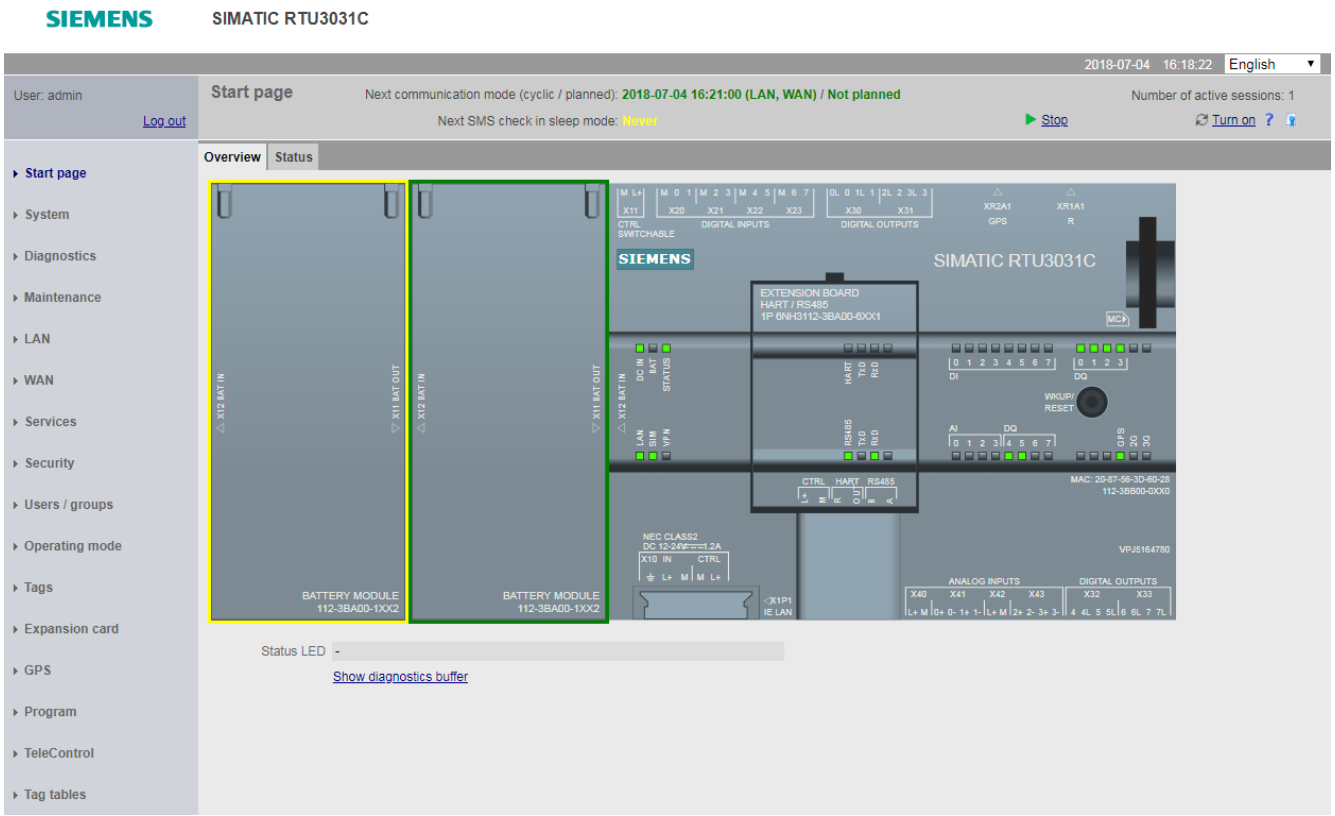

The "Overview" tab

The "Overview" tab shows a picture of the RTU. When you are connected to the operating RTU, the LED symbols shown in the WBM reflect the original status of the LEDs on the RTU.

If the extension board is activated, it is also displayed. The LEDs of the extension board have the following meaning on the start page:

- When HART or Modbus is enabled, the respective HART or RS485 LED "TxD" flashes green if at least one variable is configured and read in.
- When HART or Modbus is enabled, the respective HART or RS485 LED "RxD" flashes green if at least one variable is configured and read in. If an error occurs while reading a variable, the LED remains off.
- If HART and Modbus are activated and a communication error occurs with HART, the "RxD" and "TxD" LEDs alternatingly flash for RS485 and only the "TxD" LED flashes for HART.

Status LED

- If an error occurs (the "STATUS" LED is lit or flashes red) a message text is output in this line.

Show diagnostics buffer

- You can jump directly to the page of the diagnostics buffer via the link and check the diagnostics messages.

Navigation in the WBM

By clicking on an entry in the navigation area on the left open the WBM page you want for further information or on which you want to configure or program.

The WBM opens the first tab of the entry.

6.8.2 Status

The tab provides an overview of important status data of the RTU. Some of the display parameters are commented on below.

Note on navigation:
By clicking on the titles (bold and underlined) of the parameter groups you jump directly to the relevant WBM page.

General

Information on the device and the configuration data of the station

- Program execution
  Runtime status of the program (controller)
- Station name
  The station name configured in "System" > "General".
- System runtime (dd:hh:mm:ss)
  Runtime of the RTU since commissioning or since the last restart

Power supply

Information about the battery module being used or about the external power supply

- Day of the last battery change
  Time of the last changeover of the battery currently being used (when one battery module is empty and there was a changeover to the other one).
- Remaining capacity (as of HW2)
  Remaining capacity of all available batteries in mAh.

Ethernet interface

Information on the LAN interface

Logging

Information on logging and the SD card

Extension board

Information on the status of the extension board

Mobile wireless interface

Information on the configuration data and the current status of the mobile wireless interface

- Connected since (dd:hh:mm:ss)
  Time since last booking into the mobile wireless network.
- Data connection since (dd:hh:mm:ss)
  The time since the connection to the data service of the mobile wireless network.

VPN 1 and VPN 2 connection

Information on the configuration data and the connection status of the OpenVPN configuration

When the VPN connections are not configured, the default server name is displayed here.

Telecontrol status or connection status to the broker when using MQTT

Information about the communication configuration. "Protocol type" shows the communication protocol being used.

GPS (RTU30x1C)

GPS status and position

6.9 System

6.9.1 General

Note the characters permitted for the input boxes, see section Permitted characters and parameter lengths (Page 116).

- **Station name**
  Assign the station name of the RTU.
  The station name of the RTU provides structural information within your system.

  Note

  Host name (DNS)

  The station name is used as the RTU host name for DNS servers.

  You configure the protocol-specific addressing data in the "TeleControl" tab.
- **Station description**
  Optional: Enter a free description of the station (max. 20 characters).

Location

Enter the latitude and longitude of the RTU location as degrees. The entry is made in decimal degrees.

- **Latitude**
  Value range: -90.000000 .. 90.000000
  Positive values for north, negative values for south
- **Longitude**
  Value range: -180.000000 .. 180.000000
  Positive values for east, negative values for west

6.9.2 Device info

Hardware

- System runtime (dd:hh:mm:ss)
  Time since the RTU last started up
- Article number
  Article number of the device
- Serial number
  Serial number of the device
- Hardware product version
  Hardware product version of the device
- Production date
- Copyright entry
- Module security
- Lowest measured internal temperature (°C)
- Highest measured internal temperature (°C)

Bootstrap

- Bootstrap version
  Current version of the bootstrap code
- Checksum*

Firmware

- Activated firmware version
  Current firmware version of the device
- Activated on
  Date when the firmware was activated
- Mobile wireless module version
- Modem software version
- Checksum*
  Checksum for the current firmware version

Configuration

- Station name
  Name of the station
- Checksum
  Checksum for the current configuration of the RTU

* No checksum is displayed for modules of hardware product version 1.

6.9.3 SD card

SD card

Displayed data

- **SD card inserted**
- **Total free memory space (kB)**
  Here the free (still available) and the entire memory on the SD card that can be used by the user are displayed.
  If the free space on the SD card is used up, on the page "Operating mode" > "Logging" you can make the setting as to whether the oldest process data is overwritten by new data (FIFO principle) or the logging is stopped.

Notifications

- **Notifications**
  Here you specify whether the events that can be configured later cause a message (SMS message or e-mail) to be sent or not.
- **Change immediately to communication mode**
  If the option is enabled if one of the events configured later occurs, the RTU changes to communication mode and sends the message.
  If the option is disabled, the RTU sends the message only the next time a mobile wireless connection is established.
- **Recipient group**
  Here, enter the recipient group for the message. You configure recipient groups on the WBM page "Recipient / Groups".
- **Notify when free memory space falls below the limit.**
  Here you specify whether a message is sent when a value falls below a configurable limit value (next parameter). The check for free memory space only takes place when logging is enabled and for at least one tag.
- **Limit value (KB)**
  If the value falls below the limit value, the RTU sends a message if the option above was enabled.
- **Subject and text**
  Here, you enter the text and subject of the message. You configure the texts on the WBM page "Tags" > "Texts".

- **Notify when the SD card is full**
  Here you specify whether a message is sent if there is no longer any free on the SD card. The check for free memory space only takes place when logging is enabled and at least one tag has been logged.
- **Text**
  Here, you enter the configured text of the message. You configure the texts on the WBM page "Tags" > "Texts".

Loading files

- **Load new file**
  After selecting a file stored on the configuration PC using the "Search" button, the file name is displayed here.
- **Search**
  Searches the file system of the configuration PC for a file saved there that is intended to be saved on the SD card.
- **Save on SD card**
  By clicking the button, you download the selected file to the SD card.
  Successful loading is displayed.

Savable files below the parameter area

Below the parameter area, the names of the files saved on the SD card are displayed. By clicking on the file name, you can save the file from the SD card to the file system of your PC.

Naming conventions for the file names

Files that were written to the SD card from the RTU, meet the DOS format:
<1...25 characters>.<1...3 characters>

The file names are structured according to the following scheme:

- **Configuration files**
  Files with configuration data of the RTU:
  *.CFG
  - The file "default.cfg" is created automatically by the RTU and updated with every change to the configuration.
  - The file "user.cfg" is a file created manually by users ("Maintenance" > "Configuration").
- **Log files**
  Files of the RTU with process data
  - Files created daily:
    <XXXXXXXXXXXXXXXXXXXX><yy><ddd>.LOG
  - Files created weekly:
    <XXXXXXXXXXXXXXXXXXXX><yy>w<ww>.LOG
  - Files created monthly:
    <XXXXXXXXXXXXXXXXXXXX><yy>m<mm>.LOG

  The components have the following meaning:
  - <XXXXXXXXXXXXXXXXXXXX>: Prefix of the file name that is configured on the WBM page "Operating mode" > "Logging".
  - <yy>: Placeholder for the year (the two last places of the year)
  - <ddd>: Placeholder for the day in the year (1...365)
  - w: Identifier for weekly log files
  - <ww>: Placeholder for the week in the year (1...52)
  - m: Identifier for monthly log files
  - <mm>: Placeholder for the month in the year (1...12)
- **Diagnostics buffer file**
  File with the diagnostics buffer entries of the RTU:
  diagbuf.txt
- **Other files**
  Files that you yourself save on the SD card:
  .

6.9.4 System time

Buffering of the time

The internal RTU clock is maintenance free and buffered by a capacitor, to be able to bridge the duration of a battery change. With this, the simultaneous failure of the battery module and the external power supply can be bridged for 3 hours (at room temperature).

System time

In this tab, you configure the time and time-of-day synchronization of the RTU.

Note

Time-of-day synchronization

With applications that require time-of-day synchronization, you should synchronize the time of day of the RTU. If you do not synchronize the time of day of the RTU regularly, there may be deviations of several seconds a day between the time of day of the RTU and the time-of-day of the master station or cloud.

Note

Year dates ≥ 2000

The RTU only accepts year dates ≥ 2000.

Note

Settings with the ST7 and IEC protocols

If you use a partner with daylight saving time changeover, you should select the following settings for the RTU:

- Specify a time zone.
- Do not enable the "Automatic daylight saving time switch" option.

As the synchronization method, the option "By telecontrol master station" is the default.

The RTU then adopts the time of day from the partner. The partner calculates the time offset of the daylight saving time from the time stamps of the data frames received from the RTU.

Local time zone

- **Time Zone**
  Set the time zone in which the RTU is located either by entering it manually or selecting an entry from the drop-down list.
- **Automatic daylight saving time switch**
  If you sent the time zone manually, you can enable the automatic changeover of daylight saving time and standard time and set the parameters for this.
- **Enable time-of-day synchronization**
  By enabling the option, you enable synchronization of the RTU time of day.
  The time of day is synchronized each time the RTU changes to communication mode.
  As an option, at the bottom of this WBM page you can set the time of day of the RTU manually or adopt it from the configuration PC.

Time-of-day synchronization

- **Active**
  Enable the option if the time of day of the RTU is to be synchronized.
- **Synchronization method**
  You can enable synchronization of the RTU time of day according to one of the following methods:
  - **NTP**
    The RTU supports the SNTP (Simple Network Time Protocol) method.
    If you want to use this option, make sure that the specified NTP server can be reached via the relevant interface.
    The time-of-day synchronization method SNTP with which you access a time-of-day server in the network can also be used with OpenVPN.
  - **GPS (RTU30x1C)**
    The RTU30x1C can receive the highly precise time via GPS satellites.
  - **By mobile wireless network**
    The RTU adopts the time of day from the mobile wireless network.
    The RTU supports the NITZ (Network Identity and Time Zone) service on the wireless interface. Check with your network provider to find out whether this function is supported in your mobile wireless network.
  - **By telecontrol master station**
    The RTU adopts the time of day from the communication partner (telecontrol server or master).

NTP settings

- **Interface**
  Select the interface via which the RTU will be synchronized.
- **IP address or DNS name of the NTP server**
  Assign the address of the NTP server.
- **Accept time of day from non-synchronized NTP servers**
  If the option is enabled, the RTU also accepts the time-of-day from non-synchronized NTP servers with stratum ≥ 15.
  If the option is disabled, the time of day of the RTU is not set by NTP servers with stratum ≥ 15. In this case the RTU uses the last accepted time of day.

Diagnostics messages

- **Check time-of-day synchronization**
  If synchronization is via the mobile wireless network the option cannot be activated.
  If this option is enabled, the RTU checks whether its time of day has been set according to the settings made.
  - If the time of day was set, the RTU enters a diagnostics message of the class. "INFO" in the diagnostics buffer.
  - If the time of day could not be set, the RTU enters a diagnostics message of the class. "ERROR" in the diagnostics buffer.

  The diagnostics messages are entered incoming/outgoing; in other words, only the last message is entered in the diagnostics buffer.
- **Reduction factor for communication cycle**
  By selecting an entry from the drop-down list, you specify the reduction factor for the cycle in which the RTU checks the time of day synchronization.
  The basis for the checking cycle is the basic cycle of the communication mode that you configure on the WBM page "Operating mode".
  If you select a reduction factor of 1, the acceptance of the time of day is checked with each change to the communication mode.
  If you select a higher reduction factor, the cycle is increased according to the displayed value.

Set system time manually

Select one of these options if you want or need to reduce communication via mobile wireless.

The system time set here is kept by the internal clock of the RTU. For information on the accuracy, see section Technical specifications (Page 383).

- **New system time**
  Here, enter the current time of day manually.
  When making your entry, keep to the specified format.
  Month, day, and hour can also be entered as single digits. Example: March is accepted as "03" or as "3".
  If you click the "Apply new time of day" button the RTU adopts the entered time of day.
- **Adopt PC time**
  If you click the "Adopt PC time" button the RTU adopts the time of day from the configuration PC.

Time-of-day format and time stamps

System time of the RTU

The RTU keeps its time-of-day as UTC. The time of day and includes the time difference since 01.01.1970 in milliseconds.

The RTU can calculate the local time via the information on local time in the "System time" tab and use it, for example, for the messages from the diagnostics buffer and in the WBM.

Time stamp of the data frames

If the communication services are activated, the time stamps of the data frames are transferred depending on the protocol being used:

- **TeleControl Basic**
  Transfer of the time stamps in UTC format (48 bits)
- **ST7**
  Refer to the information on time stamps in the manual of the communication partner. In the configuration, the transfer of either the local time or UTC time can be set.
- **DNP3**
  Transfer of the time stamps in UTC format (48 bits)
- **IEC 60870-5**
  Transfer of the time stamps in the "CP56Time2a" format. In the configuration, the transfer of either the local time or UTC time can be set.
  Keep to the recommended settings in the note above.

6.9.5 System tags

Tags

On this page, you can enable the system tags of the RTU, change the name and configure the logging of these tags.

Active

Only enabled tags can be logged and used in the user program and transferred via TeleControl.

Type

Meaning of the system tags

Name

Enter the preset system name or assign a new name.

Current value

Display of the value of the tag

Format

With counters:

- **Unit**
- **Format**

With binary inputs:

- **Text for ON**
- **Text for OFF**

Logging

In the "Logging" parameter group, you specify whether and when the process data of the tag is stored on the SD card.

- **Logging**
  Options:
  - OFF
    The process data is never saved to the SD card
  - Always
    The process data is saved with each update cycle and every time the signal changes
  - On change
    Process data is saved only when the signal changes
  - In the basic cycle
    The process data is saved in every basic cycle

Apply
Confirm all your entries by clicking the "Apply" button.

6.10 Diagnostics

6.10.1 Diagnostics buffer

Diagnostics buffer

The diagnostics buffer receives diagnostics messages for internal events and errors. It can hold a maximum of 200 entries. When the maximum number is exceeded, the oldest entries are overwritten.

The entries in the diagnostics buffer contain a consecutive number, a classification, a time stamp in local time and the message text.

Below you will find several examples of events that are entered in the diagnostics buffer:

- RTU startup
- Change to the configuration
- Establishment/abort of the communications connection
- Time-of-day synchronization
- Power failure

The diagnostics messages are classified as follows:

- INFO
  Information about a special event
- WARNING
  Warning of a possibly unwanted event

- ERROR
  Error. The RTU continues to run.
- FATAL
  Serious error that impairs or interrupts the operation of the RTU.

Copy of the diagnostics buffer

You have the following options for saving the entire diagnostics buffer:

- **Save on SD card**
  Manual saving on the SD card
- **Save to PC**
  Manual saving in the file system of the configuration PC

Error identifiers for the transfer of e-mails and FTP files

You will find possible error identifiers for transfer errors that can be included in the diagnostics buffer entries in the section Error detections for Telecontrol, e-mails and FTP (Page 375).

6.10.2 Configuration

Save a copy of the diagnostics buffer automatically on SD card if serious errors occur

By activating the option, you can ensure that if errors of the class FATAL occur, the diagnostics buffer is automatically backed up on the SD card.

Messages

- **Send notifications**
  Here, you set whether the RTU sends a notification by SMS message or e-mail if an event (message) occurs.
  The plain text of the message is sent in English.
- **Message class**
  Here, you set the message class.
- **Change immediately to communication mode**
  If you select the option, the RTU changes immediately to communication mode as soon as an event triggers the sending of the notification.
- **Recipient group**
  Here you specify configured groups as recipients of the notification in "Users / groups".

Only when sending e-mails:

- **Attachment**
  Here, select the attachment that will be sent with the e-mail.
- **Attachment zipped**
  If you enable the option, the attachment is sent compressed as a ZIP archive.

For information on encryption and decryption of archives sent as an attachment, see section E-mail (Page 171).

6.11 Maintenance

6.11.1 Configuration

In this tab you can save the configuration data of the RTU in a configuration file and load it again.

Configuration files have the file format *.cfg.

Note

RTU3010C, RTU3030C, RTU3031C, RTU3041C and RTU3051C configurations upward compatible as of V5.2

As of firmware version V5.2, you can load .cfg files from firmware version V2.0 and higher into the different RTU variants. Example: The .cfg file of a RTU3030C with firmware version 5.1 can be loaded into a RTU3041C with firmware version 5.2.

Loading the configuration is rejected if it contains elements that are not supported by the target device. Example: The .cfg file of an RTU3041C with GPS enabled can only be loaded into an RTU3031C and not into an RTU3030C.

Older .cfg files of released versions from 2.0 can be loaded into the current firmware of the individual RTU types.

Configuration

Note

Verifying the checksum

As of firmware version V6.0, the checksum of the configuration is checked when a configuration file is imported. Configurations that were created prior to firmware version V5.2 do not have a checksum. Only configuration files with the same version as the RTU are checked.

If no checksum or a deviating checksum is determined, select whether the configuration should be loaded into the RTU or not.

Every change in the configuration file results in a deviating checksum.

Load configuration

With this function a configuration file created previously and saved on the PC is loaded on the RTU.

- **File**
  After selecting a configuration file stored on the configuration PC using the "Search" button, the file name is displayed here.
- **Browse**
  Searches the file system of the configuration PC for a configuration file saved there that is intended to be loaded on the RTU.

- **Load on device**
  Loads the configuration file shown under "File" on the RTU.

  Note

  On completion of loading, the configuration data of the loaded configuration file is used immediately by the RTU.

- **Load from SD card**
  Loads the configuration file located on the SD card on the RTU.

  Note

  On completion of loading, the configuration data of the loaded configuration file is used immediately by the RTU.

  Note the behavior of the RTU when there are several configuration files on the SD card, refer to the section "Startup of the RTU with configuration files".

Save configuration

With this function the current configuration data of the RTU is saved in a configuration file.

- **Save on SD card**
  Saves the current configuration file under the name "user.cfg" on the SD card.
- **Compress and encrypt file (optional)**
  If you enable the option, the configuration file is saved and encrypted compressed as a ZIP archive.
- **Password for optional encryption**
  Input box for the password for encryption of the configuration file
  The following requirements apply to the password to be entered:
  - Length: At least 1 character, maximum 16 characters
  - Permitted characters
    Digits, lowercase letters, uppercase letters and special characters from the ASCII character set 0x20 .. 0x7e
    See also section Permitted characters and parameter lengths (Page 116).
  - Required characters: Free combination of the permitted characters
- **Save to PC**
  Saves the current configuration file under the name "user.cfg" on the configuration PC.

Names of the configuration files

You can save different configuration files on the SD card.

Automatic saving in the configuration file "default.cfg"

When using an SD card if the configuration data of the RTU is automatically stored in the file "default.cfg".

When changed configuration data is adopted the file "default.cfg" is automatically updated on the SD card. To extend the service life of the SD card, the file is updated with a delay of 60 seconds.

Manual saving in the configuration file "user.cfg"

When you save manually using the WBM, the configuration data is stored on the SD card in a file with the default name "user.cfg".

Manual creation of the "initial.cfg" configuration file

For the initial configuration of an RTU, you can edit a configuration file saved on the PC with a text editor without encryption. Save this configuration file on an SD card under the name "initial.cfg" so that it can be used by the RTU.

Startup of the RTU with configuration files

If you store different configuration files on an SD card with valid internal configuration and plug this into an RTU, the RTU always runs with the internal configuration data.

If an SD card with the file "default.cfg" or "initial.cfg" is inserted in a brand-new RTU or an RTU reset to the factory settings, the RTU always starts with the file "default.cfg" or "initial.cfg", if this file contains a consistent configuration valid for the RTU type.

Note

Configuration file "default.cfg" is prioritized

If "default.cfg" and "inital.cfg" are both present on an SD card, the "default.cfg" is read in first and the "initial.cfg" is not used.

Editing configuration files

You can edit and change a configuration file saved on the PC with a text editor.

Make sure that you make the changes consistently. Do not change any data if you are not sure that it does not contradict settings at another location. Example: Enabled e-mail and FTP transmission via the mobile wireless interface and disabling of the "Enable data service in the mobile wireless network" function is inconsistent.

Inconsistent configuration files are rejected by the RTU.

Note

No editing of encrypted entries

Encrypted entries of a configuration file such as passwords or the OpenVPN key must not be changed.

If encrypted parts are changed, the RTU rejects the configuration file when you try to load it. The "initial.cfg" configuration file is an exception.

Note

Editing configurations with a text editor

When editing a configuration file with a text editor, make sure that you do not use any special characters but only characters of the following ASCII character sets:

- 0x30 .. 0x39 (0 .. 9)
- 0x41 .. 0x5A (A .. Z)
- 0x61 .. 0x7A (a .. z)
  See also section Permitted characters and parameter lengths (Page 116).

If you use special characters you need to save the file in the UTF-8 format.

Create bulk "initial.cfg" configuration file

For the initial commissioning of one or more RTU modules, you can create an "initial.cfg" configuration file based on an existing configuration file.

Differences between the "initial.cfg" and "default.cfg" configuration file

- Passwords are entered as unencrypted plain text
- Fingerprints from SINEMA Remote Connect (SRC) are entered as a hex column, as shown in the SRC. Separators between the individual bytes are optional and can consist of colons or spaces.
- Certificates and keys are stored as unencrypted PEM files on the SD card or are written to the configuration file as unencrypted plain text.

Creating the "initial.cfg" configuration file

1. Use an existing "default.cfg" configuration file with a functional configuration as a basis.
2. Save the configuration file under the name "initial.cfg" on your PC.

3. Open the "initial.cfg" with a text editor and make the following changes:
   - Delete the line with the checksum ("Checksum").
   - Edit all lines in which a password ("Password") is entered and enter new passwords in plain text.
   - Edit all entries for certificates and keys. Enter the file name under which you save the corresponding key files and certificate files on the SD card after "Name-cert:", "Name-key:" and "Name-ca:".
     Example:
     ```
     Name-cert: Example.crt
     Name-key: Example.key
     Name-ca: Example.ca
     ```
     The Example.crt, Example.key and Example.ca files must be on the SD card.
     Alternatively, you can also copy the content of the PEM files directly to the configuration file, see section "Writing certificates and keys in the "initial.cfg"".
   - If SRC is not used, delete the content after the "ConfiguredFingerprint:" entry.
   - When using SRC, replace the content of "ConfiguredFingerprint:" with the hex column from the SRC.
   - Fully delete the lines with the entries "CurrentFingerprintType:", "CurrentFingerprint:" and "FallbackFingerprint:".
4. Save and close the "initial.cfg".

Writing certificates and keys in the "initial.cfg"

You can also copy the content of the PEM files directly into the configuration file. Follow the steps outlined below:

- Enter the desired file name under which the file is to be displayed in the WBM after "Name-cert:", "Name-key:" and "Name-ca:". The file name must not contain a file extension or a dot ".", otherwise the RTU expects a PEM file on the SD card.
- In the line below, write "Cert:", "Key:" or "CA:" followed by the YAML formatting instruction "|-" (pipe and minus).
- Copy the complete content of the PEM file into the following lines. The inserted lines with the contents of the PEM files must be indented by two additional spaces.
  Example:
  ```
  Name-ca: Example
  Ca: |-
    -----BEGIN CERTIFICATE-----
    MIIDjjCCAnagAwIBAgIQA
    pLiaWN0bfVKfjllDiIGkn
    MrY=
    -----END CERTIFICATE-----
  ```

Use bulk "initial.cfg" configuration file

1. Copy the "initial.cfg" and all associated certificate files and key files to an SD card.
2. Ensure that there is no "default.cfg" on the SD card.
   If "default.cfg" and "inital.cfg" are both present on the SD card, the "default.cfg" is read in first and the "initial.cfg" is not used.
3. Insert the SD card into the RTU (and set the RTU to RTF mode)
   When the RTU is started, the "initial.cfg" is read from the SD card. After successful reading, the configuration for the RTU is adopted and saved as "default.cfg" with encrypted entries on the SD card.
   If errors occur when reading in the configuration file (e.g. password rules violated), a diagnostics buffer entry with line number "in or before line x" is created. The RTU retains the factory settings.

Note

Replace SD card with "initial.cfg" and "secure delete"

For security reasons, you should remove the SD card after the initial configuration and "secure delete" it on a PC using suitable means, as simply deleting the "initial.cfg" configuration file, the unencrypted entries are not completely deleted and could be restored.

If an "initial.cfg" is still found on the SD card when the RTU is started again, a warning appears in the diagnostics buffer.

6.11.2 Firmware

Important version data of the currently used firmware is displayed on this page.

If a new firmware version is available, you can load the firmware file from the configuration PC or the inserted SD card into the RTU via this WBM page.

Alternatively, you can enable the cyclic firmware check. The RTU then checks cyclically whether new firmware is available. If yes, you receive notice and the firmware is loaded and activated automatically depending on the setting. The version data of the new firmware is displayed after activation.

Note

Digitally signed and encrypted firmware prevents manipulation by third parties

To be able to check the authenticity of the firmware, the firmware is digitally signed by Siemens. This allows manipulation by third parties to be detected and prevented.

The encryption of the firmware is intended to prevent re-engineering.

Status

The following information is shown:

- Station name
  Station name that you assigned on the "System" Web page.
- Activated firmware version

- Activated on
  The activation date of the firmware
- Bootstrap version
  The bootstrap version of the firmware
- IfMobile wireless module version
  The version of the mobile wireless module of the RTU
- Modem software version (RTU3041C / RTU3051C)
  Version of the certification-relevant modem software

Manual update

If a new firmware version is available for the RTU, you will find this on the Internet pages of Siemens Industry Online Support:

Link: (https://support.industry.siemens.com/cs/ww/en/ps/21767/dl)

Firmware files have the file format *.sfw.

The firmware files for RTU3030C, RTU3031C or RTU3041C have the format RTU1123BB00_XXXX.SFW.

The firmware files for RTU3051C have the format RTU1125BB00_XXXX.SFW and cannot be loaded into the other RTU devices.

Download the firmware file to the file system of your configuration PC.

- **File**
  After selecting a firmware file stored on the configuration PC using the "Browse" button, the file name is displayed here.
- **Browse**
  Searches the file system of the configuration PC for a firmware file saved there that is intended to be loaded on the RTU.
- **Load on device**
  By clicking the button, download the selected firmware file to the RTU.
- **Load from SD card**
  By clicking the button, you download the firmware file "firmware.sfw" from the SD card to the RTU.
- **Available firmware**
  If newer firmware is found during the check, the version and date of the newer firmware is displayed.
- **Variants**

  Note

  Resetting to factory settings

  When the firmware version changes, the RTU is reset to factory defaults. If the RTU is operated in communication mode via WAN or VPN, the RTU is no longer accessible via this path as a result.

  Display of all firmware variants found on the provisioning server.
  Load and activate the desired firmware variant via the buttons.

- **Check now**
  Requirements: The option is only enabled if the "Cyclic check for new firmware" option is enabled on the "FW update settings" page.
  Checks if new firmware is available. If the RTU is not yet in communication mode, the mode is started automatically.
- **Load on device**
  Load the firmware displayed during the check under "Available firmware" with the selected variant into the RTU.
  The process may take several minutes. The result is displayed under "Firmware status".

Following the download the firmware is not yet used. The following properties of the new firmware file are displayed:

- **Firmware status**
  Shows whether the firmware file was downloaded free of errors or with errors.
- **Signature status**
  Shows the result of the signature check.
- **Description**
  Shows a brief description of the firmware file.
- **Version**
  Version of the loaded firmware file

If you do not want to use the loaded firmware file, you can remove this again with the "Delete" button.

- **Activate and restart**
  If you want to use the downloaded firmware file, click the "Activate and restart" button. Note that updating the firmware can take a while.

  Note

  No configuration during activation

  During activation until the RTU restarts, the WBM is not locked.

  Do not make any settings during this time. It is not possible to establish whether settings are correctly adopted during this time.

  Note

  Do not switch off the RTU / pull the SD card

  Do not switch off the RTU or pull the SD card during the firmware activation process. This avoids the occurrence of inconsistent statuses.

  Note

  Restarting the RTU

  When the new firmware is activated, the RTU runs a restart. You can recognizes the current status based on the LED picture, see section LEDs (Page 64).

- **Delete**
  Deletes a loaded and not yet activated firmware file from the RTU.

Firmware update for RTU3030C with hardware product version 1

If you want to upgrade a RTU3030C with hardware product version 1 to firmware version 3.0, you must install firmware version 12.00.028 for the mobile wireless module. To do this, either copy the provided firmware file "engine.sfw" of the mobile wireless module onto the SD card manually or via the WBM. Then perform the firmware update for the RTU3030C. The RTU cannot be updated from V2 to V3 without the "engine.sfw" file on the SD card.

The RTU firmware is then updated to V3.0 and the current firmware version 12.00.028 is automatically installed for the mobile wireless module. After successful installation, the RTU restarts and is ready for operation.

Note the following when updating:

- Updating the mobile wireless module firmware after activating and then restarting the module can take up to 10 minutes.
- Do not switch off the module during this time. Wait until the operation is complete and the module restarts. Please observe the status of the LEDs during the firmware update, see section LEDs (Page 64).
- If the power supply fails during the update, the process must be repeated.
- Make sure that the SD card with the firmware file "engine.sfw" remains inserted in the RTU until the process is completed.

6.11.3 FW update settings

Settings for firmware update

You make settings for firmware update on this page.

- **Cyclic check for new firmware**
  Requirements: "Cyclic" or "Always connected" is set as communication mode on the WBM page "Operating mode".
  If activated, the check for newer firmware is performed in the communication mode.
  The cyclic check is not made for alarm-controlled communication cycles, e.g. if the "Send immediately" option is activated for blocks for messages or if telecontrol events are sent immediately.
- **Reduction factor for communication cycle**
  By selecting an entry from the drop-down list, you specify the reduction factor for the cycle in which the RTU checks the time of day synchronization.
  The basis for the checking cycle is the basic cycle of the communication mode that you configure on the WBM page "Operating mode".
  If a reduction factor of 1 is selected, the system checks for new firmware with each change to the communication mode.
  If you select a higher reduction factor, the cycle is increased according to the displayed value.

- **Action with newer firmware**
  Select the action to be performed by the RTU when a new firmware version is available on the provisioning server:
  - **Message in diagnostics buffer and send notification**
    The RTU enters a diagnostics message of the "INFO" class in the diagnostics buffer and (optionally) sends a message (SMS or e-mail) to the selected recipient group using the settings that can be configured below.
  - **Load and send notification**
    The RTU enters a diagnostics message of the "INFO" class into the diagnostics buffer and loads the firmware found.
    Optional: The RTU sends a message (SMS or e-mail) with the following configurable settings to the selected recipient group.
    The loaded firmware is not activated automatically. Activate the loaded firmware on the "Firmware" page manually with the "Activate and restart" button.
  - **Load and activate immediately**
    The loaded firmware is activated immediately and the RTU is restarted.
  - **Load and activate at specified time**
    The loaded firmware is automatically activated at the specified activation time and the RTU is restarted.
- **Activation time**
  Only if the "Load and activate at the specified time" option is selected
  Enter the time at which the loaded firmware is activated and the RTU is restarted. The functions of the RTU are not available for several minutes during this period. If a newer firmware is loaded and verified after the time specified here, the activation time is automatically shifted to the same time on the following day.

- **Deployment through**
  Select one of the following deployment variants:
  - **SINEMA Remote Connect**
    Requirements: a connection to a SINEMA Remote Connect Server is configured. Refer to section VPN 1 / VPN 2 (Page 177) for more on this.
  - **Web Server**
    A web server administered by users themselves, which can be reached via the settings configurable in the following and which provides the firmware files under the specified URL.
  - **FTP server**
    An FTP server administered by users themselves, which can be reached via the settings configurable in the following and which provides the firmware files under the specified URL.
  - **Interface**
    Select the interface via which the RTU is to perform the cyclic check for newer firmware. If the provisioning is made by SINEMA Remote Connect, select "VPN 1" or "VPN 2" depending on which of the two servers the firmware is provided on.

  For the variants "Web Server" and "FTP Server":
  The name of the firmware file must correspond to the following scheme for RTU3030C, RTU3031C and RTU3041C: "RTU1123BB00_XXXX.sfw"
  The name of the firmware file must correspond to the following scheme for RTU3051C: "RTU1125BB00_XXXX.sfw"
  XXXX is a placeholder for:
  - MQTT: Firmware variant with support of the MQTT Cloud protocol
  - DNP3: Firmware variant with support of the telecontrol protocol DNP3
  - I870: Firmware variant with support of the telecontrol protocol IEC 60870-5-104
  - ST7: Firmware variant with support of the telecontrol protocol ST7
  - WDCP: Firmware variant with support of the telecontrol protocol TeleControl Basic
- **URL**
  Path to the available firmware.
- **User name**
  User name to log in to the employed provisioning server of the firmware.
- **Password**
  Password to log in to the employed provisioning server of the firmware.

CA certificate

The root certificate of the provisioning server of the firmware is used for authentication to the RTU. The certificate is mandatory for a firmware update via Web server / FTP server.

- **Currently used file**
  Display of the file name of the currently used certificate file.
- **Delete**
  With the button, you delete the currently used file.
  The file is deleted only after you click the "Apply" button.

- **File used after applying**
  After loading the certificate, the name of the loaded file is displayed here.
- **Load new file**
  After selecting a file stored on the configuration PC using the "Search" button, the file name is displayed here.
- **Browse**
  Searches the file system of the configuration PC for a saved certificate file that is intended to be loaded on the RTU.
- **Load on device**
  Use the button to load the selected file into the RTU.

Notifications

- **Notifications**
  You use the drop-down list to select whether or not the RTU messages are sent as SMS or e-mail.
- **Change immediately to communication mode**
  If you select the option, the RTU immediately switches to communication mode as soon as the desired action has been performed.
- **Recipient group**
  Enter the recipient group for the message. You configure recipient groups on the WBM page "Recipient / Groups".
- **Text**
  Select the subject of the configured message. You configure the texts on the WBM page "Tags" > "Texts".

6.11.4 Operating status

Operating statuses

Apart from using this WBM page you can also execute the functions described below using the button on the RTU, see section The button "WKUP/RESET" (Page 75).

The three buttons on this tab have the following functions:

- **Shut down to safe status**
  Shutting down to a safe status has the effect that the RTU books out of the mobile wireless network and ends all writes to the SD card. This is a requirement for changing a SIM card or an SD card.
  If you want to change the battery (when using only one battery module), you can then disconnect the device from the power supply.
- **Run a restart**
  When restarting, existing connections are interrupted and cyclic processing stops. The RTU restarts.
- **Reset to factory settings**
  Resets the RTU to the factory settings. During this all parameters are reset to the initial statuses as shipped and the RTU restarts.

Note

Note the effects of resetting

Note the effects described below before you start the reset.

Effects of resetting to factory settings

When you reset to factory settings, almost all the data on the RTU is deleted. Among other things, the following are deleted:

- User names and passwords
- PIN of the SIM card being used
- Diagnostics buffer
- All configuration data, including preset configuration data on the SD card

The following are not deleted:

- Configuration files saved manually on the SD card
- Log files on the SD card

Note

RTU not reachable via the mobile wireless network

After resetting to factory settings, the RTU can no longer be reached via the mobile wireless network.

If an SD card is plugged in, the following are also deleted:

- The automatically saved configuration file default.cfg
- The diagnostics buffer file

After the reset the RTU is restarted.

Following startup the RTU can only be reached via the Ethernet interface with the address data preset in the factory, refer to the section Address data of the RTU (Page 123).

Backing up configuration data prior to resetting

If you do not want to discard configuration data of the RTU, you can back up the data prior to resetting as follows:

- Configuration data on the SD card
  When using an SD card, you can remove the SD card prior to resetting and use it again after the reset. Since you cannot change the SD card during operation, you need to follow the steps below:
  - Shut down the RTU to the safe status
  - Remove the SD card
    Refer to the section Inserting the SIM card and SD card (Page 107) for this.
  - Reset to factory settings
  - After the restart when shut down the RTU to the safe status
  - Insert the SD card
- Saving on the configuration PC
  As an alternative you can save the configuration file on the configuration PC and following the reset and subsequent restart download it to the RTU, refer to the section Configuration (Page 144).

6.11.5 Online support

Here you can call up the Internet pages of Siemens Industry Online Support.

Online support

Link to the Internet portal of Siemens Industry Online Support

Click on "Siemens Industry Online Support" to connect to the Internet pages of Siemens Online Support.

There, you can search for information on the product or send a query to product support.

Configuration of the logging

In some cases, product support can send you a logging file of the type *.sup to log events. You save this logging file in the file system of the configuration PC. On this WBM page you download the file to the RTU.

For logging you require an SD card with at least 8 MB free space.

- **File**
  After a logging file stored on the configuration PC is selected using the "Browse" button, the file name is displayed here.
- **Browse**
  Searches the file system of the configuration PC for a logging file saved there that is intended to be loaded on the RTU.
- **Load on device**
  By clicking the button, download the selected logging file to the RTU.

- **Standard settings**
  Loads the default logging file preset in the factory instead of a file for logging made available by Product Support.
- **Delete**
  Deletes a no longer required logging file from the RTU.
  After deleting the logging file, logging is disabled again.

Enable logging

After loading the logging file, logging must be actively enabled.

- **Enable logging and save the file on the SD card**
  By enabling the option logging is started as soon as you click the "Apply" button.
  The log file is saved on the SD card and updated during operation if relevant events occur.

Use of the logging

You should only use logging of events. If you have problems with the RTU that you cannot solve yourself.

Note

Protecting the SD card by disabling logging

To avoid shortening the working life of the SD card too much, logging should be disabled during normal operation of the RTU.

When logging is enabled, during runtime the RTU continuously saves information about important events that have occurred. The saved data contains information on the configuration, active procedures and error situations.

The data is saved on the SD card in a log file with the name "support.bin". The logging data is not saved in plain text and can only be evaluated by Siemens Industry Support.

On completion of logging sent the log file back to your contact at Siemens Industry Online Support.

6.12 LAN

6.12.1 Overview

In this tab you will find the most important data of the Ethernet interface:

- **MAC address**
- **Connection status**
  Connection status to the Ethernet network
- **Transmission properties**
  Transmission speed and direction dependency (default: 100 Mbps, full duplex)

- **Connected since (dd:hh:mm:ss)**
- **Own IP address**
  Shows the preset, last configured or the last IP address to be obtained from the DHCP server.
- **Subnet mask**
  Shows the preset, last configured or the last subnet mask to be obtained from the DHCP server.
- **Default router**
  Shows the configured IP address of the router being used or the one last obtained with DHCP.
- **DNS server**
  Shows the configured IP addresses of the DNS servers in the network or last obtained with DHCP (max. 2).

6.12.2 Configuration

Configuration of the Ethernet interface

The Ethernet interface X1P1 of the RTU is used for local connection of the configuration PC or an external router for communication with the master station or cloud. It is not suitable for connecting larger local networks.

Control of the external router in the communication mode

- **Activate the LAN interface in communication mode**
  If the option is activated for the communication mode the LAN interface of the RTU is activated for data transfer.
  - **Control of external routers**
    If you use a router for data transfer, with this option you can turn on the router for the next communication cycle with a signal from the RTU. The router can then establish a tunnel connection to the communication partner.
    If you use a router, select from the drop-down list a control output of the RTU (X10 CTRL / X11 CTRL) or a digital output (DQx) as the signal source. The signal must be activated in the WBM!
    If you do not use a router, select the option "Not used".
  - **Lead time (s)**
    Here you can specify a lead time for the router before the communication cycle that the router needs to start up.
  - **Monitoring of external routers**
    If the router has a status output "Ready for data transfer", you can apply the signal to a digital input of the RTU to evaluate the router status.
    If you do not want to monitor the router, select the option "Not used". In this case, the RTU begins the data transfer when the lead time expires.

IP parameter

Note

DHCP client function

The DHCP client function of the RTU is activated when the following conditions are met:

- The "Specify IP address manually" option is disabled.

In this case, the DHCP server of the RTU cannot be activated.

The IP address of the RTU and optionally of the router and the addresses of up to two DNS servers are obtained from a DHCP server in the network.

As the host name, the DHCP server has the station name of the RTU configured in the "System" tab transferred to it.

If the option "Specify DNS server addresses manually" is enabled the entries obtained from the DHCP server are overwritten.

If the option "Use router" is enabled the entries obtained from the DHCP server are overwritten.

- **Specify IP address manually**
  If the option is activated you configure the parameters manually.
  - IP address
    Enter the IP address.
  - Subnet mask
    Enter the subnet mask.
- **Specify DNS server addresses manually**
  If the option is activated, you can configure one or two DNS servers for the LAN.
  - Preferred DNS server
    Enter the IP address of the preferred server.
  - Alternative DNS server
    Enter the IP address of a substitute server.
    If no substitute server is available, enter the address of the preferred server.

  Any addresses obtained from a DHCP server are overwritten.

- **Specify default router manually**
  If you use a router, activate the option.
  - Default router
    Enter the router IP address.

  An address obtained from a DHCP server is overwritten.
- **DHCP server active**
  If the option is active the RTU assigns the IP addresses to the configuration PC to be connected, the router and up to two DNS servers.
  As default the DHCP server function of the RTU is activated.

Note

IP addresses of the configuration PC

When using a DHCP server you do not need to specify the addressing on the configuration PC to be connected. When the PC is connected to the RTU, the RTU assigns the PC an IP address. This is the next higher address after the RTU's own address.

If the option is deactivated, you will need to assign a fixed IP address in the same subnet as the RTU to the connected configuration PC manually.

Note

No address check

The RTU does not check the address bands. If a duplicate IP address is detected, the STATUS LED flashes red and the RTU is no longer reachable via the Ethernet interface.

Network settings when using OpenVPN

If you use OpenVPN, make sure that the LAN subnet of the RTU and the OpenVPN subnet do not overlap otherwise no connection can be established to the RTU via OpenVPN.

Since the network settings of the OpenVPN server are not always precisely known, we recommend that you set the LAN subnet to 255.255.255.0 when using OpenVPN.

6.13 WAN

6.13.1 Overview

The following information on the mobile wireless connection of the RTU is displayed in the Overview:

Mobile wireless connection

- **Status of the SIM card**
  - Check mark on a green background
    Indicates that the entered PIN is identical with the PN on the SIM card.
    The PIN was saved successfully on the device.
  - Cross of a red background
    Shows that an incorrect PIN was entered or that the SIM card is not plugged in.
- **Connection established**
  Connection status to the mobile wireless network
- **Connected since (dd:hh:mm:ss)**
  Duration of the existing mobile wireless connection
- **Connection to data service established**
  Status of the connection to the data service GPRS, UMTS, LTE-M or NB-IoT
- **Data connection since (dd:hh:mm:ss)**
  Duration of the existing connection to the data service
- **Signal strength CSQ (dbm)**
  - CSQ = 0 .. 8 (-112 .. ≤ -97 dBm): No reception possible
  - CSQ = 9 .. 16 (-95 .. -81 dBm): Medium signal quality
  - CSQ = 17 .. 31 (≥ -79 dBm): Good signal quality
  - CSQ = 99 (≤ -113 dBm): No signal detectable
- **APN used**
  Name of the APN
- **IMEI**
  International Mobile Equipment Identity of the manufacturer
- **IMSI**
  International Mobile Subscriber Identity of the mobile wireless network provider
- **IP address**
  IP address of the RTU assigned by the mobile wireless network provider.
- **DNS server**
  IP address of the DNS server assigned by the mobile wireless network provider

Statistics

- **SMS sent**
  Number of SMS messages that the RTU has sent.
- **SMS in send queue**
  Number of SMS messages ready to be sent, but that have not yet been sent.
- **Sending the SMS failed**
  Number of SMS messages that were ready to be sent on the RTU that could, however, not be sent due to disruptions.
- **SMS received**
  Number of received SMS messages

- **SMS discarded**
  Number of received SMS messages that were discarded due to errors.
- **Data sent**
  Data sent in kilobytes
- **Data received**
  Data received in kilobytes
- **Reset statistics**
  Resets all the counters on this page to zero.

6.13.2 Mobile wireless settings

Note

Costs of a connection via the mobile wireless network

When attempting to establish a connection and when receiving a connection via the mobile wireless network frames are exchanged. Depending on the contract with the mobile wireless network provider costs may arise.

Mobile wireless settings

Here you configure the mobile wireless connection of the RTU.

- **Enable mobile wireless interface**
  Activates the mobile wireless interface of the RTU.
  If the mobile wireless interface is deactivated, the RTU can no longer be reached using mobile wireless.
- **Lead time before communication mode (s)**
  Configurable lead time in seconds for use of the mobile wireless interface with cyclic communication cycles.
  Range of values: 10 .. 180 s
  Default setting: 15 s
- **PIN of the SIM card**
  The PIN protects the mobile wireless contract partner from unauthorized use of the SIM card.
  The SIM card plugged into the RTU is a requirement for successful entry of the PIN.
  Enter the PIN for your SIM card that you received from your mobile wireless network provider in the input box.
  If you use a SIM card without a PIN, leave the input box empty.

  Note

  Locking if an incorrect PIN is entered three times

  If you enter the PIN incorrectly three times in succession, the SIM card will be locked. For information on unlocking, see below.

  An incorrectly entered PIN is not saved on the RTU.

- **Mobile wireless network parameter assignment** (RTU3041C / RTU3051C)
  The following options are available:
  - Global: For all users that are not AT&T or Verizon users
  - AT&T: For AT&T users
  - Verizon: For Verizon users
- **Selection of the mobile wireless standard**
  Here you specify the mobile wireless standard that the RTU is to use. The following options are available:
  - Automatic
    The mobile wireless network with the higher standard (UMTS/LTE-M or NB-IoT) is selected automatically.
    Fallback behavior of the RTU
    If the establishment of a connection via a mobile wireless network with UMTS/LTE-M or NB-IoT standard fails, the RTU attempts to dial in to an available network with the next lower mobile wireless standard (GSM).
  - Only GSM/GPRS
    The RTU attempts to establish a connection only in a GSM network (GPRS).
  - UMTS only (RTU3041C / RTU3051C)
    The RTU attempts to establish a connection only in a UMTS network.
  - NB-IoT only (RTU3041C / RTU3051C)
    The RTU attempts to establish a connection only in an NB-IoT network.
  - LTE-M only (RTU3041C / RTU3051C)
    The RTU attempts to establish a connection only in an LTE-M network.
- **eDRX interval (s)** (RTU3041C / RTU3051C)
  Select the interval in seconds.
  eDRX is an energy-saving function. To save energy, the mobile wireless connection is interrupted for the selected interval. After the interval has expired, the connection is established again and a check is performed as to whether data should be sent.
- **PLMN**
  This is where you enter the PLMN (Public Land Mobile Network) of the desired network provider. You can obtain PLMN from your network provider or find it on the Internet. PLMN is a worldwide unique identifier of mobile wireless networks consisting of:
  - MCC (Mobile Country Code)
  - MNC (Mobile Network Code) of the network provider

  Example: PLMN 26202 (Vodafone in Germany) consists of MCC = 262 and MNC = 02.
  - Input 0:
    The Home PLMN stored on the SIM card is used. This means the PLMN of the provider with whom the employed SIM card is registered. Sufficient if roaming is not enabled.
  - PLMN with enabled roaming
    To speed up the dial-in to the network and save battery capacity when roaming is enabled, enter the PLMN of network provider at the RTU's location. If you do not enter a PLMN, searching for a suitable network operator can take so long that cyclic communication mode is no longer possible.

- **Allow roaming**
  Roaming is dialing in to the mobile wireless network of a third-party provider when the mobile wireless network of your contracted mobile wireless network provider cannot be reached.
  - Option enabled:
    The RTU dials with highest priority into the mobile wireless network of the contracted network provider set on the SIM card. If a dialing up the contract network fails, the RTU dials up another mobile wireless network with which the network provider has a roaming contract and whose access data is stored on the SIM card.
  - Option disabled (no roaming):
    The RTU only dials up the mobile wireless network of the contract network provider whose SIM card is plugged into the RTU.

Note

IoT SIM cards for RTU3041C / RTU3051C

In the case of IoT SIM cards for the RTU3041C and RTU3051C, there is often no home PLMN on the SIM card, i.e. the RTU is constantly in roaming mode.

Recommendation: For fast connection establishment, enter the PLMN of the provider to which the SIM card used is registered.

If roaming is activated without an entered PLMN, connection establishment may take a very long time. With battery operation, battery life may be reduced significantly.

- **Enable data service in the mobile wireless network**
  Enable this option if you want to send data. In this case, make sure that your mobile wireless contract allows the use of IP-based data services.
  If the option is disabled, the RTU can only receive and send SMS messages, receive time of day frames and receive wake-up calls. The sending of data and e-mails is then only possible via the LAN interface.
- **Lead time before communication mode (s)**
  Configurable lead time in seconds for use of the mobile wireless interface with cyclic communication cycles.
  Range of values: 10 .. 180 s
  Default setting: 15 s
- **APN**
  When using data services, an access point is required as the gateway from the mobile wireless network to the Internet. The APN (Access Point Name) is the name of the gateway you receive from your mobile wireless network provider.
  Enter the APN in the input box.
- **User name**
  Enter the user name for the APN. You obtain access data from your mobile wireless network provider.
  If your mobile wireless network provider does not require access data, leave the boxes for user name and password empty.
- **Password**
  Enter the password for the APN. You obtain access data from your mobile wireless network provider.

- **Authentication method**
  Select one of the following authentication methods according to which the user name and password of the APN will be transferred:
  - No authentication
  - PAP
    Password Authentication Protocol
    Authentication protocol with unencrypted transfer of user name and password
  - CHAP
    Challenge Handshake Authentication Protocol
    Authentication protocol with encrypted transfer of user name and password
- **Specify DNS server addresses manually**
  If the option is activated, you can configure one or two DNS servers for the network of the mobile wireless interface.
  - Preferred DNS server
    Enter the IP address of the preferred server.
  - Alternative DNS server
    Enter the IP address of a substitute server.
    If no substitute server is available, enter the address of the preferred server.

  As the host name, the station name of the RTU configured in the "System" tab is used.
- **Enable answers to ping queries**
  If this option is enabled, the RTU responds to pings on the mobile wireless interface.

Notifications

- **When the IP address changes**
  Here you specify whether a message (SMS or e-mail) is sent to a configured group of recipients if the IP address changes (with dynamic assignment).
  This function represents a simple alternative to the DynDNS service. You do not require a DynDNS provider for this purpose
- **Recipient group**
  Here, enter the recipient group for the message. You configure recipient groups on the WBM page "Recipient / Groups".

Logging

Options for Signal strength and Cell ID detection as well for sent and received data:

- OFF: The process data is never saved to the SD card.
- Always: The process data is saved with each update cycle
- On change: Process data is saved only when the signal changes
- In the basic cycle: The process data is saved in the basic cycle
- **Data sent**
  Data sent in kilobytes
- **Data received**
  Data received in kilobytes

Unlocking the SIM card

If you have entered the PIN incorrectly three times, the SIM card will be locked and you then need to unlock the SIM card:

1. Remove the SIM card only when the power supply the RTU is turned off, refer to the section Inserting the SIM card and SD card (Page 107).
2. Insert the removed SIM card in a cell phone.
3. Unlock the SIM card by entering the PUK or the Super PIN.
   You will have received the PUK or super PIN from your mobile wireless network provider along with the SIM card.
4. Place the unlocked card back in the RTU.
5. After restarting the RTU enter the correct PIN via this WBM page.

6.13.3 Wireless cell

Note

Updating the data

The data on this page is updated at 1 second intervals.

Calling up this page means that the RTU uses more energy.

- **Wireless cell identifier (CI)**
- **Signal strength (CSQ / dBm)**
  Signal strength of the mobile wireless network as CSQ (Cell Signal Quality) and as received signal strength RSSI [dBm]
  CSQ and RSSI correspond as follows:
  - CSQ = 0 .. 8 (-112 .. ≤ -97 dBm): No reception possible
  - CSQ = 9 .. 16 (-95 .. -81 dBm): Medium signal quality
  - CSQ = 17 .. 31 (≥ -79 dBm): Good signal quality
  - CSQ = 99 (≤ -113 dBm): No signal detectable
- **Signal quality**
  Signal quality in percent
- **Location Area Code**
  Location identifier
- **Mobile wireless standard of the wireless cell**
- **Network type**
- **Network name**
- **PLMN**
  PLMN of the dialed network provider.

6.13.4 SMS

In this tab you can allow or block receipt of SMS messages by the RTU.

- **Allow receipt of SMS messages**
  If the option is enabled, the RTU can receive SMS messages.
  To allow further evaluation the received messages must correspond to the encoding GSM 3.38 or UCS.
  The following SMS messages are accepted:
  - Wake-up SMS to change the RTU from the sleep mode to the communication mode
    For information on the configuring wake-up SMA messages, refer to the section Wake-up call / wake-up SMS (Page 42).
  - SMS message as trigger for the sending of a diagnostics SMS message
    For diagnostics SMS messages, refer to the section Diagnostics options (Page 373).

  If the option is disabled, the RTU does not fetch any SMS messages from the SMSC.
- **Acknowledgment of wake-up SMS messages**
  If you enable the option, receipt of an SMS message is acknowledged by the RTU.
- **Additional communication cycle at a number of buffered SMS messages**
  The RTU stores up to 12 SMS messages that should not or cannot be sent immediately. When this number is reached and further messages are generated, the messages generated last are lost.
  Here, you can enter the number of stored SMS messages as of which the RTU runs through an additional communication cycle. This ensures that both all stored messages are sent and all messages from communications partners are received.
  Range of values: 0 ... 12
  If "0" is entered, the memory for data SMS messages is limited to 11 and there is no change to the communication mode. If there are already 11 data SMS messages stored and further data SMS messages are generated, the messages generated last are discarded. This allows the sending of at least one SMS message which has the attribute "Change immediately to communication mode".
  SMs messages that bring about an immediate change to the communication mode can be configured on the following pages:
  - System > SD card
  - Diagnostics > Notifications
  - Operating mode > Power supply
  - Program > Block "Send SMS" > parameter "Send immediately"

Test SMS

Here, for example, you can send a test SMS message during commissioning.

- **Recipient group**
  Here, enter the recipient group for the message. You configure recipient groups on the WBM page "Recipient / Groups".
- **Text**
  You select the subject of the configured message here. You configure the texts on the WBM page "Tags" > "Texts".
- **Send test SMS**
  Triggers the sending of the test SMS message.

Note

Check SMS service in mobile wireless network

Check with your network provider to find out whether the SMS function is supported in your mobile wireless network. In NB-IoT or LTE-M networks, in particular, the SMS function is not always supported by the network provider.

6.13.5 DynDNS

In this tab you can enable the use of address assignment by dynamic DNS (DynDNS) on the mobile wireless interface. To do this you require one of the service providers that can be selected below and the corresponding access data.

DynDNS is recommended when using HTTPS.

Note

DynDNS only with a public IP address

DynDNS can be used only with a public IP address. Check this with your network provider.

If you log the RTU on to a DynDNS service, the device can be reached from the Internet under a host name, for example "myName.dyndns.org".

Generally the RTU will not have a fixed IP address on the mobile wireless interface. By using a dynamic domain name system (DynDNS) it can however be reachable on the Internet. The public IP address is then made known by the DynDNS service.

With each dial in to the data network and if the IP address is changed on the mobile wireless interface, the DynDNS server is informed of the received IP address via HTTPS. An entry with the IP address is written to the diagnostics buffer.

The reachability of the IP address from the Internet must be enabled by the service provider.

- **Active**
  - If the option is enabled, the use of DynDNS is enabled.
  - If the option is disabled, the use of DynDNS is not enabled.
- **Service provider**
  You can select the following service providers:
  - DynDNS
    Address: https://www.dyndns.org/
  - No-IP
    Address: https://www.noip.com/
- **Host name**
  Host name of the RTU that you have agreed with your service provider.

- **User name**
  User name provided by the service provider.
- **Password**
  Password provided by the service provider.

CA certificate

The CA certificate of the DynDNS service provider serves to authenticate the service provider with the RTU. You can request the valid CA certificate from your provider.

Certificates are not absolutely necessary for operation.

- **Currently used file**
  Display of the file name of the currently used certificate file
- **Delete**
  With the button, you delete the currently used file.
  The file is deleted only after you click "Apply".
- **File used after applying**
  After loading the certificate, the name of the loaded file is displayed here.
- **Load new file**
  After a file stored on the configuration PC is selected using the "Browse" button, the file name is displayed here.
- **Browse**
  Searches the file system of the configuration PC for a certificate file saved there that is intended to be loaded on the RTU.
- **Load on device**
  With the button "Load on device" load the selected file on the RTU.

6.14 Services

6.14.1 Overview

Statistics since restart

The following information on transfer jobs since the last restart of the RTU is displayed in the Overview.

- **E-mails sent**
  Number of e-mails that the RTU has sent.
- **E-mails in send queue**
  Number of e-mails ready to be sent, but that have not yet been sent.
- **Sending e-mail failed**
  Number of e-mails that were ready to be sent on the RTU that could, however, not be sent due to disruptions.

- **Transfer FTP jobs**
  Number of FTP jobs that the RTU has transferred.
- **FTP jobs in send queue**
  Number of FTP jobs ready to be sent, but that have not yet been sent.
- **FTP jobs failed**
  Number of FTP jobs that were ready to be sent on the RTU that could, however, not be sent due to disruptions.
- **Reset statistics**
  Resets all the counters on this page to zero.

6.14.2 E-mail

In this tab you make these settings for sending e-mails. You will find the various types of e-mail in the section Communications services (Page 55).

The following data must be configured:

- **Active**
  If the option is activated, the RTU can send e-mails.
- **NTP server name**
  Name of the SMTP server. You will receive the data from your service provider.
- **Port number**
  Port number of the SMTP server. You will receive the data from your service provider.
- **Interface**
  Interface for transferring e-mails
- **Connection security**
  Here, select from the following options:
  - Only allow TLS and check the certificate
    With this setting, e-mails are only sent when STARTTLS is supported by the service provider.
    STARTTLS uses port no. 25 and by default port no. 587.
    To use STARTTLS a certificate is required.
  - TLS if possible
    With this setting, e-mails are also sent when STARTTLS is not supported by the service provider. In this case the transfer can also be unencrypted.
    If the service provider supports STARTTLS and TLS is negotiated, the certificate of the service provider is trusted and encrypted.
  - No TLS
    With this setting the e-mails are transferred unencrypted.
- **Own e-mail address**
  E-mail address of the RTU. You will receive the data from your service provider.

- **User name**
  User name required by the SMTP server. You will receive the data from your service provider.
- **Password**
  Password name required by the SMTP server. You will receive the data from your service provider.

CA certificate

Here, you have the option of configuring the CA certificate or intermediate certificate of the mail server or the individual server certificate for sending e-mail with STARTTLS.

- **Currently used file**
  Shows the name of the certificate file currently being used by the RTU.
- **File used after applying**
  Shows the name of the last certificate file to be loaded on the RTU (on clicking the "Load on device" button).
- **Load new file**
  After selecting a certificate file stored on the configuration PC using the "Search" button, the file name is displayed here.
- **Search**
  Searches the file system of the configuration PC for a certificate file saved there that is intended to be loaded on the RTU.
- **Load on device**
  By clicking the button, download the selected certificate file to the RTU.
- **Encrypt zipped attachments**
  If you enable the option, the attachments of the e-mails compressed as a ZIP archive are transferred encrypted.
  Use tools such as WinZip or 7Zip to extract the encrypted archives.
- **Password**
  Password for the encryption of the e-mail attachments.
  The attachments can only be decrypted with this password.

- **Additional communication cycle at a number of buffered e-mails**
  Here, you can enter the number of stored e-mails as of which the RTU runs through an additional communication cycle. This ensures that all stored messages are sent.
  The RTU stores up to 12 e-mails that should not or cannot be sent immediately for example because the connection to the SMTP server is disrupted. When this number is reached and further messages are generated, the messages generated last are discarded.
  Range of values: 0 ... 12
  If "0" is entered, the memory for data e-mails is limited to 11 and there is no change to the communication mode. If there are already 11 data e-mails stored and further data e-mails are generated, the messages generated last are discarded. This allows the sending of at least one e-mail which has the attribute "Change immediately to communication mode".
  E-mails that bring about an immediate change to the communication mode can be configured on the following pages:
  - System > SD card
  - Diagnostics > Notifications
  - Operating mode > Logging
  - Operating mode > Power supply
  - Program > Block "Send e-mail" > parameter "Send immediately"
- **Repetitions for a temporary error**
  You can set here how transmission errors in the email transfer are handled in the buffer:
  - Only in the same communication cycle
    The frames are discarded if the transfer was not successful in a communication cycle.
  - In the same and 2 communication cycles
    The frames are discarded if the transfer was not successful in three consecutive communication cycles.
  - Endless
    The RTU keeps trying to send the frames until the transfer is successful.

Test e-mail

Here, for example, you can send a test e-mail during commissioning.

- **Recipient group**
  Here, enter the recipient group for the message. You configure recipient groups on the WBM page "Users / groups > Recipient groups".
- **Subject**
  You select the subject of the message here. You configure the subject and the text of the message on the WBM page "Tags" > "Texts".
- **Send test e-mail**
  Triggers the sending of the test e-mail.

6.14.3 FTP

In this tab you make the settings for the transfer (PUT function) of files to an FTP server.

The function is made possible by the program block "FTP file transfer".

In "Operating mode > Logging" you can still configure the transfer of the previous log file when a new log file is created.

The FTP client uses the configured control port. The data port is negotiated with the server.

The following data must be configured:

- **Active**
  If the option is activated, the RTU can use the FTP service.
- **FTP server name**
  Name of the FTP server. You will receive the data from your service provider.
- **Port number**
  Port number of the FTP server. You will receive the data from your service provider.
- **Interface**
  Interface for FTP file transfer
- **Connection security**
  Here, select from the following options:
  - Only allow TLS and check the certificate
    With this setting only files encrypted with TLS are transferred.
    To use TLS a certificate is required.
  - TLS if possible
    The data is sent even if the service provider does not support TLS. The data may then be transmitted unencrypted.
    If the service provider supports TLS and TLS encryption is negotiated, the service provider's certificate is trusted and the data is transmitted encrypted.
  - No encryption
    With this setting the files are transferred unencrypted.
- **User name**
  User name required by the FTP server. You will receive the data from your service provider.
- **Password**
  Password required by the FTP server. You will receive the data from your service provider.

CA certificate

Here, you have the option of configuring the CA certificate or intermediate certificate of the FTP server or the individual server certificate of the FTP server.

- **Currently used file**
  Shows the name of the certificate file currently being used by the RTU.
- **File used after applying**
  Shows the name of the last certificate file to be loaded on the RTU (on clicking the "Load on device" button).
- **Load new file**
  After selecting a certificate file stored on the configuration PC using the "Search" button, the file name is displayed here.
- **Search**
  Searches the file system of the configuration PC for a certificate file saved there that is intended to be loaded on the RTU.

- **Load on device**
  By clicking the button, download the selected certificate file to the RTU.
- **Encrypt zipped files**
  If you enable the option, the files compressed as a ZIP archive are transferred encrypted. Use tools such as WinZip or 7Zip to extract the packed and encrypted archives.
- **Password**
  Password for the encryption of the transfer
  The transferred files can only be decrypted and opened with this password.
- **Additional communication cycle at a number of buffered FTP requests**
  Here, you can enter the number of stored files as of which the RTU runs through an additional communication cycle. This ensures that all files waiting for transfer are sent.
  If the connection to the FTP server is disrupted, the RTU stores up to 12 files for transfer. When this number is reached and further files are generated, the files generated last are lost.
  Range of values: 0 ... 12
  If "0" is entered, the memory for data files is limited to 11 and there is no change to the communication mode. If there are already 11 data files stored and further data files are generated, the files generated last are discarded. This allows the transfer of at least one file which has the attribute "Change immediately to communication mode".
  Files that bring about an immediate change to the communication mode can be configured on the following pages:
  - Operating mode > Logging
  - Program > Block "FTP file transfer" > parameter "Send immediately"
- **Repetitions for a temporary error**
  You can set here how transmission errors in FTP transfer are handled in the buffer:
  - Only in the same communication cycle
    The frames are discarded if the transfer was not successful in a communication cycle.
  - In the same and 2 communication cycles
    The frames are discarded if the transfer was not successful in three consecutive communication cycles.
  - Endless
    The RTU keeps trying to send the frames until the transfer is successful.

Paths of the FTP server

If you do not want to save the files in the standard directory of the server, you can specify optional paths here.

The configured paths must correspond to the path names on the server. If the paths do not exist, they are created by most servers when the first transfer is made.

6.15 Security

6.15.1 Overview

VPN 1 and VPN 2 connection

Both VPN connections are shown on this overview page with the same structure.

- **Connection exists to the OpenVPN server**
  Connection status to the OpenVPN server
- **IP address**
  Shows the last IP address assigned by the OpenVPN server.
- **Subnet mask**
  Shows the last subnet mask assigned by the OpenVPN server.

Note

Network settings when using OpenVPN

If you use OpenVPN, make sure that the LAN subnet of the RTU and the OpenVPN subnet do not overlap otherwise no connection can be established to the RTU via OpenVPN.

For information on the LAN settings, refer to the section LAN (Page 158).

- **Active OpenVPN server**
  Name or IP address of the OpenVPN server
- **Connected since (dd:hh:mm:ss)**
  Duration of the existing connection to the OpenVPN server

Statistics of the current connection

The numbers apply to the currently established connection.

For the meaning of the parameters, see below.

Statistics since restart

The numbers apply to all connections that were established since the last restart of the RTU.

- **Bytes received**
  Number of bytes that the RTU has received.
- **Frames received**
  Number of frames that the RTU has received.
- **Received frames lost**
  Number of frames received by the RTU that it could not process..
- **Bytes sent**
  Number of bytes that the RTU has sent.
- **Frames sent**
  Number of frames that the RTU has sent.
- **Frames to be sent lost**
  Number of frames, which were ready to send on the RTU that could, however, not be sent.

6.15.2 VPN 1 / VPN 2

The configuration for the VPN tunnels is performed here. The second, independent VPN tunnel is configured under VPN 2.

For the requirements for using OpenVPN, refer to the following section:

- Scope of delivery, accessories, requirements (Page 51)
- Security functions for communication (Page 29)

For VPN tunnels the following alternatives can be configured:

- **SINEMA Remote Connect**
  SINEMA RC is the recommended Siemens application for OpenVPN tunnels.
- **OpenVPN**
  With this option configure a freely selectable OpenVPN server.

SINEMA Remote Connect

- **Active**
  Select the relevant option from the drop-down list to enable secure communication via SINEMA Remote Connect.
  You will find the address data in the configuration of SINEMA RC.
- **SINEMA Remote Connect-Server**
  IP address or host name of the SINEMA RC Server
- **Port number**
  Port number of the SINEMA RC Server.
- **Currently used port number**
  Currently used port number of the SINEMA RC server.
- **Interface**
  Interface for communication:
  - LAN
  - WAN
- **Lead time before communication mode (s)**
  Configurable lead time in seconds for use of the mobile wireless interface with cyclic communication cycles.
  Range of values: 10 .. 180 s
  Default setting: 15 s
- **Device ID**
  Device ID that was assigned to the RTU in the SINEMA RC Server configuration.
- **Password**
  Password that was assigned to the RTU in the SINEMA RC Server configuration.

- **Check for changed certificates before connection establishment**
  If this is enabled, the RTU checks whether new or changed (fallback) certificates are present in the SINEMA RC depending on the selected value in the "Reduction factor for communication cycle" field. The check takes place either in the case of a planned cyclic communication mode or in the case of a permanent connection after a connection abort. In the case of a permanent connection, the check takes place more frequently than the selected reduction ratio in order to save data volume and time.
  If it is disabled, the check only takes place if no OpenVPN connection could be established during the communication cycle and a new connection establishment is started via SINEMA RC.
- **Reduction factor for communication cycle**
  Selecting an entry from the drop-down list specifies the reduction factor in which the RTU checks whether new or changed certificates are present.
  The basis for the checking cycle is the basic cycle of the communication mode that you configure on the WBM page "Operating mode".
  If you choose a reduction factor of 1, the system checks for new or changed certificates on each change to communication mode.
  If you choose a reduction factor higher than 1, the cycle is increased by the displayed value.
- **Fingerprint currently being used**
  The fingerprint currently being used by the RTU
- **Fingerprint**
  Here enter the fingerprint that was assigned to the RTU in the SINEMA RC Server configuration.
  The RTU supports SHA-256.

VPN

- **Active**
  Select the option "OpenVPN" from the drop-down list to enable secure communication via a freely selectable OpenVPN server.
  With the following parameters, make sure that these match the settings of the OpenVPN server.
- **OpenVPN server**
  IP address or host name of the OpenVPN server
  Separated by a space: Port number of the server (UDP port). The default port has the number 1194.
  Example:
  192.168.234.1 1194
- **Substitute OpenVPN server (optional)**
  IP address or host name of an optional substitute OpenVPN server
  Separated by a space: Port number of the server (UDP port)
- **Interface**
  Interface for communication:
  - LAN
  - WAN

- **Lead time before communication mode (s)**
  Configurable lead time in seconds for use of the mobile wireless interface with cyclic communication cycles.
  Range of values: 10 .. 180 s
  Default setting: 15 s
- **Verification of the server certificate necessary**
  The function is optional but for security reasons is, however, recommended.
  If this option is enabled during connection establishment, the client checks whether the certificate of the server is actually a server certificate based on the purpose of the certificate. This ensures that no other client can pretend to be a server with its valid client certificate.
- **Cipher**
  The following encryption standards are available:
  – AES-256_CBC
  – AES-128_CBC

  Note

  AES-128_CBC not recommended

  This encryption standard is no longer recommended for security reasons and may also no longer be supported in future firmware versions of the RTU.

  Note: As of version V4.0, the non-secure method BlowFish is no longer supported. Older VPN configurations need to be adapted.
  The parameter must be set the same on the server and client.
- **Hash method**
  As hash algorithms for authenticating the user data the following can be used:
  – SHA-256

  The parameter must be set the same on the server and client.
- **Key exchange time (s)**
  Maximum time for the TLS key exchange after initializing the handshake.
  Range of values: 0 .. 65535 s. Default: 60 s. If you enter 0 (zero), the function is deactivated.
  Note that 60 seconds with bad connection quality may not be adequate.
- **Keepalive monitoring time (s)**
  If the partner does not respond to the keep alive frame of the RTU or another frame within the keepalive monitoring time, the RTU aborts the connection and attempts to reestablish it.
  If the OpenVPN server is reached using its DNS name then along with the monitoring frame a new DNS resolution is performed. In particular when the server uses a DynDNS service and occasionally changes the IP address increasing the monitoring time can make sense.
- **Renewal interval for session key (s)**
  Interval (seconds) at which the session key is exchanged with the server.
  Range of values: 0 .. 65535 s. Default: 3600 s. If you enter 0 (zero), the function is deactivated.
  This interval can be set on the server and client. If the configured values differ the shorter interval is used.

- **Compression method LZO**
  To increase the transmission speed in the VPN tunnel with compression, you can select the following options:
  - None
    There is no compression is used.
  - On
    Compression procedure that compresses all data.
  - Adaptive
    Adaptive compression with which the OpenVPN stack regularly checks the compression. When the effect of the compression is slight, the compression is turned off and activated again in a later check.

  Note

  Compression not recommended

  For security reasons, the recommendation is that no compression is enabled.

- **User name (optional)**
  See Password
- **Password (optional)**
  For additional security of the OpenVPN connection, enter a user name and a corresponding password. In addition to the certificates, the OpenVPN server then checks the correctness of the entries.

Below you can load the certificates and keys individually or alternatively as a common PEM file from the OpenVPN server.

CA certificate

Here you import the CA certificate generated by the certification authority (CA).

Make sure that the files for the CA certificate, the client certificate and for the key are separate and not in a common *.pkcs12 file. A *.pkcs12 file cannot be imported.

- **Currently used file**
  Display of the file name of the currently used file
- **File used after applying**
  After loading the file, the name of the loaded file is displayed here.
- **Load new file**
  After selecting a file stored on the configuration PC using the "Search" button, the file name is displayed here.
- **Browse**
  Searches the file system of the configuration PC for a certificate file saved there that is intended to be loaded on the RTU.
- **Load on device**
  By clicking the button, you download the selected file to the RTU.

Own certificate

Here, you import the client certificate for the RTU.

- **Currently used file**
  Display of the file name of the currently used file
- **File used after applying**
  After loading the file, the name of the loaded file is displayed here.
- **Load new file**
  After selecting a file stored on the configuration PC using the "Search" button, the file name is displayed here.
- **Browse**
  Searches the file system of the configuration PC for a certificate file saved there that is intended to be loaded on the RTU.
- **Load on device**
  By clicking the button, you download the selected file to the RTU.

Own key

Here you import the file of the private key generated by the assigned OpenVPN server.

- **Currently used file**
  Display of the file name of the currently used file
- **Password**
  Here, enter the password if the key password is protected.
- **File used after applying**
  After loading the file, the name of the loaded file is displayed here.
- **Load new file**
  After selecting a file stored on the configuration PC using the "Search" button, the file name is displayed here.
- **Browse**
  Searches the file system of the configuration PC for a key file saved there that is intended to be loaded on the RTU.
- **Load on device**
  By clicking the button, you download the selected file to the RTU.

Load PEM file

If you want to load the two certificates and the key from the OpenVPN server as a common PEM file, then enable this option.

- **Password**
  Enter the password specified with the OpenVPN server if you exported the key password-protected.
- **File used after applying**
  After loading the file, the name of the loaded file is displayed here.
- **Load new file**
  After selecting a file stored on the configuration PC using the "Search" button, the file name is displayed here.

- **Browse**
  Searches the file system of the configuration PC for a PEM file saved there that is intended to be loaded into the RTU.
- **Load on device**
  By clicking the button, you download the selected file to the RTU.

6.15.3 WBM

The requirement for using HTTPS via the Internet / mobile wireless network is a publicly accessible IP address of the RTU.

Note

Connections with HTTPS access via the mobile wireless interface

The RTU makes precisely one connection available on the mobile wireless interface. You should therefore use browsers that also only operate with one connection (Mozilla Firefox, Apple Safari). With browsers that require at least two connections (e.g. Edge, Chrome) no functioning connection will be established or the Web pages will not be displayed correctly.

Note

Updating pages with HTTPS access

Use the following options to update and reload a Web page:

- The WBM button "Update"
- Click on the link of the required page in the navigation on the left in the browser window
- Repeat the entry in the address line

Avoid updating pages using the standard browser mechanisms ("Reload page" or F5).

Depending on the device and the mobile wireless network, the setup of the pages can take several seconds and with a bad connection or cell change be interrupted.

Session settings

The following settings apply for access via LAN and via mobile wireless.

- **Note on login page**
  Enter the text to be displayed in red font on the RTU login page. The text length is limited to 160 characters. Spaces and line breaks count as characters.
- **Number of characters**
  Shows the current number of characters being used in the text.
- **End session after inactive period (minutes)**
  From the drop-down list, select the time after which a session is automatically closed on the WBM if no user input has been detected.
  You need to log in again with user name and password after closing a session. As long as a user is logged in, the RTU does not change to sleep mode.

Protection against brute force attacks

- **Minimum password length**
  Minimum length of passwords from all configured users.
  Value range 8 ... 20, default: 8
  When the value is changed, there is a check to determine whether the passwords of all users meet the new minimum length.
- **Maximum number of login attempts**
  Number of allowed incorrect entries for "User name" / "Password" before the protection is activated.
  Value range 1 ... 15, default: 3
- **Monitoring period (seconds)**
  Monitoring period in seconds for the allowed incorrect entries at "Username" / "Password" before the protection is activated.
  Value range: 10 ... 255 s, default: 10 s
- **Blocking duration (seconds)**
  Duration of protection against brute force attacks, if enabled.
  Value range 5 ... 255 s, default: 5 s

HTTPS

- **Allow only HTTPS access**
  If the option is activated, connections can only be established to the WBM of the RTU with HTTPS. Non secure connections with HTTP are not permitted.
  If you connect to the RTU via an HTTP connection, activate and save this option, the existing HTTP connection between the PC and RTU can no longer be used. After activating and saving this option the new HTTPS URL of the RTU is displayed as a link at the top of the page. Click on the link to remain connected to the RTU without an interruption.

  Note

  HTTP connection attempt

  If you deactivate the option "Allow only HTTPS access" when an HTTPS connection to the RTU exists, you must first close the browser and reopen it to be able to connect via HTTP.

- **Enable HTTPS on the WAN interface**
  Select the option to enable secure communication with the RTU via the internet and the mobile wireless network using HTTPS. To achieve this port 443 on the WAN interface is opened.
  HTTPS is always enabled on the LAN interface.

Own certificate

In the factory settings the RTU uses a self-issued server certificate for authentication with the communications partner (client). In the browser of the PC from which you want to connect to the RTU, in this case a message is displayed when establishing the connection.

Note

Warning message regarding the certificate (HTTPS)

When you establish the connection via HTTPS when you log in a warning message is displayed indicating that the Web page is unsafe or that the certificate is not trustworthy. If you are sure that you have entered the correct address, ignore the message. Also add the connection to the exceptions in your Web browser (depending on the browser).

Alternatively, you can import a third-party certificate. For example, it can be a certificate signed by a public certification authority and issued to the host name you have entered under DynDNS and under the RTU which you can reach on the Internet.

- **Currently used file**
  Display of the file name of the currently used file
- **Delete**
  With the button, you delete the currently used file. The file is deleted only after you click "Apply".
  After deleting an imported certificate, the RTU once again uses the self-issued certificate from the factory settings.
- **File used after applying**
  After loading the certificate, the name of the loaded file is displayed here.
- **Load new file**
  After a file stored on the configuration PC is selected using the "Browse" button, the file name is displayed here.
- **Browse**
  Searches the file system of the configuration PC for a certificate file saved there that is intended to be loaded on the RTU.
- **Load on device**
  With the button "Load on device" load the selected file on the RTU.

Own key

With the factory settings, the RTU uses a self-issued server certificate and the matching private key for authentication with the communication partner (client).

If you import a third-party certificate, you must also import the corresponding private key here. The private key must not be encrypted with a password.

- **Currently used file**
  Display of the file name of the currently used file
- **Delete**
  With the button, you delete the currently used file.
  The file is deleted only after you click "Apply".
- **File used after applying**
  After loading the key file, the name of the loaded file is displayed here.

- **Load new file**
  After a key file stored on the configuration PC is selected using the "Browse" button, the file name is displayed here.
- **Browse**
  Searches the file system of the configuration PC for a key file saved there that is intended to be loaded on the RTU.
- **Load on device**
  With the button "Load on device" load the selected file on the RTU.

6.15.4 Event buffer

Event buffer

The event buffer contains messages about security events. It can hold a maximum of 48 entries. When the maximum number is exceeded, the oldest entries are overwritten.

When the RTU is in communication mode, events can be transmitted to a Syslog server via the Syslog protocol.

If the option "Always connected" is selected for the RTU, the events are sent as soon as they occur.

If this option is cleared, the events are collected in the local event buffer and only transmitted when the RTU is back in communication mode.

The entries in the event buffer contain the following information:

- **Time stamp**
  Time stamp of the RTU when the entry was created.
- **Sent**
  Shows whether or not the message was successfully sent to the Syslog server.
  Green check mark: The message was sent successfully.
  Red cross: The message could not be sent, there is an error.
  Empty field: There has not yet been an attempt to send or Syslog is not activated.
- **Host name**
  Station name of the module at the time of the event.
- **Facility**
  Origin of the message.
- **Severity**
  Severity of the message.
- **Event text**
  The message as ASCII string in English. You can find explanations of the message in the appendix Syslog Messages (Page 427).

6.15.5 Syslog

Syslog

Syslog according to RFC 5424 is used for transferring short, unencrypted text messages over UDP in the IP network. A Syslog server or a SIEM system are required for this.

- **Active**
  When enabled, the device sends security events to a Syslog server.
- **Syslog server**
  Enter the IP address of the Syslog server. A DNS address is not supported.
- **Port number**
  Specify the port on which the Syslog server receives the messages. Default port is 514.
- **Interface**
  Selection of the interface via which the device sends the messages:
  - LAN
  - WAN
  - VPN 1
  - VPN 2

Switching to communication mode for

- **New event upon severity**
  Select the severity of the event from which the system is to switch to communication mode.
- **Number of buffered events**
  Enter the number of buffered events from which the system is to switch to communication mode.
  Possible entries: 0 ... 48
  If the value 0 is entered, the function is disabled.

6.16 Users / groups

6.16.1 User

Incorrect entry / loss of the user name or passwords

Note

With the following user data you can log in the first time to the WBM.

User data	Default values set in the factory
User name	admin
Password	admin

Note

Changing the password

For security reasons, the factory set default password of the standard user must be changed when you log in the first time.

Note

Loss of changed standard user data

Note changed or newly assigned user names and passwords.

If you change user data of the standard user, lose the changed user data and have not created a second user, you no longer have access to the WBM of the RTU. In this case, you can only access the WBM after resetting the RTU to the factory settings. Resetting to factory settings involves the loss of the configuration data, refer to the section Operating status (Page 155).

Note

Entering the wrong user name or password

After entering an incorrect user name or incorrect password three times within 10 seconds, a lockout time of 5 seconds begins after which you can log in again. The number of attempts, waiting times and lockout times can be configured.

User

A total of 20 users can be created.

Table

The table shows all users and their configured data.

- **Add**
  Creates a new user.
  When you create a new user, you need to assign the name, the user name and the password. You can leave the other data boxes empty and complete them later.
- **Delete**
  Deletes the user selected in the table above.
  When you click the "Delete" button, two buttons are displayed as a prompt for confirmation:
  - Delete
    Deletes the selected user once and for all.
  - Cancel
    Cancels the deletion and the normal picture of the WBM page is shown again.

  All users except at least one user with administrator rights can be deleted.

You configure the individual users below the table.

Change user

The following data can be configured optionally. Some data is necessary for the communication functions of the RTU.

Select a user in the table with the mouse.

- **Name**
  Name of the user (not the user name)
  Use:
  - Only for display on this page and on the "Receiver group" page.
  - Only for organizing the configured users.
  - Is saved in the module and as plain text in the configuration files (SD card or on download to PC).
  - Can be pseudonymized for data protection reasons.
  - Is not processed further or automatically transmitted to Siemens.
- **Company/department/position**
  Here, you can configure organizational characteristics of the user.
  Use:
  - Only for display on this page.
  - Only for organizing the configured users.
  - Is saved in the module and as plain text in the configuration files (SD card or on download to PC).
  - Is not processed further or automatically transmitted to Siemens.

- **Phone number**
  The phone number of the user configured here is the authorized telephone number for waking the RTU and for receiving SMS messages by the RTU.
  For these functions the user requires a phone with the number entered here. The telephone must support the CLIP function (transfer of its own call number).
  The telephone number can be used for receiver lists to send text messages (SMS) to the number entered here.
  Use:
  - Only for display on this page and on the "Receiver group" page.
  - Is saved in the module and as plain text in the configuration files (*.cfg).
  - Only for filtering incoming calls, diagnostics SMS and as destination address for user-configured SMS notifications.
  - Is not processed further or automatically transmitted to Siemens.

  Configuring the phone number

  - You will find the characters permitted in the section Permitted characters and parameter lengths (Page 116).
  - An asterisk (*) after the body of a phone number enables connection establishment for all phones with a phone number containing the body of the phone number (e.g. body + extension numbers). However, an entry with an asterisk cannot be used for sending SMS.
    Example: The entry +49-123456* entitles the following phone numbers:
    +49-123456-0, +49-123456-1, +49-123456-2 ...
    +49-123456-100, +49-123456-101 ...
  - If only an asterisk (*) is entered in the input box, the RTU accepts wake-ups / SMS messages from all senders. However, an entry with an asterisk cannot be used for sending SMS.
    Remember that with this option, the authorization is lost and due to incorrect calls costs for connection establishment attempts may result.
- **Role**
  Select one of the following roles:
  - Administrator: The administrator can make settings on all WBM pages. Creating or deleting users is also possible. Administrators can change their own data and that of other users, including the logon credentials (user name, password). The "admin" user is the administrator by default. At least one administrator must be activated.
  - User: A "User" cannot make any configuration changes.
- **Wake-up call allowed (RTU303xC)**
  Only when this option is enabled does the RTU allow receipt of a wake-up call by this user. You will find further notes on waking the RTU in the section Wake-up call / wake-up SMS (Page 42).

- **Allow receipt of SMS messages**
  Only when this option is enabled does the RTU evaluate wake-up SMS messages or request SMS messages for a diagnostics SMS message from this user.
  Make sure that the receipt of SMS messages by the RTU is enabled on the WBM page "WAN" > "SMS".
- **E-mail address**
  E-mail address of the user for receiving e-mails sent by the RTU.
  Use:
  - Only for display on this page and on the "Receiver group" page.
  - Is saved in the module and as plain text in the configuration files (*.cfg).
  - Is only used as destination address for emails configured by the user.
  - Is not processed further or automatically transmitted to Siemens.

To change the access data (user name, password), you need to select the "Change login data" check box. The input boxes can then be edited.

- **Change login data**
  When this option is enabled, you can change user data.
- **User name**
  Enter a user name.
  Use:
  - Serves as login name and is shown in the header of the WBM.
  - Is saved on the module and as plain text in the configuration files (SD card or on download to PC).
  - In the event buffer and on transfer of syslog messages to identify the user.
  - Is not processed further or automatically transmitted to Siemens.
- **Password**
  Enter the new password.
  Use:
  - Is saved on the module and encrypted in the configuration files (SD card or on download to PC).
  - Serves only for authorization in the WBM.
  - Is not processed further or automatically transmitted to Siemens.
- **Repeat password**
  Repeat the new password.

By clicking "Apply" the changed data is saved and needs to be entered at the next login.

6.16.2 Recipient groups

Recipient groups

Here you specify the recipient groups for messages (SMS messages / e-mails) of the RTU.

When configuring the individual message types, you always specify a recipient group in the WBM as the recipient of the messages.

With the recipient groups you specify which message types are received by which groups of users. For example with a group concept. You can specify that certain messages are received by employees active in operation and other message types by service employees.

Every user can be assigned to any number of the maximum 10 groups.

Table

The table shows all recipient groups and their configured data.

- **Add**
  Creates a new group.
  When creating a new group, you need to assign the name and select the group type. You can leave the description empty and complete it later.
  You must assign at least one user to be able to save the new group.
- **Delete**
  Deletes the group selected in the table above.
  When you click the "Delete" button, two buttons are displayed as a prompt for confirmation:
  - Delete
    Deletes the selected group irrevocably.
  - Cancel
    Cancels the deletion and the normal picture of the WBM page is shown again.

You configure the individual groups below the table.

Change group data

Select a group in the table with the mouse.

- **Name**
  Enter the group new name.
- **Description**
  As an option, you can enter a description of the group.
- **Group type**
  Using the drop-down list, you specify which message type the group will receive.

Specifying group members

Using the list of all configured users at the bottom of the page, you specify the members of the group selected in the table above.

Select the check box to the left of the user name to assign this user to the recipient group.

6.17 Operating mode

6.17.1 Operating modes

You will find the description of the Operating modes in the section Modes and operating modes (Page 39).

Note

Power consumption

Note that frequent update and communication cycles increase the power consumption of the RTU greatly. This applies in particular when there is permanent booking into the mobile wireless network, when there are frequent queries of the GPS position (RTU30x1C) and when the LAN interface is frequently activated.

Update mode

- **Basic cycle**
  Use the drop-down list to define the basic cycle (1 second..7 days) for updating the inputs and outputs.
  In every cycle, the RTU interrupts the sleep mode, reads the inputs, processes the program blocks and updates the outputs.
- **Additional cycle**
  Use the drop-down list to define an additional update cycle (1 second ... 24 hours) for updating the analog inputs and the expansion card.
  In every cycle, the RTU interrupts the sleep mode, reads the inputs, processes the program blocks and updates the outputs.
- **Start time of the update cycle**
  Synchronizes the update cycle with this time of day.
- **Start day of the update cycle**
  Synchronizes the update cycle with this day.
  The option is only available if "7 days" is configured as the basic cycle.
- **Additional update cycles**
  Using the drop-down list, you specify whether 1 to 3 additional update cycles in addition to every configured basic cycle are run through to execute the program again. In the additional cycles the program is executed.
  The inputs are not read in the additional cycles.
  If you select "0" only the basic cycle is used.

Communication mode

In the cycle configured here, the RTU activates all the interfaces and services used, establishes a connection to its communication partner and sends all buffered messages and files. In every cycle, the RTU interrupts the sleep mode.

You configure the communication partner on the WBM page "TeleControl". There you will find further parameters for the transfer settings on the page of the protocol, being used.

A connection is always established by the RTU. With the DNP3 and IEC protocol the master instigates connection establishment.

The time-of-day synchronization is performed with the communication cycle.

- **Always remain connected**
  If you enable this option, the RTU remains permanently in the communication mode and connected to the communication partner.
- **Basic cycle**
  From the drop-down list, specify the basic cycle (3 minutes ... 7 days) for communication.
- **Start time of the communication cycle**
  Synchronizes the communication cycle with this time of day.
  The communication mode starts with a lead time so that the RTU is reachable at the configured times. The basic lead time of the RTU is made up of the following times that are added:
  - With configured mobile wireless interface: 15 seconds (default)
  - With enabled DHCP client: + 10 seconds
  - With configured data service: + 45 seconds (default)
  - For each configured OpenVPN service +15 seconds (default)

  To respond to the time required for establishing the connections, you can adjust the basic lead time (except with enabled DHCP client).
  When using the LAN interface in communication mode via an external router, the lead time configured there applies, see section LAN (Page 158).
  If shortly before expiry of the minimum duration the connection still needs to remain established (e.g. sending an e-mail), the communication mode is extended by the required time.
- **Start day of the communication cycle**
  Synchronizes the communication cycle with this day.
  The option is only available if "7 days" is configured as the basic cycle.
- **Minimum duration**
  After connection establishment, the RTU first sends its stored data (messages, event-related process data) to the partner. Under certain circumstances in mobile wireless networks it can take a while for a response from the partner to reach the RTU.
  So that the RTU does not terminate the connection too early without having received new data from the partner or without the OpenVPN connection being established, you can configure a waiting time here (30 s ... 10 min).
  The RTU maintains the connection for the configured Minimum duration as of the configured start time. This only applies to planned communication cycles via the cyclic timer or a TeleService SMS. The minimum time is not taken into account with spontaneous communication cycles. In this case, communication mode is stopped as soon as the pending communication task (e.g. sending a spontaneous email or spontaneous telecontrol events) is complete.
  If you select "No" the RTU terminates the connection after sending its own data and receiving the acknowledgement from the partner, however at the earliest at the configured start time.
- **Start test communication mode**
  By clicking the button you can turn on the communication mode for test purposes, for example during commissioning.

Sleep mode

- **Turn on mobile wireless interface regularly and check for receipt of wake-up SMS message?**
  Using the drop-down list, you specify whether the RTU dials into the mobile wireless network in addition to the communication cycle to fetch any existing SMS messages. The following options are available:
  - No
    The RTU does not turn on the mobile wireless interface between the communication cycles.
  - 10 minutes .. 24 hours
    Check cycle in which the RTU books into the mobile wireless network to fetch SMS messages.
  - Check permanently
    The RTU remains permanently booked into the mobile wireless network. Only with this setting can the RTU accept wake-up calls in sleep mode.
- **Start time of checking cycle**
  Time at which the checking cycle begins. Afterwards the checking cycles take place according to the setting of the parameter above.

Service mode

- Minimum duration
  Using the drop-down list, you specify how long the RTU remains in service mode after pressing the "WKUP" button.
  When the last user has logged out of the WBM, the Service mode is ended earlier.

In service mode the LAN interface and the LEDs are enabled.

Note

Power consumption

Note that in Service mode the power consumption of the RTU increases considerably.

6.17.2 Logging

You will find the naming conventions of the log files in the section SD card (Page 135).

- **Active**
  Selecting the check box turns on logging. A further requirement is a plugged in SD card.
- **Log file creation**
  Here you specify the cycle in which new log files are created: Daily, weekly, monthly

- **Response when insufficient memory space on SD card**
  Here you specify the response if there is no longer enough memory space on the SD card for new log files:
  - Delete older log files
    The process data continues to be acquired. When the SD card is full, with the creation of new log files the oldest log files are successively deleted (FIFO principle).
  - Stop logging
    Already stored process data is retained. When the SD card is full, saving new process data is suspended until data is deleted manually from the SD card.
- **Time stamp format**
  You specify the format of the time stamp for each log entry here:
  - Local time
  - Local time with time zone specification
  - UTC

  The time stamps are then formatted as follows in the log file (examples at the same time):
  - Local time
    2022-09-12 23:20:50.123
  - Local time with time zone
    2022-09-12T23:20:50.123+01:00
  - UTC
    2022-09-12T22:20:50.123Z
- **Separator**
  Here, you specify the separate between the individual blocks of data in the log file: Comma, colon or semicolon
- **Log file name prefix**
  Here you can enter a name prefix with a maximum of 20 characters that is placed at the beginning of the file name of the log file.
- **Maximum number of Log files**
  Here you specify the maximum number of log files that will be saved on the SD card: Max. 999999

- **Send last log file by e-mail when a new one is created.**
  If the option is enabled, the last log file is sent as an attachment of an e-mail as soon as a new log file is created.
  - **Recipient group**
    Here you select the recipient group for the e-mails with the log files.
    Configuration of the recipient groups in "Users / groups"
  - **Subject**
    Here, select the subject of this e-mail.
    Configure the subject in "Tags" > "Texts"
  - **Text**
    Here, select the text for this e-mail.
    Configure the text in "Tags" > "Texts"
  - **Attachment zipped**
    If you enable the option, the attachment is sent as a compressed ZIP archive.
  - **Change immediately to communication mode**
    If you select the option, the RTU changes immediately to communication mode as soon as a new log file is ready for sending.
- **Transfer last log file using FTP when a new one is created.**
  If the option is enabled, the last log file is sent to the FTP server as soon as a new log file is created.
  - **Server path**
    Here you have the option of selecting a path that you configured in "Services > FTP".
  - **Append**
    If the option is enabled, the transferred file will be appended to the FTP server. On the server no file of the same name will be overwritten.
  - **Transfer delta**
    When the option is enabled, the RTU saves the last successfully transferred log file internally. On a new transfer, only the difference between the last successfully transferred log file and the current log file is sent.
    The option cannot be used in connection with the active setting "Transfer file as ZIP archive".
  - **Transfer header on every transfer**
    If the option is selected, the RTU transmits the header in addition to the difference during each FTP transfer.
    The option cannot be used in conjunction with the activated "Transfer file as ZIP archive" option.
  - **Transfer file as ZIP archive**
    If you enable the option, the file is transferred as a compressed ZIP archive.
  - **Change immediately to communication mode**
    If you select the option, the RTU changes immediately to communication mode as soon as a new log file is ready for sending.

6.17.3 Power supply

Power supply

Here you configure the various options for the power supply of the RTU, changing battery modules, the power outputs of the RTU and possibly notifications.

Designation of the battery modules:

- Battery module 1 is the right module which along with its battery expansion modules is connected directly to the RTU.
- Battery module 2 is the left module which along with its battery expansion modules is connected to the left of module 1.

For information on the location and labeling of the battery modules and battery expansion modules, refer to the appendix Battery module and battery expansion module (Page 403).

Note

Battery modules in the WBM

In the WBM a battery module (module 1 or module 2) along with its battery expansion modules forms a common logical unit.

A battery module can only be connected or disconnected in its entirety in the WBM. This includes the supply via the relevant expansion modules.

External power supply

- **Connected**
  Enable the option if you supply the RTU with an external source of power.

Battery module 1 / Battery module 2

- **Connected**
  Enable the option if you supply the RTU with the relevant battery module (with or without expansion modules).
  Enable the two following options only if you use optional battery expansion modules.
- **Expansion module 1 connected**
  Enable the option for the first battery expansion module.
- **Expansion module 2 connected**
  Enable the option for the second battery expansion module.
- **Battery status**
  Shows the status of the battery during operation.

- **Connect battery**
  - Click the button to connect the plugged in battery module and its expansion modules logically with the RTU.
  - In the subsequent input screen, enter the capacity of the battery module.
  - Confirm the capacity or adjust the value.

  Without the connection on this WBM page, the RTU does not access the physically plugged in battery module.
  When connecting the RTU checks the voltage level of the batteries in the battery module. It detects empty or defective batteries as well as incorrect physical connections of the batteries. You should therefore check the feedback in the WBM to make sure that the batteries have been accepted by the RTU.

- **Disconnect battery**

  Note

  Disconnection necessary for battery replacement

  Without the disconnection in the WBM, the RTU continues to access the physically plugged in battery module.

  By clicking the button, you disconnect the plugged in battery module and its expansion modules logically from the RTU.
  The RTU checks whether a disconnection is permitted in the current operating situation. Disconnection is only possible if the RTU is supplied either via the external power supply or via the other battery module at this point in time.
  If at the time of disconnection another battery module with an adequate voltage level is connected, the RTU switches internally to the other battery module and releases the module to be disconnected for a battery change.

Battery switchover

- **Use the preset value**
  Enable the option if the RTU is to use the preset voltage value of 80% as the signal for switching over the battery modules.
  By default, the RTU switches over to the second battery module when the voltage value of the first module falls below 80% of the nominal voltage of 7.2 volts, which means a threshold value of ≤ 5.76 V.
  When this option is disabled, you can enter a different threshold value manually. In rare cases, this can be practical, for example when connected sensors put heavy load on the battery with high current peaks.

Control outputs

- **Output voltage (X10 CTRL, X11, X40, X42)**
  From the drop-down list select the voltage (12 VDC or 24 VDC) at the voltage outputs of the RTU.
  Outputs X40 and X42 are supplied with the voltage configured here in the update cycle if the associated analog inputs are configured with power supply "On". If an extension board is used, the X10 CTRL output is supplied with this voltage.
  With the next three check boxes enable the voltage of outputs X10 and X11.
- **Always supply X10 with voltage**
  If the option is enabled, X10 CTRL has the voltage configured above applied to it.
  If an external power supply exists and is available, the X10 CTRL output is always supplied by the external source.
- **Supply X10 CTRL from battery if external voltage fails.**
  If the option is enabled, X10 CTRL is supplied from the battery modules if the external power source fails. Note that this can involve a considerable shortening of the battery lifetime.
  If the option is disabled, no voltage is applied to X10 CTRL if the external power source fails.
- **X10 control signal**
  You can control the voltage at X10 via the user program with this option. Sensors can only be switched on when required and the energy consumption of the RTU is reduced.
  As control signal, you can use:
  - Digital input 0..7; digital inputs 0 and 1 must be defined as digital inputs and not as counters.
  - All digital outputs
  - All digital memory bits
    The voltage is not activated with value 0 of the digital tag. As soon as the value of the tag is set to 1, the voltage is output at X10.
  - Digital system tags (if enabled):
    - STATUS_ERROR
    - STATUS_RUN
    - STATUS_COM_LAN
    - STATUS_COM_MOBILE
    - STATUS_COM_WAN
    - STATUS_COM_VPN_1
    - STATUS_COM_VPN_2
    - STATUS_COM_TC
    - STATUS_COM_TC_REDU

  Select the following options:
  - **Signal unused**
    The function is disabled for X10 (default). If no digital tags are configured, this is the only setting option.
  - **Digital tag ...**
    Selection of tags used to release the voltage at X10.

  If the "Always supply X10 with voltage" option is enabled, only the "Signal unused" option can be selected.

- **Supply X11 CTRL with voltage in update mode**
  If the option is enabled, X11 CTRL is supplied with the voltage configured above in update mode. Note that this involves increased power consumption.
  If the RTU is not in update mode, the outputs have no voltage applied.
  If the option is disabled, X11 CTRL never has a voltage applied.
- **X11: Lead time before update cycle (ms)**
  Here enter a value (ms) for a period during which the output X11 has voltage applied to it before the RTU changes to update mode. This value serves to damp down any voltage fluctuations at the inputs of the RTU when turning on X11.
- **X11 control signal**
  You can control the voltage at X11 via the user program with this option. Sensors can only be switched on when required and the energy consumption of the RTU is reduced.
  As control signal, you can use:
  - Digital input 0..7; digital inputs 0 and 1 must be defined as digital inputs and not as counters.
  - All digital outputs
  - All digital memory bits
    The voltage is not activated with value 0 of the digital tag. As soon as the value of the tag is set to 1, the voltage is output at X11.
  - Digital system tags (if enabled):
    - STATUS_ERROR
    - STATUS_RUN
    - STATUS_COM_LAN
    - STATUS_COM_MOBILE
    - STATUS_COM_WAN
    - STATUS_COM_VPN_1
    - STATUS_COM_VPN_2
    - STATUS_COM_TC
    - STATUS_COM_TC_REDU

  Select the following options:
  - **Signal unused**
    The function is disabled for X11 (default). If no digital tags are configured, this is the only setting option.
  - **Digital tag ...**
    Selection of tags used to release the voltage at X11.

  If the "Always supply X11 CTRL with voltage in update mode" option is enabled, only the "Signal unused" option can be selected.

Notifications

- Using the drop-down list, select whether or not the RTU sends notifications as SMS messages or e-mails.
  Messages can be sent after the following events:
  - Reaching a configurable operating time of the battery
  - After changing over the battery module
- **Change immediately to communication mode**
  If you select the option, the RTU changes immediately to communication mode as soon as one of the named events occurs.
- **Recipient group**
  Here you select the recipient group for the messages.
  Configuration of the recipient groups in "Users / groups"
- **After battery operating time of:**
  If the option is enabled, a message is sent when the configured value of the operating time of the active battery module is reached after being activated by the RTU.
- **Runtime (days)**
  Enter a value for the number of days after which the message is sent.
  If you enter 0, the function is deactivated.
- **Text**
  Here, select the text for this message.
  Configure the text in "Tags" > "Texts"
- **After battery changeover**
  This option only makes sense when using two battery modules.
  If the option is enabled, a message is sent when the RTU changes from one battery module (including optional expansion modules) to the other battery module. The RTU changes from the active module to the second battery module (substitute module) when the voltage value of the active module sinks below the critical threshold value.
  The advantage of this is that the active module can be completely emptied before switching to the second battery module and a message being sent. After sending the message there is normally enough time for a battery change and the capacity of the batteries is used to the best effect.
- **Text**
  Here, select the text for this message.
  Configure the text in "Tags" > "Texts"

Changing batteries

Note

Battery type

Only use the batteries described in the Appendix of the manual. Correct battery operation is only ensured with these battery types.

Changing both batteries

Always replace both batteries of a battery holder with new batteries.

If you only replace one battery this can destroy the new battery. In this case, correct battery operation of the RTU could not be guaranteed.

Changing all batteries of a module

If you add one or two battery expansion modules to a battery module, we strongly recommend that you replace all batteries of a unit (battery module + battery expansion modules).

To change the batteries, you first need to disconnect the battery module being used in the configuration. Follow these steps:

1. In the WBM, open the page. "Power supply".
2. Disconnect the battery module currently being used in the parameter group. "Battery module 1" / "Battery module 2".

NOTICE
Remove the battery only after disconnecting Pull the connector of the battery holder in the battery module only when the battery is displayed as "disconnected" in the WBM.

3. Shut down the RTU to the safe status if you only use a single battery module (including any expansion modules) and no external power supply. See section Operating status (Page 155) for information on this.
   If you use two battery modules or an external power supply, skip this point.
4. Open the battery module whose battery you want to change.
   For a battery change you do not need to separate the battery module from the RTU and do not need to take it from the DIN rail.
   Lift up the cover on the front of the module. To ensure a secure grip, there is a recess on the right-hand underside.
5. Pull the connector of the battery holder and remove the battery holder from the battery module.

NOTICE
Do not place the battery holders on a conductive surface Never place the battery holders on an electrically conductive surface (e.g. the outer housing). The battery contacts can establish a short-circuit connection in the battery via a conductive surface. This can destroy the battery.

6. Change the batteries and place the battery holder back in the battery module.
7. Plug the connector of the battery holder in the correct position in the socket X10 BATTERY of the battery module. To protect against voltage reversal, the connector is coded.
8. Close the battery module.
9. Finally, connect the battery module in the WBM on the page "Power supply", see above.

Note the information on handling used batteries in the section Batteries: Replacement, recycling and disposal (Page 381).

6.17.4 Battery service life

Remaining battery capacity

In this tab (as of HW2), the calculated remaining capacity of the batteries, the consumption since the last activation and the theoretical remaining value are indicated. This calculation should help to better estimate electricity consumption.

Exact calculation of the remaining capacity of the battery is not possible since this depends on numerous factors, for example, the connected consumers, changing outdoor temperatures and, above all, the frequency of configured events such as limits of measured values being exceeded.

Battery capacity

- **Battery module 1/2**
  Calculated capacity of the respective module. The capacity of the battery decreases due to self-discharge, current consumption at low temperatures and high current peaks. These effects are determined separately for the respective battery module and offset against the nominal capacity of the batteries.
- **Consumption since last activation**
  Shows the measured consumption since the last activation of the currently used module.
- **Total remaining capacity**
  Displays the calculated capacity. The value results from the sum of the battery capacity over all connected battery modules minus the consumption since the last activation.
  The remaining capacity is available as a variable BAT_RES_CHARGE in the user program.

Logging

- **Remaining capacity**
  Using the drop-down list, you can enable logging of the value of the calculated remaining capacity.

6.17.5 Batteries: Estimating the working life

Working life of the batteries

The power consumption of the RTU depends on many factors, the connected consumers, changing outdoor temperatures and above all on the frequency of configured events such as limits of measured values being exceeded. A precise calculation of the power consumption of the RTU is therefore not possible.

To estimate the power consumption of the RTU, you can list the frequency of the individual operating modes expected by you or configured and derive a rough value for the daily power consumption of the RTU from the specific consumptions.

You will find the electrical data in the section Technical specifications (Page 383).

The procedure in principle, is shown in the two following tables.

Note

Real values can significantly deviate from these.

Note that the numbers shown as an example below can deviate significantly from the real behavior of the RTU in daily use.

Calculate an adequate reserve.

Table 6-2 Estimation of the power consumption of the RTU per day

1	2	3	4	5	6
Status	**Current consumption (mA)**	**Capacity used per minute (Ah / min) ***	**Number of cycles per day**	**Status duration (minutes) per day**	**Ampere hours per day (Ah / d) ** **
Sleep mode (basic consumption)	0.28	0.00000467		1421	0.0066
Update mode (assumption: 0.5 minutes per cycle)	71	0.00118	24	12	0.0142
Communication mode (assumption: 1.5 minutes per cycle)	208	0.00347	2	3	0.0104
Reserve (e.g. for service mode or events)	100	0.00167		4	0.0067
Sum of the capacity used per day (Ah / d)					**0.038**

***** Value column 2 divided by (1000 times 60)

****** Value column 3 times value column 5 - rounded

Table 6-3 Estimation of the service life of a battery module

Status	Value
Assumed capacity (Ah) of six batteries (1 battery module with two battery expansion modules) at the time of starting (3*13 Ah)	39
Sum of the capacity used per day (Ah/d) (Value from the table above)	0.038
Estimated working life in days (39 / 0.038)	**1029**

When a configured service life of the battery is reached, you can have the RTU send a message, see section Power supply (Page 197).

6.18 Tags

6.18.1 Overview

Overview

Table

In the overview table all tags are shown as symbols with identifiers. By clicking on a symbol. You can directly to the WBM page for configuring this tag type.

Symbols of unconfigured tags are gray, symbols of configured tags are green with different information.

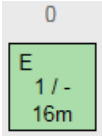

Figure 6-3 Example of the symbol of digital input 0

The information has the following meaning:

- Identifier
  - E = configured as an event counter (only digital input 0 or 1)
  - C = configured as consumption counter (only digital input 0 or 1)
  - L = Logging enabled

  In the example (graphic): Configured as an event counter, logging not enabled.
- x / y
  Frequency of the use of the address in the user program:
  - x = Use as an input
  - y = Use as an output
    Digits show the frequency of use.
    The minus sign means that no use as an output is possible.

  In the example (graphic): used once as input / cannot be used as output
  Among other things you can see here when an address is not used at all in the program.
- Update cycle
  The individually configured update cycle as the product of the basic cycle and reduction factor is displayed.
  In the example (graphic): 16 minutes

Update cycle

- Basic cycle
  The basic update cycle is displayed at the top right on the WBM page.

Copy of the process image

- **Save to PC**
  By clicking the button, you can save the current process image as a *.txt file on the configuration PC.

6.18.2 Configuration of the tags, general parameters

Structure of the WBM pages for tags

The following WBM pages for the tags show a table at the top of the page with all available tags of the relevant type. The most important parameters are displayed for the configured tags.

Exceptions: For the internal temperature and the external power supply, you can only create one tag in each case. On these pages there is no table.

When you open a page in the lower area the parameters of the first tag are shown that you configure by making entries and selecting options.

Enabling and configuring tags

1. Click on a row in the table at the top of the WBM page
2. Assign the tag a meaningful name in the "Name" input box.
3. Configure the other necessary parameters and save your entries.

General parameters

Some often repeated parameters on the WBM pages of the tags are only described at this point.

Enabling and names of the tags

You need to configure the two following parameters for all tags except the tags for texts:

- **Active**
  If the option is enabled, the tag for productive operation is enabled.
  Unless it is enabled, the tag will not be processed in productive operation. (The tags for texts are always enabled.)
  To disable tags that are already enabled and integrated in the program or tag table, you first need to delete the use of the tag in the user program.
- **Name**
  Assign the tag a unique name.
  When the communication protocol "TeleControl Basic" is used, the tag names are included in the addressing of the OPC items.
  Note:
  In the list of data points (WBM page "TeleControl" > "Data points"), an abbreviation is added to all tag names to form the data point name:
  - "-I" and "-I_MEAN" for inputs
  - "-Q" for outputs

  Example for analog input 0 named "Fuellstand": "Fuellstand-I"; the associated mean value: "Fuellstand-I_MEAN"
  Example for digital output 2 named "Alarm": "Alarm-Q"

Logging

In the "Logging" parameter group, you specify whether and when the process data of the tags is stored on the SD card.

- **Logging**
  Options:
  - OFF
    The process data is never saved to the SD card.
  - Always
    The process data is saved with each update cycle
  - On change
    Process data is saved only when the signal changes
  - In the basic cycle
    Saving the process data in the individual basic cycle of the relevant tag
    Example:
    - basic cycle = 10 s
    - Reduction factor for basic cycle = 2
    Result: The process value is saved every 20 seconds.

Format

The parameters in the parameter group "Format" are optional and can be left empty.

Here, you specify texts for the individual tags, which are used when writing the process values to the SD card and for transferring process values in messages (SMS / e-mails).

- **Parameters for digital tags (except counters):**
  - **Text for "ON"**
    Enter a text that replaces the value "1" of the process value (for example, "ON").
  - **Text for "OFF"**
    Enter a text that replaces the value "0" of the process value (for example, "OFF").
- **Parameters for analog tags and counters (inputs and memory bits):**
  - **Unit**
    Enter a text for the physical unit (for example, "l/s").
  - **Format**
    Here, you specify the format of the value to be written to the SD card or displayed in the tag table.
    With analog inputs the box has the default [V.2].
    With counters the box has the default [V].
    Note the following rules:
    The square brackets and the letter V R placeholders for the tag name. They must not be changed.
    The period and the digit following it indicate the number of decimal places (max. 6). If you write the values of a tag to the SD card only with 1 decimal point or want to display them in the tag table, configure the parameter as follows: [V.1]

  For information on programming messages with process values, refer to the section Blocks for messages (Page 347).

Syntax

Separate decimal places in input boxes with a period.

Note the characters permitted for the input boxes, see section Permitted characters and parameter lengths (Page 116).

6.18.3 Digital inputs

In total, you can configure eight digital inputs.

Digital input 0 and 1 for counter inputs

Of the eight digital inputs only the first two can be configured as fast counter inputs up to 5 kHz. These two inputs have a fixed filter time of 0.2 milliseconds.

Digital input 2 to 7 for binary inputs

If you use the two inputs for binary digital inputs, note that under certain circumstances this can lead to bouncing effects. For binary digital inputs you should preferably use digital inputs 2 to 7.

Parameters

Depending on the configuration of the tags as counters or binary inputs, the parameters differ.

- **Active**
- **Name**
- **Type**
  Assign the tags to one of the following types:
  - Digital input
    The tag type is intended for binary inputs.
    Format: Bool (1 bit)
  - Event counter (max. 5kHz)
    The tag type is intended for counter inputs.
    Format: Integer without sign (32 bits)
  - Usage meter (max. 5 kHz)
    The tag type is intended for usage metering in the positive range.
    Format: Floating-point number with sign (32 bits)
- **Inverted**
  Only configurable with the "Digital input" type.
  Specifies whether the input is used as "Normally Open" (option disabled, default) or as "Normally Closed" (function enabled). With an active inverted function, a logical 0 (FALSE) at the digital input is displayed at the digital input as logical 1 (TRUE) and used in the user program.
- **Initial value**
  Only with counters: Enter an initial value that the tag uses as a basic value.

- **Counter type**
  Only with event counters
  - Incremental
  - Decremental
- **Pulse weighting: amount**
  With usage meters, the parameter is used for the calculation to convert the sensor value to the process value (number of pulses per physical unit).
  Enter the amount that corresponds to the number of pulses specified in the row below.
- **Pulse weighting: number of pulses**
  With usage meters, the parameter is used for the calculation to convert the sensor value to the process value (number of pulses per physical unit).
  Enter the number of pulses to which the amount specified in the row above corresponds.
- **Current value**
  With event counters and binary inputs: Display of the value of the input
- **Current sensor value**
  Only with usage meters: Display of the value of the input
- **Current process value**
  Only with usage meters: Display of the physical value after converting the pulse weighting
- **Read**
  Click on the button to display the current value of the input.
- **Preset value**
  Optional with counters: You can write the count value entered here to the tag.
- **Write**
  Optional with counters: Click the button to write the entered count value to the tag.

Update cycle

- **Reduction factor for basic cycle**
  The reduction factor lowers the update cycle for this input.
  With a factor of 2, for example, the update cycle of this input is halved: The input is read only half as often as configured in the basic cycle. You configure the basic cycle in "Operating mode".
- **Additional update cycle on value change**
  Only with binary inputs
  - No
    The input is read only in the configured update cycle.
  - Yes, also in sleep mode
    The input is also read during the sleep mode.
    If the option is enabled, if a value changes during the sleep mode all digital inputs are read, the program is run through and the outputs updated.
    Note that with this setting, frequently changing signals can significantly increase power consumption.

Format

With counters:

- **Unit**
- **Format**

With binary inputs:

- **Text for ON**
- **Text for OFF**

Logging

See section Configuration of the tags, general parameters (Page 206).

6.18.4 Digital outputs / Digital memory bits

Digital outputs / Digital memory bits

Parameters

- **Active**
- **Name**
- **Current value**
  Display of the value of the output / memory bit
- **Initial value**
  Only with digital bit memory
  Preset value that the tag will use as the basic value.
- **Read**
  Click on the button to display the current value.
- **Preset value**
  Optional: You can write the value entered here to the tag.
- **Write**
  Click the button to write current preset value to the tag.

Format

- **Text for ON**
- **Text for OFF**

Logging

See section Configuration of the tags, general parameters (Page 206).

6.18.5 Analog inputs

Analog inputs

The tags can be used for various analog signals (see "Measured variable / measurement type")

Data format: Floating-point number with sign (32 bits)

For the analog input AI0 it is possible to configure running through additional update cycles during the sleep mode of the RTU, see parameter "Update on value change in sleep mode".

The inputs X41/0 and X41/1 measure at the same time, the inputs X43/0 and X43/1 following this and one after the other. It is recommended to place measurements with large settling times on connectors X41/0 and X41/1 to keep the update time and the power consumption of the RTU low.

Parameters

- **Active**
- **Name**

Measure

- **Measured variable / measurement type**
  and
- **Output signal / measuring range**
  Select the required measured variable (measurement type) and the required output signal or the temperature measuring range:
  - Voltage
    0 .. 5 V
    0 .. 10 V
  - Current (2-wire connector)
    4 .. 20 mA
  - Current (4-wire connector)
    0 .. 20 mA
    4 .. 20 mA
  - Temperature (Pt1000)
    -80 .. +140 °C
    -112 .. +284 °F
- **Power supply**
  If you want to supply the sensor with voltage from the RTU, select the option "ON". The voltage X40 and X42 can only be turned on with a lead time before every update cycle. The lead time is formed from the settling time and integration time times the smoothing factor. With current sensors the option is preset with "ON".
- **Settling time of the sensor (ms)**
  The settling time is the time the sensor requires to return a stable measured value after turning on the power supply.
  Range of values: 0 .. 30000 ms
  The sum of the settling time and integration time multiplied by the smoothing factor must not exceed the time of the update cycle (basic cycle multiplied by reduction factor).

- **Integration time of the sensor (ms)**
  The integration time is used to match the sampling time of the input of the RTU with the conversion of time of the sensor.
  From the drop-down list, select a time that comes closest to the integration time (or conversion time) of the sensor. If you do not know the integration time of the sensor, select the lowest value.
  Note that high integration times increase the power consumption of the RTU.
  Range of values:
  - 40 ms
  - 100 ms
  - 250 ms

  Note the effect of the integration time on the formation of the output signal of the tag, see "Smoothing".
- **Smoothing**
  With this parameter the signal read in is smoothed in every update cycle by reading the applied signal several times. The individual values are read at intervals of the integration time configured above.
  The selectable smoothing degrees (see range of values) correspond to different smoothing factors. The smoothing factor decides how often the analog value is read in every update cycle. Example: With smoothing degree. "Weak" the input is read four times.
  From the individually read values, the mean value is formed which is written to the process image via the output parameter of the tag. This value is then used for further processing by the program and for saving or transfer to the communications partner.
  Range of values:
  - None
    Smoothing factor 1
  - Weak
    Smoothing factor 4
  - Medium
    Smoothing factor 16
  - Strong
    Smoothing factor 32
- **Current sensor value**
  Display of the value of the input signal
- **Read**
  Click on the button to display the current value of the input.

- **Current process value**
  Display of the physical value that is calculated after configuration of the measuring range (see below).
- **Cable error correction**
  Only for temperature measurement
  Select one of the following options:
  - No
    The measured value is not corrected by the cable resistance.
  - Indication of the resistance
    If you select this option, an input box for entering the cable resistance is displayed. Enter the measured or calculated cable resistance. Based on the cable resistance entered, the RTU corrects the measured value.
  - Indication of the cable data
    If you select this option, 3 input boxes for entering the following parameters of the laid cable are displayed.
    - Specific resistance (Ω*mm^2/m)
    - Cable length (m)
      (simple length)
    - Cable cross section (mm^2)
    Based on this information, the RTU calculates the cable resistance and corrects the measured value.

Specification of the measuring range

To specify the measuring range enter the lower interpolation point (interpolation point 1) and the upper interpolation point (interpolation point 2) for the input signal (sensor value) and the corresponding physical value (process value).

- **Sensor value (interpolation point 1)**
  Low value of the input signal
- **Process value (interpolation point 1)**
  Corresponding low value of the physical value
- **Sensor value (interpolation point 2)**
  High value of the input signal
- **Process value (interpolation point 2)**
  Corresponding high value of the physical value
- **Process value, range**
  Displays the configured process value range

Logging

See section Configuration of the tags, general parameters (Page 206).

Additional value

- **Mean value generation**
  Select a degree of mean value generation over several update cycles:
  - None
    No mean value generation
  - Weak
    Mean value generation over 2 cycles
  - Medium
    Mean value generation over 4 cycles
  - Strong
    Mean value generation over 8 cycles

Diagnostics messages

- **Wire break**
  If wire break is detected at life-zero inputs, if the option is enabled a message is entered in the diagnostics buffer
  With other measured variables, the option has no effect.
- **Outside the measuring range**
  If the option is enabled, a message is entered in the diagnostics buffer when under/overvoltage or under overcurrent is detected.
  With temperature measurements, the option has no effect.
  For over/undershoot ranges or over/underflow, refer to the section "Measuring ranges".

Regardless of configured diagnostics messages, the LED of an input (Aix) is lit red with wire break, over/undervoltage or under/overcurrent.

Basic cycle

- **Reduction factor**
  The reduction factor decreases the frequency of the basic cycle for this input. The interval between the update cycles is therefore increased.
  Example: With a basic cycle of 10 seconds and a reduction factor of 2, the frequency of the update cycle for this input is halved, the input is read only every 20 seconds.
  You configure the update cycle under "Operating mode".
  Note the comments made about the parameters "Settling time" and "Integration time".

- **Enable signal**
  Reading of the analog signal is limited in time by the option. This allows sensors to be switched on only when required. This reduces the energy consumption of the RTU.
  Reading the measured value is only enabled when the digital signal of a tag is set. You can use the following as the enable signal:

  – Digital input 0..7; digital inputs 0 and 1 must be defined as digital inputs and not as counters

  – All digital outputs

  – All digital bit memories

  – All digital STATUS_Tags

  The analog signal is not read in with the value 0 of the digital tag.
  As soon as the value of the tag is set to 1, reading of the analog signal is enabled.
  Meaning of the drop-down list entries:

  – **Signal unused**
    The function is disabled for this analog input (default). The analog signal is read in with each update cycle.
    If no digital tags are configured, this is the only setting option.

  – **Negation**
    If negation is active (circle symbol to the left of the signal selection), the analog signal is not read with value 1 of the digital tag.
    As soon as the value of the tag is set to 0, reading of the analog signal is enabled.

  – **Digital tag ...**
    Select a tag for enabling the reading.

  The initial check of the enable signal occurs at the beginning of the update cycle of the analog inputs after completion of the lead time (settling time + integration time). If not all configured inputs are active at this time, a new lead time for the inactive inputs is calculated and the RTU switches to sleep mode.
  The enable signals are checked again at the beginning of the repeated update cycle. If the inputs are now active, reading of the analog inputs begins and the power supply of the inputs X40/X42 is switched on.
  If the signals have changed again in the meantime, the system switches to sleep mode again.
  If the enable signals of all inputs are 0 at the beginning of the update cycle, no input is read in.
  Special consideration for input AI0:
  The "Enable signal" and the option "Update on value change in sleep mode" cannot be configured at the same time.

Additional cycle

With these options, you can reduce or increase the basic cycle and the duration of the update cycle by a factor.
You configure the additional cycle under "Operating mode". The basic cycle and additional cycle can be used simultaneously.

The factor is configured independently of the reduction factor for the usual operation ("Additional cycle", see above). As soon as the value of the analog input no longer meets the following conditions or the activation signal is "false", the "Basic cycle" for this tag is deactivated.

The "Additional cycle" is used in the following situations:

- **Reduction factor for each update cycle**
  Factor for reducing (or increasing) the reduction factor for the previously activated situations:
  - Activation signal is activated
  - Process value lower than low limit value
  - Process value higher than high limit value
  - Change of the process value higher than "Threshold"
    The Threshold is the configurable change as a percentage compared with the last value read.
- **Update cycle of this input**
  Displays the base cycle and the resulting cycle of the input when the reduction factor is changed.

The factor for using the "Additional cycle" is configured below. One, two, three or all four of the following conditions can be configured:

- **Activation signal**
  The option is used to time limit the reading of the expansion card in the "Basic cycle". Devices can thus only be switched on when required. This reduces the energy consumption of the RTU.
  Reading the measured value is only enabled when the digital signal of a tag is set. You can use as activation signal:
  - Digital input 0..7; digital inputs 0 and 1 must be defined as digital inputs and not as counters
  - All digital outputs
  - All digital bit memory
  - All digital STATUS_Tags

  The analog signal is not read in with the value 0 of the digital tag.
  As soon as the value of the tag is set to 1, reading of the analog signal is enabled.
  Meaning of the drop-down list entries:
  - **Signal unused**
    The function is disabled for this analog input (default). The analog signal is not read.
    The only setting option if no digital tags are configured.
  - **Negation**
    If negation is active (circle symbol to the left of the signal selection), the analog signal is not read when the value of the digital tag is 0.
    As soon as the value of the tag is set to 1, reading of the analog signal is enabled.
  - **Digital tag ...**
    Select which tag is used to activate reading.

  The initial check of the enable signal occurs at the beginning of the update cycle of the analog inputs after completion of the lead time (settling time + integration time). If not all configured inputs are active at this time, a new lead time for the inactive inputs is calculated and the RTU switches to sleep mode.
  The enable signals are checked again at the beginning of the repeated update cycle. If the inputs are active now, the reading of the analog inputs starts and the voltage supply of the inputs X40/X42 is switched on.
  If the signals have changed again in the meantime, the system switches to sleep mode again.
  If the enable signals of all inputs are 0 at the beginning of the update cycle, no input is read in.
  Special consideration for input AI0:
  The "Activation signal" and the option "Update on value change in sleep mode" cannot be configured at the same time.

- **Activate limit value**
  If the option is selected, a "high" or "low" threshold will be set respectively for the use of the "Additional cycle". You can enable the conditions independently of each other.
  - **Lower limit value (process value)**
    If the process value violates the low limit, the "Additional cycle" is activated for the input and the tag is read in at the configured interval.

  - **Upper limit value (process value)**
    If the process value violates the high limit, the "Additional cycle" is activated for the input and the tag is read in at the configured interval.

- **Activate threshold**
  If activated, a threshold is monitored as a change of the process value compared to the last read value.
  - **Value change**
    Percentage change compared to the last read value from which the "Additional cycle" is used with the configured factor.

Update in sleep mode

- Only with analog input AI0.
  - Deactivated
    The input is read only in the configured update cycle.
  - Activated
    The input is also read during the sleep mode if the value at the input changes (see "Value change"). When AI0 is read, the analog inputs that are configured as counters are read at the same time. With every cycle, the inputs mentioned earlier are read, the program is executed and the outputs are set.
    After reading the outputs of these tags are written, the program is run through and the outputs updated. Note that with this setting, frequently changing signals increase power consumption.

  The difference of the value change as of which an additional update cycle is run through is configured following this.

Format

- **Unit**
- **Format**

See section Configuration of the tags, general parameters (Page 206).

Measuring ranges

The analog inputs have a resolution of 12 bits.

In the presentation of the measuring range, the RTU distinguishes between:

- Nominal range
  Range of the upper calibrated measuring range
- Overshoot range / undershoot range
  Measuring range exceeded / undershot with diagnostics message "INFO"
- Overflow range / underflow range
  Error ranges that cause a diagnostics message "WARNING" for example, if there is a wire break in life zero inputs.

Range	Measuring range (sensor)					Measuring range (percentage)
	0 .. 5 V (unipolar)	0 .. 10 V (unipolar)	0 .. 20 mA (unipolar)	4 .. 20 mA (life zero)	Temperature	
Overflow	≥ 5.25 (max.5.399)	≥ 10.5 (max.10.799)	≥ 21 (max.21.027)	≥ 21 (max.21.027)	≥ 151 °C ≥ 303.8 °F	≥ 105 %
Overshoot range	> 5 .. < 5.25	> 10 .. < 10.5	> 20 .. < 21	> 20 .. < 21	140.1 .. < 151 °C 284.1 .. < 303.8 °F	100.025 .. < 105 %
Nominal range	0 .. 5	0 .. 10	0 .. 20		-80 .. +140 °C -112 .. +284 °F	0 .. 100 %
Nominal range				4 .. 20		20 .. 100 %
Undershoot range	-	-	-	< 4 .. > 1		< 20 .. > 5 %
Undershoot range	-	-	-		-80.1 .. -91 °C -112.1 .. -131.8 °F	-0.025 .. -5 %
Underflow range / wire break	-	-	-	≤ 1		≤ 5 %
Underflow range	-	-	-		≤ -91 °C ≤-131.8 °F	≤ -5 %

6.18.6 Analog memory bits

Note the characters permitted for the input boxes, see section Permitted characters and parameter lengths (Page 116).

Analog memory bits

Parameters

- **Active**
- **Name**
- **Type**
  Assign the tags to one of the following types:
  - Analog value
    The tag type is intended for analog signals.
    Formats of the tags: Floating-point number with sign (32 bits)
  - Counter
    The tag type is intended for counter inputs.
    Formats of the tags: Integer without sign (32 bits)
- **Initial value**
  Optional: Enter an initial value that the tag uses as a basic value.
- **Current value**
  Display of the current value of the tag

- **Read**
  Click on the button to display the current value of the tag.
- **Preset value**
  Optional: You can write the value entered here to the tag.
- **Write**
  Click the button to write current preset value to the tag.

Format

- **Unit**
- **Format**

Logging

See section Configuration of the tags, general parameters (Page 206).

6.18.7 Temperature (Internal)

Note the characters permitted for the input boxes, see section Permitted characters and parameter lengths (Page 116).

Temperature (Internal)

Parameters

- **Active**
- **Name**
- **Temperature unit**
  Select the physical unit for the internal temperature.
- **Current value**
  Display of the value of the tag
- **Read**
  Click on the button to display the current value of the tag.

Update cycle

- **Reduction factor for basic cycle**
  The reduction factor lowers the frequency of the update cycle for this input, the intervals between update cycles increase.
  You configure the basic cycle in "Operating mode.

Diagnostics messages

If the internal temperature of the RTU exceeds a configurable high limit or undershoots a low limit, a message "WARNING" is entered in the diagnostics buffer.

You will find the permitted range for the ambient temperature of the RTU in the section Technical specifications (Page 383).

- **Low limit**
  Enable the option if undershooting a low limit should cause a diagnostics message to be generated. Enter the limit in the input box.
- **High limit**
  Enable the option if exceeding a high limit should cause a diagnostics message to be generated. Enter the limit in the input box.
- **Logging**
  See section Configuration of the tags, general parameters (Page 206).

6.18.8 Power supply (external)

Note the characters permitted for the input boxes, see section Permitted characters and parameter lengths (Page 116).

Power supply (external)

Parameters

- **Active**
- **Name**
- **Current value**
  Display of the value of the tag
- **Read**
  Click on the button to display the current value of the tag.

Update cycle

- **Reduction factor for basic cycle**
  The reduction factor lowers the frequency of the update cycle for this input, the intervals between update cycles increase.
  You configure the basic cycle in "Operating mode.

Diagnostics messages

If the voltage value of the external power supply of the RTU undershoots a configurable minimum permitted value, a message "WARNING" is entered in the diagnostics buffer.

- **Minimum voltage**
  Enable the option if undershooting a low voltage limit should cause a diagnostics message to be generated. Enter the value in the input box.
  The minimum permitted voltage value of the RTU is 10.8 V.
- **Logging**
  See section Configuration of the tags, general parameters (Page 206).

6.18.9 Battery

Note the characters permitted for the input boxes, see section Permitted characters and parameter lengths (Page 116).

You configure the sending of messages if a configurable operating time of the battery is exceeded on the WBM page "Operating mode" > "Power supply".

Battery

Parameters

- **Active**
- **Name**
- **Current value**
  Display of the value of the tag
- **Read**
  Click on the button to display the current value of the tag.

Update cycle

- **Reduction factor for basic cycle**
  The reduction factor lowers the frequency of the update cycle for this input, the intervals between update cycles increase.
  You configure the basic cycle in "Operating mode.
- **Logging**
  See section Configuration of the tags, general parameters (Page 206).

6.18.10 Texts

Note the characters permitted for the input boxes and the syntax of the placeholders, see section Permitted characters and parameter lengths (Page 116).

Texts

Up to 20 texts can be configured.

- **Add**
  Click the button to create a new text tag.
- **Delete**
  First select a text in the table and then click "Delete" to delete this text tag.
  A prompt for confirmation appears:
  - Delete
    Click "Delete" to delete the tag irrevocably.
  - Cancel
    Click "Cancel" if you do not want to delete the tag. The normal view of the WBM page appears again.

Change text

- **Name**
  Name of the tag
- **Text**
  Enter the text here that will be transferred with the message.
- **Number of characters**
  Shows the current number of characters being used in the text.

Notes on the texts

Maximum text length

The text length is limited to 160 characters. Spaces and line breaks count as characters.

If you enter more than 160 characters in the input box, when you save ("Apply") an error message will be output and you need to shorten the text.

Using placeholders for process data

Within a text, you can use up to eight placeholders for current values of tags. In the body of the text of the message, the current values are transferred.

The placeholders of the tags can have a size of up to 64 bytes. If the size is exceeded, the placeholders will not be replaced when sending.

File sizes according to tag type:

File size in bytes	Tag type
1	Digital input, digital output, digital bit memory
4	Analog input (32-bit), counter input
8	Analog input (64-bit)
1 ... 20	Character string depending on number of characters

The placeholders are identified by square brackets.

You can find the placeholders and formatting options in the table in section Permitted characters and parameter lengths (Page 116), under the "Messages" parameter.

SMS: Text length when using the placeholders for process data

With SMS messages, note that the process values can consist of more characters than the placeholders in the configured text.

If the text of the SMS to be sent exceeds the maximum length of 160 characters due to the embedding of process data, the SMS text is truncated after 160 characters and the rest of the text is sent in a second SMS.

Texts for e.mails

With e-mails, the use of text tags for the subject and for the message text is different:

- **Different texts for subject and message text**
  If you want to use different texts for the subject and the message text, and if this is supported by the configurations, you can create two text tags.
  The use of different texts for subject and message text is supported in the following situations:
  - Programming e-mails via program blocks (WBM page "Program" > "Send e-mail")
  - The sending of e-mails with log files (WBM page "Operating mode" > "Logging")
- **Same texts for subject and message text**
  For the following e-mails only one text tag can be used both for the subject and for the message text:
  - Notifications about the operating time of a battery or changing over battery modules (WBM page "Operating mode" > "Power supply")

  Configuration options:
  If after a couple of words you insert a line break (<Enter>) and continue writing in the next line, this has the following effect:
  - In the subject of the e-mail the line break is replaced by a blank.
  - In the message text of the e-mail, the entire text, including the line break is transferred.

6.19 Extension board

General

Activate extension board

Activates the **extension board** of the RTU.

Type

The following type can be selected:

- HART / RS-485

Protocol

The following selection is possible:

- RS-485 – Modbus RTU
  The Modbus-RTU protocol via RS-485 is used.
- HART
  The HART-Multidrop protocol is used.
- Both
  The Modbus-RTU and HART-Multidrop protocols are used at the same time.

The required pages are displayed or hidden in the WBM depending on the selection.

Basic cycle

- Reduction factor
  The reduction factor decreases the frequency of update cycles for the expansion card inputs, the interval of update cycles increases. You configure the basic cycle in "Operating mode".
- Update cycle of this input
  The individually configured update cycle as the product of the basic cycle and reduction factor is displayed
- Enable signal
  You can use the option to limit the reading of the expansion card in the basic cycle in time. Devices can thus only be switched on when required. This reduces the energy consumption of the RTU.
  Reading the measured value is only enabled when the digital signal of a tag is set. You can use the following as the enable signal:
  - Digital input 0..7; digital inputs 0 and 1 must be defined as digital inputs and not as counters
  - All digital outputs
  - All digital bit memory
  - All digital STATUS_Tags

  The digital tag the signal of the expansion card is not read with a value of 0.
  As soon as the value of the tag is set to 1, reading of the signal of the expansion card is enabled. The selected digital tag can be negated via the round symbol.
  Meaning of the drop-down list entries:
  - Signal unused
    The function is disabled for the expansion card. The expansion card is read with each basic cycle.
    If no digital tags are configured, this is the only setting option.
  - Digital tag ...
    From the drop-down list, select the tag that you want to use to enable reading. The check of the enable signal takes place at the beginning of the basic cycle of the expansion card after deduction of the lead time.

  Note: A signal with the entry "Signal not assigned" cannot be negated.

Additional cycle

- Reduction factor
  The reduction factor decreases the frequency of update cycles for the expansion card inputs, the interval of update cycles increases. You configure the additional cycle under "Operating mode".
- Activation signal
  You can use the option set a time limit the reading of the expansion card in the additional cycle. Devices can thus only be switched on when required. This reduces the energy consumption of the RTU.
  Reading the measured value is only enabled when the digital signal of a tag is set. You can use as activation signal:
  - Digital input 0..7; digital inputs 0 and 1 must be defined as digital inputs and not as counters
  - All digital outputs
  - All digital bit memory
  - All digital STATUS_Tags

  The digital tag the signal of the expansion card is not read with a value of 0.
  As soon as the value of the tag is set to 1, reading of the signal of the expansion card is enabled. The selected digital tag can be negated via the round symbol.
  Meaning of the drop-down list entries:
  - Signal unused
    The function is disabled for the expansion card. The expansion card is not read in any additional cycle.
  - Digital tag ...
    From the drop-down list, select the tag that you want to use to enable reading.

You can use this option to reduce or increase the basic cycle and the duration of the update cycle by a factor in certain situations.
You configure the additional cycle under "Operating mode".

The factor is configured independently of the reduction factor for the usual operation ("Reduction factor for basic cycle", see above). As soon as the activation signal is "false", the update is performed only in the basic cycle.

Control output

The settings are used to configure the power supply of the devices on the bus via CTRL output of the extension board.

- Additional bus lead time before update cycle (ms)
  Here, you enter a value (ms) for the time span by which the sensors of the extension board are switched on before the sensor values are read/queried.
  The additional bus lead time is ignored if the following settings are made under "Control output":
  - "Supply CTRL with voltage" disabled
  - "CTRL always active" enabled
- Supply CTRL with voltage
  If this option is enabled, the voltage configured in the menu "Operating mode > Power supply" is applied to CTRL.
  If devices on the RS485 bus supply themselves with voltage, the option can be disabled.
  If the connected HART devices are to be supplied with voltage via the CTRL output, set the output voltage to 24 V in the menu "Operating mode > Power supply > Control outputs".
- CTRL always active
  The CTRL output is also supplied with voltage outside of the update voltage, so also in sleep mode, for example.
- Supply CTRL from battery if external voltage fails
  If the option is enabled, CTRL is supplied from the battery modules if the external power source fails. Note that this can involve a considerable shortening of the battery lifetime. If the option is disabled, no voltage is applied to CTRL if the external power source fails.

6.19.1 RS-485 Modbus

RS485 - Modbus

RS-485

Here, you set the parameters for sending and the frame format.

- **Baud rate [bps]**
  Select the transmission speed:
  - 9600
  - 19200
  - 38400
  - 115200
- **Parity**
  - Even
  - Odd
- **Data bits**
  - 8 (cannot be changed)

- **Stop bits**
  - 1
  - 2
- **Activate fail-safe resistors on the bus**
  If this option is enabled, the internal fail-safe resistors of the RTU are switched on.
  This is only necessary in rare cases, for example when connecting Modbus slaves without galvanic isolation. Note that the power consumption of the RTU increases significantly when this is enabled, especially if the "Bus active in sleep mode" function is enabled at the same time.

Modbus RTU

- **Response monitoring time (ms)**
  Time (ms) within which the RTU expects a response. If the RTU does not receive a response during this time, the frame is repeated as often as entered under "Maximum number of retries". If the RTU still does not receive a response after the maximum number of retries, the reading of this tag is terminated and a diagnostic message is created in the buffer, if it is activated. An attempt is made to continue reading other frames.
  Range of values: 50...3000
- **Maximum number of retries**
  The value determines how often an attempt is made to repeat a frame that has not received a positive answer.
  The Response monitoring time is restarted with each new transmission attempt.
  Range of values: 0...3

Diagnostics alarm

- **Communication error on the bus**
  If the RTU receives no answer or an incorrect answer from the partner within the entered response monitoring time and after expiry of the specified number of retries, the RTU enters a diagnostics message of the "ERROR" class into the diagnostics buffer. The following error identifiers (specified in hexadecimal) are possible:
  - 0x01 - COMM_ERROR_MODBUS_FRAME_BROKEN
  - 0x02 - COMM_ERROR_MODBUS_UART_PARITY_ERROR
  - 0x03 - COMM_ERROR_MODBUS_UART_FRAMING_ERROR
  - 0x04 - COMM_ERROR_MODBUS_UART_NOISE_ERROR
  - 0x05 - COMM_ERROR_MODBUS_UART_OVERFLOW_ERROR
  - 0x06 - COMM_ERROR_MODBUS_CRC_CHECK_FAILED
  - 0x07 - COMM_ERROR_MODBUS_ANSWER_TIMEOUT
  - 0x08 - COMM_ERROR_MODBUS_WRONG_ADDRESS
  - 0x09 - COMM_ERROR_MODBUS_WRONG_FC
  - 0x0A - COMM_ERROR_MODBUS_WRONG_RESPONSE_FORMAT

Modbus TCP

- **Active**
  Activates the Modbus gateway of the RTU. This makes it possible for a master (e.g. SIMATIC PDM) to access the "Modbus RTU"-type field devices connected to the RTU. Field devices can thus be configured and diagnosed remotely via VPN.
  Procedure:
  If this option is selected, requests of the type "Modbus TCP" are translated by the RTU into "Modbus RTU" and forwarded to the connected Modbus RTU field devices. The responses are then converted back into Modbus TCP and sent back to the master.
- **Port number**
  Port number of the Modbus gateway in the RTU. The port can only be reached via the LAN or VPN. Default: 502
- **Enable signal**
  You can use this option to limit access to the connected devices via Modbus TCP.
  You can use the following as the enable signal:
  - Digital input 0..7; digital inputs 0 and 1 must be defined as digital inputs and not as counters
  - All digital outputs
  - All digital bit memory
  - All digital STATUS_Tags
    If the value of the digital tag is 0, access is disabled.
    As soon as the value of the tag set to 1, the function is activated.
    The selected digital tag can be negated via the round symbol.

Meaning of the drop-down list entries:

- **Signal unused**
  The function is permanently activated. If no digital tags are configured, this is the only setting option.
- **Digital tag ...**
  Select the tag you want to use for enabling from the drop-down list.
  Note: A signal with the entry "Signal unused" cannot be negated.

6.19.2 HART

HART

Here you set the following parameters:

- **Primary Master**
  When enabled, the RTU is the primary master and another master can take over the role of the secondary master.
  When disabled, the RTU is the secondary master and another master can take over the role of the primary master.
- **Minimum number of preambles**
  Specifies the minimum preamble number when sending own requests to the RTU.
  - Range of values: 5 ... 20
- **Maximum number of retries**
  Enter the maximum number of times a frame that has not been answered positively is repeated.
  - Value range: 0 ... 7

Diagnostics alarm

- **Communication error on the bus**
  If the RTU receives no response or an incorrect response from the partner, the RTU enters a diagnostic message of the "ERROR" class in the diagnostic buffer. The following error identifiers (specified in hexadecimal) are possible:
  - 0x0B - COMM_ERROR_HART_UART_ERROR
  - 0x0C - COMM_ERROR_HART_CHECKSUM_CHECK_FAILED
  - 0x0D - COMM_ERROR_HART_SLAVE_DETECTED_ERROR
  - 0x0E - COMM_ERROR_HART_WRONG_DELIMITER
  - 0x0F - COMM_ERROR_HART_WRONG_ADDRESS
  - 0x10 - COMM_ERROR_HART_WRONG_COMMAND
  - 0x11 - COMM_ERROR_HART_DEVICE_BUSY
  - 0x12 - COMM_ERROR_HART_DR_IN_PROCESS
  - 0x13 - COMM_ERROR_HART_GAP_TIMEOUT
  - 0x14 - COMM_ERROR_HART_ANSWER_TIMEOUT
  - 0x15 - COMM_ERROR_HART_LINE_FREE_TIMEOUT
  - 0x40 - HART_COMMAND_NOT_IMPLEMENTED

HART-IP

- **Active**
  Activates the Hart gateway in the RTU. This makes it possible for a master (e.g. a SIMATIC PDM) to access the "HART"-type field devices connected to the RTU. HART devices can thus be configured remotely via VPN.
  Procedure:
  If this option is selected, requests of the "HART-IP" type are translated by the RTU into "HART Multidrop" and forwarded to the connected HART field devices. The responses are then converted back to HART IP and sent back to the master.
  The additional port number
  The port number of the HART gateway in the RTU is "20004". If you select this option, the configured port is opened next to the default HART IP port "5094". The ports can only be accessed via the LAN or VPN.
  The RTU supports HART IP via UDP and TCP. The TCP protocol is recommended.
- **Enable signal**
  You can use this option to limit access to the connected devices over time using the HART-IP. You can use the following as the enable signal:
  - Digital input 0..7; digital inputs 0 and 1 must be defined as digital inputs and not as counters
  - All digital outputs
  - All digital bit memory
  - All digital STATUS_Tags

  If the value of the digital tag is 0, access is disabled.
  As soon as the value of the tag set to 1, the function is activated.
  The selected digital tag can be negated via the round symbol.
  Meaning of the drop-down list entries:
  - **Signal unused**
    The function is permanently enabled. If no digital tags are configured, this is the only setting option.
  - **Digital tag ...**
  - Select the tag you want to use for enabling from the drop-down list.
    Note: A signal with the entry "Signal unused" cannot be negated.

Bus polling

Displays the data of the HART field devices on the bus. The data are derived from the data frames and are not complete. To obtain complete and current data, click on the "Start polling" button. The following HART-specific device information is queried and displayed:

- Polling Address
- HART command 0: Unique ID, Revisions (HART / Device / HW / SW)
- HART command 6: Write Polling Address
- HART command 12: Message
- HART command 13: Read Tag, Descriptor
- HART command 20: Long Tag

6.19.3 Devices

In this tab, you define up to 16 slaves, which you connect to the expansion card of the RTU.

- **Active**
  If this option is selected, communication with the device is enabled. You can then create variables for the read data of the device in the next tab.
  Unless it is enabled, the tag will not be processed in productive operation.
  To deactivate tags that are already enabled and integrated in the program, you must first delete the use of the tag in the user program.
- **Device Name**
  Assign a unique name to the devices. The name is required for creating the tags.
- **Device Type**
  Assign the device to one of the following types:
  - Modbus RTU
  - HART

  Depending on the device type, the following parameters are displayed.

Parameters for device type Modbus RTU

RS-485

- **Use different RS-485 settings**
  Enable this option if you use different sensor types and they have no common RS-485 settings. It is recommended to make the same settings for all sensor types.
- **Baud rate [bps]**
  Select the transmission speed:
  - 9600
  - 19200
  - 38400
  - 115200
- **Parity**
  - Even
  - Odd
- **Data bits**
  - 8 (cannot be changed)
- **Stop bits**
  - 1
  - 2

Modbus RTU

- **Slave address (UID)**
  Enter the Modbus address of the device.
  Range of values: 1 ... 247

Parameters for device type HART

HART

- **Polling address**
  Enter the polling address of the device.
  Range of values: 0 ... 63

6.19.4 Tags

Note the characters permitted for the input boxes, see section Permitted characters and parameter lengths (Page 116).

You can configure up to 32 tags. The tag type (Modbus or HART) is automatically determined by the selection of the device and displayed accordingly.

Parameters for device type "Modbus"

- **Active**
- **Name**

- **Device**
  From the list, select the device to which the tag is assigned.
- **Tag type**
  Assign the tags to one of the following types:
  - Digital input
    The tag type is intended for digital signals.
  - Counter input
    The tag type is intended for counter inputs.
    Format of the tags: Integer without sign (32-bit)
  - Analog input (32-bit)
    The tag type is intended for analog signals with a size of 32 bits.
    Format of the tags: Floating-point number (32-bit)
  - Analog input (64-bit)
    The tag type is intended for analog signals with a size of 64 bits.
  - Character string
    The tag type is intended for a string of maximum 20 characters.
  - Digital output
    The tag type is intended for digital signals.
  - Counter output
    The tag type is intended for counter outputs
    Format of the tags: Integer without sign (32-bit)
  - Analog output (32-bit)
    The tag type is intended for analog signals with a size of 32 bits.
    Format of the tags: Floating-point number (32-bit)
  - Analog output (64-bit)
    The tag type is intended for analog signals with a size of 64 bits.

  Note

  Analog input (64-bit)/Analog output (64-bit)

  Signals of the type analog input (64-bit) and analog output (64-bit) can only be logged and transmitted as placeholders. It is not possible to transfer tags of this type with TC/MQTT or process them in the user program.

Modbus

Configure the address and data parameters of the tag here.

- **Slave address (UID)**
  Display of the address of the Modbus slave defined by the device selection (above).
- **Function code**
  Function code according to Modbus specification.
  Digital inputs and digital outputs are supported:
  - 0x01 – Read Coils
  - 0x02 – Read Discrete Inputs
  - 0x05 – Write Single Coil

  The RTU only processes one bit at a time.
  Supported for counter inputs, analog inputs, counter outputs and analog outputs:
  - 0x03 – Read Holding Registers
  - 0x04 – Read Input Registers
  - 0x06 - Write Single Register
  - 0x10 – Write Multiple Registers

  You select the size and interpretation (16, 32 or 64 bits) via the "Data type - Endianness" drop-down list.
- **Data start address**
  Here, you configure the coil or register address in your Modbus slave.
  The address to be read corresponds to the value "Data start address" + 1.
  Refer to the descriptions of your connected sensors for the addresses.
  Enter the address in decimal or hexadecimal form. The corresponding value is displayed in the other format.
  Value range (hex): 0x0000 .. 0xFFFF
- **Data type - Endianness**
  Use the drop-down list to specify how the RTU interprets the I/O and process values of counters and analog values.
  The RTU always stores the two bytes of a word in the Big Endian format according to the Modbus specification.
  - Example:
    The two bytes of a word are numbered as follows: | 1 | 0 |
    The higher byte 1 is stored first (Big Endian).

1. The following options are available depending on the selected function code and tag type:
   - Signed 16-bit value
   - Unsigned 16-bit value
   - Signed 32-bit value HW – LW
     First High Word, then Low Word (Big Endian)
   - Signed 32-bit value LW – HW
     First Low Word, then High Word (Little Endian)
   - Unsigned 32-bit value HW – LW
     First High Word, then Low Word (Big Endian)
   - Unsigned 32-bit value LW – HW
     First Low Word, then High Word (Little Endian)
   - Floating-point number (32-bit) HW – LW
     First High Word, then Low Word (Big Endian)
   - Floating-point number (32-bit) LW – HW
     First Low Word, then High Word (Little Endian)
   - Floating-point number (64-bit) HW – LW
     First High-High Word, then High-Low Word, then Low-High Word and then Low-Low Word (Big Endian)
   - Floating-point number (64-bit) LW – HW
     First Low-Low Word, then Low-High Word, then High-Low Word and then High-High Word (Little Endian)

Note

Endianess

Note possible casting combinations between process value and I/O value, depending on the data type and endianess setting of the tag.

Example: The process value 70000 of a 32-bit analog output is truncated with a selected endianess "Signed 16-bit value" and transmitted as I/O value 4464

- **Data type – TotalType**
  Data type defined by Siemens which is used primarily for counter values.
  TotalType consists of two parts:
  - Long number with sign – contains the integer part of the value (32 bits)
  - Long decimal number with sign – contains the fraction part of the value multiplied by 1.0E9 (32 bits)

  Note

  Use of TotalType

  If the data type TotalType is used with a tag of the type analog input (32 bits), the RTU reads both parts of the frame, converts them into a 64-bit double and is then casted to 32 bits for further processing in the user program or in Telecontrol.

- **Number of characters** (only for "String" tag type)
  Length of the registers to be read, from which the string is formed. Range of values: 1-20
- **Current value**
  Display of the value of the input
- **Current I/O value**
  Display of the value of the signal.
- **Current process value**
  Not displayed for tag type "Digital input".
  Display of the converted process value, which is calculated from the I/O value after the measuring range has been defined (see below).
- **Read**
  Click on the button to display the current value of the input.

The following parameters are only displayed for the tag types "Digital output", "Counter output", "Analog output (32-bit)", "Analog output (64-bit)".

- **Preset value**
  Optional: You can write the entered value to the tag.
- **Write even without change**
  If this option is selected, the output is transmitted cyclically to the Modbus device with the current value, even if no value change has occurred.

  Note

  Modbus output tags are transferred with the quality "BAD" after a restart / initial configuration and are not used as program inputs. The output is only used and transmitted with the quality "GOOD" after the output value has been set for the first time via TeleControl, a program module or manual value input in the WBM.

Parameters for device type "HART"

- **Active**
- **Name**

- **Device**
  From the list, select the device to which the tag is assigned.
- **Tag type**
  - Analog input
    The tag type is intended for analog signals

HART

- HART variable
  Select the variable you want to use:
  - PV: Primary variable = Main variable
  - PV Loop Current: Current in mA
  - PV Percent Range: Percentage of the range of the main variable
  - SV: Secondary variable = 1st Auxiliary variable
  - TV: Tertiary variable = 2nd Auxiliary variable
  - QV: Quaternary variable = 3rd Auxiliary variable
  - Device Variable: Up to eight different variables

  Only for SITRANS LUT400 devices
  The following variables only apply in conjunction with SITRANS LUT400 devices. They are read out with the LUT device-specific HART command "252" and written into the process image of the RTU. Other devices do not support the command or use the HART command "252" for other purposes.
  - LUT400 Daily Totalizer
  - LUT400 Actual Totalizer
- **Current I/O value**
  Display of the value of the input signal.
- **Current process value**
  Display of the converted process value, which is calculated from the I/O value after the measuring range has been defined (see below).
- **Read**
  Click the button to display the current value of the input from the process image of the RTU.

HART variable polling

By clicking the "Read" button, the previously selected HART device is queried directly (not from the process image) for all variables supported by the RTU. The displayed data helps to select the correct variable for the RTU process image. The following are read out:

- PV Loop Current
- PV Percent Range
- PV, SV
- TV, QV
- Device variable 1 ... 8

Specification of the measuring range (for device type "HART" and "Modbus")

To specify the measuring range enter the lower interpolation point (interpolation point 1) and the upper interpolation point (interpolation point 2) for the input signal (I/O value) and the corresponding physical value (process value).

- **I/O value (interpolation point 1)**
  Low value of the input signal
- **Process value (interpolation point 1)**
  Corresponding low value of the physical value
- **I/O value (interpolation point 2)**
  High value of the input signal
- **Process value (interpolation point 2)**
  Corresponding high value of the physical value
- **Process value, range**
  Displays the configured process value range

Save/send as part of the process image

If you select the option, the current value for the selected tag is applied when downloading / sending the process image.

Note

Tags from expansion cards

Tags with a total size of up to 384 bytes can be logged and/or saved as part of the process image.

The size is determined by a consistency check.

File sizes according to tag type:

File size in bytes	Tag type
1	Digital input, digital output
4	Analog input (32-bit), counter input, analog output (32-bit), counter output
8	Analog input (64-bit), analog output (64-bit)
1 ... 20	Character string depending on number of characters

Logging

Format

See section Configuration of the tags, general parameters (Page 206).

6.20 GPS (RTU30x1C)

6.20.1 General

You configure the GPS functionality of the RTU here.

Activating GPS

Enable the option "Active" to enable the communication between the RTU and its communications partner via GPS.

Result:

- Time synchronization via GPS can be activated under "System > System Time". See section System time (Page 137).

Update cycle

- **Reduction factor for basic cycle**
  The reduction factor lowers the update cycle for this input. With a factor of 2, for example, the update cycle of this input is halved: The input is read only half as often as configured in the basic cycle.
  The reduction factor lowers the frequency of the update cycle for this input. The interval between the update cycles is therefore increased.
  You configure the basic cycle in "Operating mode > Update cycle".
  If the "GPS always active" parameter is not enabled, a cycle time of at least 100 s must be set as the lead time for cyclic GPS.
- **GPS always active**
  The GPS functionality of the RTU is always activated, even when the RTU is in "sleep mode". This is advantageous, for example, when GPS data should be read frequently, because the lead time is reduced or completely omitted.
- **Supply GPS from battery if external voltage fails**
  Requirement:
  For the option to be active, power supply must be configured by means of "External Power Supply" and "Battery Module". See section Power supply (Page 197).
  The GPS functionality can thus be "shedded" (load shedding) if emergency operation without GPS is sufficient with external supply and battery (e.g. if only reachability needs to be guaranteed).

6.20.2 Tags

Note the characters permitted for the input boxes, see section Permitted characters and parameter lengths (Page 116).

Tags

Parameters

- Active
- Type
  The tag type is assigned permanently to an index:
  - Index 0: Latitude
  - Index 1: Longitude
  - Index 2: Altitude (m)
  - Index 3: Visible satellites
    The tag type is intended for counter inputs. Formats of the tags: Integer without sign (32 bits).
  - Index 4: Time of last position
    The tag specifies the age of the position in 100 ms.
    The tag type is intended for counter inputs. Formats of the tags: Integer without sign (32 bits).
- Name
- Current value
  Display of the value of the tag
- Read
  Click on the button to display the current value of the tag.
- Logging
  See section Configuration of the tags, general parameters (Page 206).

6.21 Program

6.21.1 Creating the user program using program blocks

Creating the program using program blocks

For the control tasks of the RTU, you will find prewritten program blocks that you can create and program here in the WBM in up to 8 networks.

For a description of the blocks, refer to the section Program blocks (Page 285).

6.21.2 Library

To save memory space, you can define up to 8 script blocks on the "Library" page, which you can call up as required in the "Script" program block using the "INCLUDE" command.

Note

Memory space requirements

tScript blocks saved in the library occupy part of the total memory (1284 bytes) available for all instances of the "Script" block. If the memory capacity is exceeded, an error message is displayed.

Creating script blocks

- **Name**
  Assign a name for the script block. This name is used to call the script block in the program block.
- **Script**
  Enter the content of the script in this field.
- **Apply**
  The script entered is saved in the library.

See also

Script (Page 366)

6.22 Telecontrol and MQTT

6.22.1 Overview

Overview

The Overview displays the most important parameters of communication with the partner and statistical data on the send buffer of the RTU.

Connection status

The following information is shown:

- **Protocol type**
  Protocol used for the connection to the communication partner in the master station or cloud
- **Connection to TCSB** or **Connection to the master station / to the master / broker**
  Indicates whether a connection to the communication partner exists.
- **Connection exists to the master PLC**
  Only for ST7: Indicates whether or not a connection is established to the CPU of the master station TIM.

- **Address of the telecontrol server** or **Address of the master station / master / broker**
  Configured IP address or host name of the communication partner in the master station or cloud.
- **Connected since (dd:hh:mm:ss)**
  Duration of the existing connection to the communication partner.
- Only for IEC 60870-5-104 or DNP3 and enabled redundancy:
  - **Connection to the master station (redundant)**
    Indicates whether a connection to the communication partner exists.
  - **Address of the master station (redundant)**
    Configured IP address of the communication partner in the master station.
- Only with ST7 and enabled second ST7 connection:
  All parameters are present a second time for the second, independent ST7 connection.

Send buffer

Here, data on the memory occupation of the send buffer (frame memory) of the RTU is displayed.

The values of tags configured as an event are saved in the send buffer. You specify whether the values of a tag are transferred as event on the page "TeleControl" > "Data points" with the "Type of transfer".

- **Send buffer - current level**
  Current fill level of the send buffer
- **Send buffer - average level**
  Average fill level of the send buffer over the last 16 communication cycles
  Data transferred by events is not taken into account here
- **Send buffer - highest level**
  Highest fill level of the send buffer reached since the last startup of the RTU.
- **Number of lost send frames**
  Number of data frames that due to connection disruptions or a full send buffer could not be sent since the last startup of the RTU.

Receive statistics

- Number of data frames that were received since the last startup of the RTU or reset of the statistics but could not be evaluated without errors. You can find details on the errors that occurred in the diagnostic buffer, see section Error detections for Telecontrol, e-mails and FTP (Page 375).

Reset statistics

- Resets all the counters on this page to zero.

6.22.2 Protocol-specific connection parameters

6.22.2.1 TeleControl Basic

Here you configure the data of the communications partner of the RTU (telecontrol server) and the transfer settings for connection establishment.

Parameters

The following data needs to be configured:

- **Active**
  Activate the option to enable the communication between the RTU and its communication partner.
- **IP address or DNS name of the telecontrol server**
  IP address or host name of the communications partner in the master station
- **Interface**
  Selection of the interface for the telecontrol communication:
  - LAN
    If LAN or WAN (mobile wireless) is selected, the data is encrypted using the mechanism of the telecontrol protocol.
  - WAN
  - VPN 1 / VPN 2
    If VPN is selected, the data is not encrypted using the mechanism of the telecontrol protocol but by VPN mechanisms.
    If after the VPN tunnel, the connection continues via routers and further links, make sure that the data is protected by suitable measures, e.g. by security modules SCALANCE S/M.
- **Port number**
  IPT listener port of TCSB
  Range of values: 1024 .. 65535
  With TCSB the port number 55097 is preset but can be changed.
- **Project number**
  Number of the TCSB project
  Range of values: 1 .. 2000
- **Station number**
  Number of the connection in TCSB
  Range of values: 1 .. 8000
  Range of values in TCSB: 1...8000 (throughout the entire TCSB system)
  With connections between different RTUs and TCSB, the station number within a project must be different for every RTU.
- **Telecontrol password**
  Password for authentication of the RTU with TCSB. Is configured in TCSB for every station.
  Rules: 8 .. 29 characters from the ASCII character set 0x20.. 0x7E
- **Allow HTTP/S access via TeleControl Basic**
  Enabling the option makes it possible to establish a connection from a PC to the Web server of the RTU via HTTP/S and the TeleControl Basic tunnel. The connection depends on the settings for HTTPS in "Security".

Transmission settings

A connection establishment for example via the mobile wireless network can take several seconds. This depends on the particular network, on the current network load and on any maintenance work of the network provider.

If the telecontrol server is unreachable, the RTU repeats its attempts to establish a connection to the telecontrol server.

- **Connection establishment delay**
  The parameter decides the intervals between attempts to establish the connection if the partner is unreachable. The parameter is set permanently to 10 seconds. This value counts as a basic value for the waiting time before the next connection establishment attempt. The number of connection establishment attempts depends on the parameter "Always connected" that is configured in the settings of the operating mode.
  - Parameter "Always connected" enabled
    Starting at the basic value of 10 seconds, the current waiting time is doubled after every 3 unsuccessful retries up to a maximum value of 900 s.
    This results in the following waiting times for connection establishment attempts:
    Three times 10 s
    Three times 20 s
    Three times 40 s
    Three times 80 s
    etc. up to max. 900 s
  - Parameter "Always connected" disabled
    If the option "Always connected" is disabled, a maximum of three attempts to establish a connection with a fixed waiting time of 10 seconds are performed within a communication cycle.
- **Send timeout**
  Time for the arrival of the acknowledgment from the communications partner (telecontrol server) after sending spontaneous data. The time is started after sending a spontaneous data frame. If no acknowledgement has been received from the partner when the connection monitoring time elapses, the data frame is repeated up to three times. After three unsuccessful attempts, the connection is terminated and re-established.
  The parameter is set permanently to 30 seconds.
- **Key exchange interval**
  This is the interval in hours after which the key is exchanged again between the RTU and the communications partner (TCSB). The key is a security function of the protocol "TeleControl Basic" used by the RTU and TCSB.
  The parameter is set permanently to 1 hour.

- **Discard events as long as the time of day is invalid**
  If the option is enabled the values of data points configured as an event will be discarded until the time of day of the RTU is synchronized or set.
  This may be the case, for example, during startup of the RTU.
- **Do not start communication mode if send buffer is full**
  - Enabled: If new data points are entered in the overflowed event buffer, no change to communication mode takes place. A transfer attempt only takes place in time for the next planned communication mode.
  - Disabled: If new data points are entered in the overflowed event buffer, communication mode starts.
    Note: This can result in high power consumption in battery-operated stations.

6.22.2.2 ST7 und ST7-Backup

Requirement

For communication with the partner, a substitute must be configured for the RTU in the STEP 7 project; see section Configuration (STEP 7) (Page 283).

ST7-Backup

You can create an ST7 connection and an independent, redundant ST7 connection. ST7 and ST7-Backup have the same setting options.

With an active ST7-Backup, the possible event buffer is halved and the data points are sent automatically to both TIM control centers.

The transmission protocol MSCsec

When using the telecontrol protocol SINAUT ST7, the RTU always uses the secure transmission protocol "MSCsec". MSCsec supports authentication of the communications partners with a user name and password and data encryption. In addition to this, the shared automatically generated key is renewed between the communications partners at a configurable key exchange interval.

Parameters

Here you configure the address data of the RTU, of the communications partner of the RTU and the transfer settings.

The following data needs to be configured:

- **Active**
  Activate the option to enable the communication between the RTU and its communication partner.
- **Interface**
  Selection of the interface for the telecontrol communication:
  - LAN
  - WAN
  - VPN 1
  - VPN 2

  The data is always encrypted by the mechanism of the "MSCsec" protocol.

  Note

  Restrictions relating to establishing connections

  When ST7 and ST7-Backup are used, only the following combinations are possible for establishing connections:
  - 2x WAN
  - 2x VPN
  - 1x LAN + 1x VPN

- **IP address or URL of the master station TIM**
  IP address or URL of the communications partner (TIM)
- **MSC port of the TIM**
  MSC port of the master station TIM or of the router of the master station
  (can be configured in the master station: 1024 .. 65535; standard port: 26382)
- **Subscriber number master station TIM**
  Subscriber number of the communications partner (TIM)
- **Subscriber number master station CPU**
  Subscriber number of the CPU of the communications partner
- **Own subscriber number (RTU)**
  RTU's own subscriber number
- **Subscriber number of the CPU (RTU)**
  Even if the RTU does not have a separate CPU, this information is required for connection configuration at the partner. Enter the value of an as yet unused subscriber number.
- **User name**
  MSC user name for identification of the RTU by the MSC master station
  A different user name must be configured for each MSC station.
- **Password**
  MSC password for identification of the RTU by the MSC master station

Master uses local time

The time received from the master is interpreted as local time and applied depending on the settings of the RTU for daylight saving / standard time. In daylight-saving time, the RTU sends the data points stamped with standard time, i.e. with 1 hour offset to the master. If

this option is enabled, the setting for daylight saving / standard time changeover must be the same as the master TIM. If this option is enabled and no daylight saving / standard time is set on the RTU, the daylight saving time of the TIM is set back by one hour.

If this option is disabled, the master sends the time frames in UTC format. The RTU interprets the time as UTC and sets the local time according to the settings under the system time.

Transmission settings

A connection establishment for example via the mobile wireless network can take several seconds. This depends on the particular network, on the current network load and on any maintenance work of the network provider.

If the telecontrol server is unreachable, the RTU repeats its attempts to establish a connection to the telecontrol server.

- **Key exchange interval**
  Interval in hours after which the key is exchanged again between the RTU and the communications partner. The key is a security function of the transmission protocol "MSCsec".
  The parameter has a default value of 1 hour.
- **Discard events as long as the time of day is invalid.**
  If the option is enabled the values of data points configured as an event will be discarded until the time of day of the RTU is synchronized or set.
  This may be the case, for example, during startup of the RTU.
- **Do not start communication mode if send buffer is full**
  - Enabled: If new data points are entered in the overflowed event buffer, no change to communication mode takes place. A transfer attempt only takes place in time for the next planned communication mode.
  - Disabled: If new data points are entered in the overflowed event buffer, communication mode starts.
    Note: This can result in high power consumption in battery-operated stations.

6.22.2.3 DNP3

Requirement

For communication with the partner, a substitute must be configured for the RTU in the STEP 7 project; see section Configuration (STEP 7) (Page 283).

Parameters

Here you configure the data of the communication partner (master) and the transfer settings for connection establishment.

- **Active**
  Activate the option to enable the communication between the RTU and its communication partner.
- **IP address master station**
  IP address of the master
  If you configure "0.0.0.0" the RTU accepts a master with any IP address.

- **IP address master station (alternative)**
  If there is a second master: IP address of the second master
  If the address of the master is configured with "0.0.0.0", the address of the second master must also be configured with "0.0.0.0".
  Enable or disable redundancy
  Redundancy is enabled if both addresses are not configured with "0.0.0.0". Redundancy is disabled if both addresses or the second address is configured with "0.0.0.0".
- **Port number**
  Number of the listener port of the RTU
  Range of values: 1024 .. 65535, default: 20000
- **Station address**
  Outstation number of the RTU
  Range of values: 0 .. 65519
- **Master station address**
  Station address of the master
  Range of values: 0 .. 65519
- **Interface**
  Selection of the interface for the telecontrol communication:

  Note

  Protection against access by third parties

  When using the WAN interface, make sure that the mobile wireless network is protected against third-party access, for example by using a private APN.

  – LAN
  – WAN
  – VPN 1
  – VPN 2
- **IP protocol**
  Selection of the transport protocol:
  – TCP/UDP
    Allows operation both with TCP and UDP. Not available when "WAN" is selected.
  – Only UDP
  – TCP only
- **Partner monitoring time (seconds)**
  If the RTU does not receive a sign of life from the master within the configured time, it interprets this as a disruption of the master. The RTU aborts the connection and attempts to re-establish it.
- **Reconnection cycle of the partner (seconds)**
  In cyclic and spontaneous communication cycles, the RTU waits for the configured time for incoming connections of the master. If no connection status of the master is received within the configured time, the RTU terminates the communication cycle.
  Range of values: 10 .. 180 s, default: 10 s

Save values acc. to event classes

- **Class 1 / Class 2 / Class 3**
  Here you specify how the values of data points assigned as an event of class 1, 2 or 3 are saved.
  The following options are available for each of the three classes:
  - All values chronological
    Every value change is saved chronologically in the send buffer.
  - Only current value
    Only the current value at the time the tag is read is saved in the send buffer and overwrites the last saved value there.

  You configure the data points as an event of a specific class on the WBM page Data points (Page 261).

Send buffer

- **Class 1 / Class 2 / Class 3**
  Here, you specify for each of the three event classes the maximum number of events that can be stored in the send buffer before they are sent to the communication partner.
  Range of values: 0 .. 255
  If you enter zero, the function is deactivated for the relevant class. As many events can be stored for the class as the overall size of the send buffer or a configured Delay time for events allows.
  Note the overall size of the send buffer, refer to the section Performance data (Page 46).

Delay time for events

- **Class 1 / Class 2 / Class 3**
  Here, for each of the three event classes you specify the maximum time the events can be stored in the send buffer before they are sent to the communication partner. Time in seconds.
  If you enter zero, the function is deactivated for the relevant class. As many events can be stored for the class as the overall size of the send buffer or a configured buffer for events allows.

If the value zero is set for the buffer for events and for the delay time for events, both functions are disabled and no events are transferred unsolicited.

Other parameters

- **DNP3 level**
  Specifies the DNP3 conformity level supported by the master (DNP3 Application Layer Protocol Level)
  - Level 2
  - Extended

  The RTU supports level 2 and other functions that go beyond DNP3 conformity level 2.
- **Max. time between Select and Operate**
  Max. duration (seconds) between Select and Operate. For a Select command to be transferred to the controller and to take effect, no other command may be sent to the station between Select and Operate.
  Range of values: 1..65535
  If the RTU receives two commands within the configured time period, both commands are ignored.

- **Connection confirmation**
  Condition for the RTU to request a connection confirmation from the master (never, always, only with segmented data frames).
- **Frame repetitions**
  Number of frame repetitions at the Data Link Layer if no acknowledgement is received from the master. Permitted range: 0 ... 65535
  If you enter 0 (zero), the function is disabled.
- **Connection monitoring time**
  Time (in seconds) within which an acknowledgement is expected from the master.
  Permitted range: 0 .. 65535
  If you enter 0 (zero), the function is disabled.
- **Max. number of spontaneous frames**
  Maximum number of repetitions of spontaneous data frames if no acknowledgement is received from the communication partner.
  Range of values: 0 .. 255
- **Monitoring time for spontaneous frames**
  Time (in seconds) within which an acknowledgement of spontaneous data frames is expected from the master.
  Range of values: 1 .. 65535
- **Event transmission mode**
  Mode with which DNP events are transferred to the communication partner.
  - Block transfer
    Transfer of collected data per data point as a block
  - Single transfer
    Chronological transfer of individual data frames
- **Discard events as long as the time of day is invalid.**
  If the option is enabled the values of data points configured as an event will be discarded until the time of day of the RTU is synchronized or set. This may be the case, for example, during startup of the RTU.
- **Do not start communication mode if send buffer is full**
  - Enabled: If new data points are entered in the overflowed event buffer, no change to communication mode takes place. A transfer attempt only takes place in time for the next planned communication mode.
  - Disabled: If new data points are entered in the overflowed event buffer, communication mode starts.
    Note: This can result in high power consumption in battery-operated stations.

DNP3 SA

Here, you can enable and configure secure authentication according to the DNP3 specification.

- **Activate Secure Authentication**
  Enable the option if you want to use the secure authentication.
- **IKE mode**
  Selection of the mode for key exchange. Range of values:
  - Main Mode
    The Main Mode is the standard mode.
  - Aggressive Mode
    The Aggressive Mode is somewhat faster but transfers the identity unencrypted.

  Default setting: Aggressive Mode
- **SHA-1**
  Setting to select whether the RTU may use the secure hash algorithm SHA-1 if "SHA-256" was configured as the Secure hash algorithm and the master does not support SHA-256 .
  Range of values:
  - SHA-1 not allowed
    The RTU may not use SHA-1. If the master does not support SHA-256, no connection will be established.
  - SHA-1 allowed
    The RTU can use SHA-1 if the master does not support SHA-256.

  Note: SHA-1 is no longer considered secure and is currently only supported for reasons of compatibility.
  Default setting: SHA-1 not allowed
- **Hash method**
  Selection of the Secure Hash Algorithm (SHA)
  Range of values:
  - SHA-1
  - SHA-256

  Default setting: SHA-256
- **Key wrap method**
  Selection of the Advanced Encryption Standard (AES)
  Range of values:
  - AES-128
  - AES-256

  Default setting: AES-128
- **Key length**
  Specifies the length of the pre-shared key in bytes.
  The following lengths are pre-selected depending on the configured key wrap algorithm:
  - For AES-128: 16
  - For AES-256: 32

- **Max. number of key exchange requests**
  If the configured number of statistics queries of the master is exceeded within the key exchange interval, the RTU enters a message in the diagnostics buffer.
  Range of values: 2 .. 255, default: 5
- **Authentication requests before key exchange**
  Maximum number of authentication requests of the RTU with the master. When this number is reached, the session key is renewed.
  Range of values: 1 .. 10000, default: 1000
  Recommendation: Set the number for the RTU twice as high as for the master.
- **Key exchange interval (min)**
  Period after which the key is exchanged again between the RTU and the master. The interval must be matched up on both communication partners.
  Range of values: 0 .. 65535 min. at 0 (zero), the key is never changed (function disabled).
  Default setting: 15 min.
  Recommendation: Set the key exchange interval for the RTU twice as high as for the master.
- **Key exchange monitoring time**
  Maximum waiting time for the response from the master to an authentication request of the RTU.
  Exceeding the waiting time is evaluated as an error by the RTU. In this case, the RTU generates a security event and sends this to the master.
  Range of values: 1 .. 65535 s, default: 5
- **Import key file**
  The pre-shared key can either be imported as a file or configured manually.
  The output box displays the name of the last imported key file.
  Import the pre-shared key from the file system of the configuration PC if the key was generated by the master or another system.
  Import the key into the RTU with the "Import" button.
- **Pre-shared key**
  Here you can configure the pre-shared key manually. Enter the pre-shared key as hexadecimal values.
  The pre-shared key of the RTU must be identical to the pre-shared key of the master.

6.22.2.4 IEC 60870-5-104

Requirement

For communication with the partner, a substitute must be configured for the RTU in the STEP 7 project; see section Configuration (STEP 7) (Page 283).

Parameters

Here you configure the data of the communication partner of the RTU (master) and the transfer settings for connection establishment.

The following data needs to be configured:

- **Active**
  Activate the option to enable the communication between the RTU and its communication partner.
- **IP address master station**
  IP address of the master
  If you configure "0.0.0.0" the RTU accepts a master with any IP address.
- **IP address master station (alternative)**
  If there is a second master: IP address of the second master
  If the address of the first master is configured with 0.0.0.0, the address of the second master must also be configured with 0.0.0.0.
  Enable or disable redundancy
  Redundancy is enabled if both addresses are not configured with "0.0.0.0".
  Redundancy is disabled if both addresses or the second address is configured with "0.0.0.0".
- **Port number**
  Number of the listener port of the RTU
  Range of values: 0 .. 65535
  Default setting: 2404
- **Common ASDU address**
  Station address of the RTU
- **Interface**
  Selection of the interface for the telecontrol communication:

  Note

  Protection against access by third parties

  When using the WAN interface, make sure that the mobile wireless network is protected against third-party access, for example by using a private APN.

  – LAN
  – WAN
  – VPN 1
  – VPN 2

Master uses local time

If this option is enabled, the time of the master is interpreted as local time. Time zone settings within the RTU are ignored. The received time is checked for daylight saving / standard time according to RTU settings and the events are stamped accordingly. If this option is enabled, the setting of the master for daylight saving / standard time changeover must be the same as on the RTU.

If this option is disabled, the IEC master sends the time frames in UTC format. The RTU interprets the time as UTC and sets the local time according to the settings under the system time. The data points are sent with UTC time stamps and stamped as local standard time.

Transmission settings

Note

Settings on the master

When configuring the monitoring times t_1 and t_2 make sure that you make the corresponding settings on the master so that there are no unwanted error messages or connection aborts.

- **Reconnection cycle of the partner (seconds)**
  In cyclic and spontaneous communication cycles, the RTU waits for the configured time for incoming connections of the master. If no connection status of the master is received within the configured time, the RTU terminates the communication cycle.
  Range of values: 10 .. 180 s
  Default setting: 10 s
- **t_1**
  Frame monitoring time
  Monitoring time for the acknowledgement of data sent by the RTU by the master. The monitoring time applies to all data sent by the RTU in I, S and U format.
  If the partner does not send an acknowledgment during the monitoring time, the RTU terminates the connection to the partner.
  Range of values: 1 .. 65535 s
  Default setting: 15 s
- **t_2**
  Monitoring time for S and U frames
  Monitoring time for the acknowledgment of data frames of the master by the RTU
  After receiving data from the master, the RTU acknowledges the received data as follows:
  - If the RTU sends data to the master itself within t_2, it acknowledges the data received from the master during t_2 at the same time along with the sent data frame (I format).
  - The RTU sends an acknowledgment frame (S format) to the master of the latest when t_2 elapses.

  Range of values: 0 .. 65535 s
  Default setting: 10 s
  If you enter 0 (zero), the function is deactivated.
  The value of t_2 must be less than that of t_1.

  Note

  Values for the frame monitoring time and monitoring time for S and U frames

  With a high encryption depth of the VPN connection higher values for t_1 - t_2 (e.g. 60 s) may be necessary if the communication mode "Always remain connected" is configured.

- **t_3**
  Idle time for test frames
  Monitoring time during which the RTU has not received any data from the master. This parameter is intended for situations in which longer idle periods occur; in other words, times when there is no data traffic.
  When t_3 elapses, the RTU sends a test/control frame (U format) to the master and enters a message in its diagnostics buffer.
  Range of values: 0 .. 65535 s
  Default setting: 30 s
  If you enter 0 (zero), the function is deactivated.
  The value of t_3 should be higher than that of t_1.
- **w**
  Maximum number of received data frames (I-APDUs), after which the oldest received data frame must be acknowledged.
  Range of values: 1 .. 65535
  Default setting: 8
- **k**
  Maximum number of unacknowledged data frames (I-APDUs)
  If k is reached and t_1 has not yet elapsed, the RTU does not send any data until all sent data has been acknowledged by the master.
  When k is reached and t_1 has elapsed, the TCP connection is terminated.
  Range of values: 1 .. 12
  Default setting: 12
- **Discard events as long as the time of day is invalid.**
  If the option is enabled the values of data points configured as an event will be discarded until the time of day of the RTU is synchronized or set.
  This may be the case, for example, during startup of the RTU.
- **Do not start communication mode if send buffer is full**
  - Enabled: If new data points are entered in the overflowed event buffer, no change to communication mode takes place. A transfer attempt only takes place in time for the next planned communication mode.
  - Disabled: If new data points are entered in the overflowed event buffer, communication mode starts.
    Note: This can result in high power consumption in battery-operated stations.

Acknowledgment

Mechanism:

With each sent data frame, the RTU sends a continuous send sequence number. The data frame remains initially stored in the send buffer.

When it receives the data frame, the master sends the send sequence number from this or (if several data frames are received) the last data frame as an acknowledgment to the RTU. The RTU saves the send sequence number returned by the master as a receive sequence number and uses it as an acknowledgement.

Data frames whose send sequence number is equal to or lower than the current receive sequence number are evaluated as having been successfully transferred and are deleted from the send buffer of the RTU.

Recommendations of the specification:

w should not be higher than 2/3 of k.

Recommended value for k: 12

Recommended value for w: 8

6.22.2.5 MQTT

Here you configure the data of the communication partner of the RTU (MQTT-Broker) and the transfer settings for connection establishment.

Parameters

- **Active**
  Enables the communication between the RTU and the MQTT broker.
- **Broker address**
  Enter the IP address or the host name of the broker. You receive the data from your service provider.
- **Interface**
  Interface for the MQTT communication.
  - LAN
  - WAN
  - VPN 1
  - VPN 2
- **Port number**
  Enter the port number of the broker. Default: 8883.
- **Client ID**
  Enter the client ID of the RTU that was assigned by your service provider or that you defined.
- **Keepalive monitoring time (s)**
  Assign a value for monitoring the connection to the broker (seconds). If no further data on transmission to the broker is pending within the configured time after the data is sent, the device sends a keep-alive frame to the broker.
  Permitted range: 0 or 5...65535
  In case of 0 (zero), no keep-alive frames are sent to the broker. Default setting: 10
- **Clean session**
  - When enabled, the session information is deleted when the connection is terminated.
  - When disabled, the session information is retained when the connection is terminated.
- **Enable authentication**
  - When enabled, the connection is set up with an authentication using user name and password.
  - When disabled, the connection is set up anonymously.

  If possible, use TLS to transmit the user name and password.

- **User name**
  Enter the user name that was assigned by your service provider or that you defined.
- **Password**
  Enter the password that was assigned by your service provider or that you defined.
- **Topic prefix**
  The prefix entered here applies to all topics and changes have an effect on all topics. All topics will be given the configured prefix.
- **Topic suffix**
  The entered suffix applies to all topics of the type "Publish" and "Last will". Changes have an effect on all topics of this type. All configured topic names will have the configured suffix. Topics of the type "Subscribe" do not use the configured suffix.

You will find more information on the structure of topic names in the section Topics (only MQTT) (Page 272).

- **Secure connection with TLS**
  - When enabled, the data is transferred using the secure TLS 1.2 method.
  - When disabled, the data is transferred unencrypted.
- **Authenticate broker**
  When enabled, you must load a CA certificate to the RTU.
  With secure connection via TLS, the authenticity of the broker is verified using its published certificate or its certificate chain.

CA certificate

Configure the CA certificate or intermediate certificate of the broker or its individual server certificate.

- **Currently used file**
  Shows the name of the certificate file currently being used by the RTU.
- **Delete**
  Deleting the currently used file. Click the "Apply" button to delete the file.
- **File used after applying**
  Shows the name of the last certificate file to be loaded on the RTU (on clicking the "Load on device" button).
- **Load new file**
  Shows the file name of the certificate file that you have loaded using the "Search" button.
- **Browse**
  Select a certificate file saved on the configuration PC that is to be loaded on the RTU.
- **Load on device**
  Click the button to load the selected file on the RTU.
- **Authenticate RTU**
  When enabled, you must load a certificate and the associated key on the RTU.
  With secure connection via TLS, the authenticity of the RTU is proven to the broker using its own certificate / key pair.

Own certificate

Configure the certificate or the certificate chain of the RTU.

- **Currently used file**
  Shows the name of the certificate file currently being used by the RTU.
- **Delete**
  Deleting the currently used file. Click the "Apply" button to delete the file.
- **File used after applying**
  Shows the name of the last certificate file to be loaded on the RTU (on clicking the "Load on device" button).
- **Load new file**
  Shows the file name of the certificate file that you have loaded using the "Search" button.
- **Browse**
  Select a certificate file saved on the configuration PC that is to be loaded on the RTU.
- **Load on device**
  Click the button to load the selected file on the RTU.

Own key

Configure the private key that matches the certificate of the RTU.

- **Currently used file**
  Display of the file name of the currently used file.
- **Delete**
  Deleting the currently used file. Click the "Apply" button to delete the file.
- **File used after applying**
  Shows the name of the last key file to be loaded on the RTU (on clicking the "Load on device" button).
- **Load new file**
  Shows the file name of the key file that you have loaded from the configuration PC using the "Search" button.
- **Search**
  Select a key file saved on the configuration PC that is to be loaded on the RTU.
- **Load on device**
  Click the button to load the selected file on the RTU.
- **Do not start communication mode if send buffer is full**
  - Enabled: If new data points are entered in the overflowed event buffer, no change to communication mode takes place. A transfer attempt only takes place in time for the next planned communication mode.
  - Disabled: If new data points are entered in the overflowed event buffer, communication mode starts.
    Note: This can result in high power consumption in battery-operated stations.

6.22.3 Data points

Data points

In the table "Data points" all configured tags are shown as data points grouped according to tag types.

Data points for inputs of the RTU

- Digital inputs
  Apart from the configured process tags, here you will find the following system tags of the CPU that can be transferred to the communication partner after activation. The names are predefined and can be changed in the WBM.
  - STATUS_ERROR
  - STATUS_RUN
  - STATUS_COM_LAN
  - STATUS_COM_MOBILE
  - STATUS_COM_WAN
  - STATUS_COM_VPN_1
  - STATUS_COM_VPN_2
  - STATUS_COM_TC
  - STATUS_COM_TC_REDU

  You can find explanations on the individual tags and their values in the table in section Permitted characters and parameter lengths (Page 116) under "Messages".
- Analog inputs
- Counter inputs
  These are:
  - Event counters (DI0 and/or DI1)
  - Analog memory bits configured as counters
  - The following system tags (if enabled)
    - STATUS_NEXT_COM_CYCLE
    - STATUS_TIME_NOW
    - MOB_SIG_QUAL
    - MOB_CELL_ID
    - MOB_TX_KB
    - MOB_RX_KB
    - BAT_RES_CHARGE
  - Tags for the expansion card and GPS which are created as counter inputs are also displayed.

Data points for outputs of the RTU

For the values that the communication partner writes in the process direction, the following tag types are available:

- Modbus digital outputs and Modbus analog outputs (32-bit)
- Digital outputs
- Analog memory bits configured as an analog value.

Analog memory bits, counter outputs of the expansion card, Modbus character strings and analog outputs (64-bit) that are configured as counters cannot be written.

See also

Performance data (Page 46)

DNP3 (Page 249)

Configuration of the tags, general parameters (Page 206)

6.22.3.1 Processing of process data

Processing of process data

Data points

When processing process data, the inputs and outputs are processed by the program and saved in the address areas input, output and bit memory of the RTU. The individual addresses are mapped and addressed as data points for the communication or combined for MQTT via topics. The data points are processed one-to-one in the control system or the cloud.

In the IEC protocol, the data point corresponds to an information object. With MQTT, a data point corresponds to one or more tags in a topic.

Below you will find a table with the data types of the addresses and the assigned data point types.

There are two classes of data points:

- Static data points (not with MQTT)
  The values of these data points are saved in the image memory of the RTU.
  A newly read in value of a tag overwrites the last value saved. The values are only transferred after being called up by the communication partner.
- Events
  These are either stored in the send buffer in chronological order and then transmitted or transmitted directly after a value change with a time stamp.

Saving and transferring the events

The values of events are saved in the send buffer (frame memory). Note the overall size of the send buffer, refer to the section Performance data (Page 46).

The send buffer works chronologically: The oldest data is sent first (FIFO principle) and deleted from the send buffer if the transfer was successful.

If data cannot be transferred for a longer period of time and the send buffer is threatening to overflow, the following protocol-dependent response applies:

- Telecontrol Basic, ST7
  The forced image mode
  When the send buffer reaches a fill level of 98%, the RTU changes to the forced image mode. New values from data points are no longer additionally saved but rather they overwrite older existing values.
  When the connection to the communication partner returns, the module changes back to the send buffer mode as soon as the fill level of the send buffer has fallen below 50%.
- DNP3 / IEC
  If the fill level of the send buffer reaches 100%, no more values are saved until the fill level falls below 100% again.
- MQTT
  When the send buffer reaches a fill level of 100%, the RTU changes to the forced image mode. New values of data points are saved to a separate force image memory in this case; there, they can overwrite any older, existing values. This means the history is retained until the fill level reaches 100%; as of that level, only the latest values of each topic are saved.
  In case the connection to the communication partner has returned and space has become available in the send buffer, the values from the forced image memory are transferred to the send buffer. The RTU switches back to the send buffer method.

The saving of the values is triggered by configurable conditions, see the section "Trigger". With MQTT, the trigger options also exist for the topics.

The transfer of the events to the communication partner can be triggered immediately (spontaneously) or after intermediate buffering. This is controlled by the "Transfer mode", see below.

6.22.3.2 Data point table

Type of transmission

You use the parameter to specify whether and, if so, how it is integrated for the data exchange with the master station or the cloud.

The following option is available with all protocols:

- **Only internal use**
  The values of the data point are not transferred to the communication partner.

The other options specify the event class of the data point. They differ depending on the protocol used.

TeleControl Basic / ST7

- **Transfer after call**
  The current value of the data point is saved in the image memory (process image) of the RTU. New values of a data point overwrite the last stored value.
  Only after being called up by the communication partner or at the configured times of the communication mode is the value current at this time transferred.
- **Event (only current value)**
  Only the current value is saved in the send buffer and overwrites the last value saved there.
- **Event (every value)**
  All values that differ from the last saved value are saved in chronological order in the send buffer.

DNP3

- **Class 0**
  Static data point (not an event)
- **Class 1 / Class 2 / Class 3**
  Configuration of the data point as an event of class 1, 2 or 3

The characteristics of classes 1, 2 and 3 are specified within the DNP3 system. The evaluation of the class of the data sent by the station is handled by the master.

IEC

- **Static**
  Static data point (not an event). The current value is only transferred after being called up by the partner.
- **Event (every value)**
  Each value change is saved in chronological order.
- **Event (only current value)**
  Only the current value at the time it was acquired is saved and overwrites the last value saved there.

MQTT

- **Publish**
  The data point can be assigned to up to 8 Publish topics. The assigned topics are saved in chronological order in the send buffer using the value triggers or topic triggers.
- **Subscribe**
  The data point can be assigned to up to 8 Subscribe topics.

Name and data point type

- **Name**
  Configured name of the tag
  After the tag name, there is an abbreviation for the tag type and the consecutive number of the tag added in brackets, for example (AI0) or (DQ3).
- **Data point name**
  Only with the "TeleControl Basic" protocol
  The data point name is part of the addressing by the communication partner (addressing of the OPC items). It is derived from the name of the tag, see section. Configuration of the tags, general parameters (Page 206).
- **Data point type**
  - TeleControl Basic
    Type of the data point
  - ST7
    Type of the data point (object). According to the two transmission directions, the names in send objects with the ending "_S" and in receive objects with the ending "_R". differ from each other.
  - DNP3
    Object class and variation
  - IEC
    Type identification
  - MQTT
    Type of the data point

Object number, Object channel, Partner object number, Bit no.

Use with ST7

The data to be transferred is configured with SINAUT objects.

- **Object number**
  The object number serves the unique addressing of corresponding send and receive objects at the communication partners.
- **Object channel**
  The SINAUT objects process several process values of the same type.
  The object channels of the individual objects address the individual process values, e.g. the individual bits of a command byte.
- **Bit no.**
  With this parameter you address one of the eight command bits (0 .. 7) in the byte of the command objects "Bin08X_S" and "Bin08X_R".
- **Partner object number**
  Object number of the corresponding object at the communication partner

Trigger and Threshold

- **Value trigger**
  The saving of the values of data points configured as an event is triggered by the following conditions:
  - Change
    A change of the process value triggers saving.
    With digital data points, each change is handled as an event.
    With analog data points the change is triggered by a threshold value trigger ("Threshold").
    If the amount of the value change of an analog signal does not exceed the threshold, the value is not saved.
  - Cyclic (not with MQTT)
    The process value is saved in every update cycle of the RTU.
    Note the individual update cycle of each tag from the configuration of "Basic cycle" and "Reduction factor".
  - Both
    The process value is saved when at least one of the two conditions named above is met.
  - Quality change (only with MQTT)
    A change of the QualityCodes triggers saving.
- **Threshold**
  The threshold is the difference between the currently read value and the last saved value of a data point that is configured as an event. With the trigger option "Change" the current value is saved when the threshold value is reached.
  You can configure the threshold value as a percentage (%) or as an absolute value (abs.).
  If you make an entry in one of the two boxes (% or Abs.) the other box is shown with an underlying color. This serves as a request to check the entered or changed value. When you save, the underlying color is removed.
  - Threshold (%)
    Threshold value as a percentage of the measuring range
    Example:
    Analog input (AI) 4-20 mA
    Scaling: 4 mA = 200 m, 20 mA = 1000 m (measuring range = 800 m)
    2% of the measuring range = 16 m
  - Threshold (abs.)
    Threshold value as an absolute value

  With digital inputs and analog memory bits configured as counters, no threshold can be configured.
  With the usage meters (DI) and the analog memory bits configured as analog value, the threshold can only be specified as an absolute value because the value range is unknown.

Transmission mode

- **TeleControl Basic, ST7, IEC**
  Specify whether the values of a data point that is configured as an event are buffered until the next transfer or sent spontaneously (immediately) to the partner.
  The following options are available:
  - Spontaneous
    The values are transferred immediately. With cyclic communication if the condition is met, there is a direct change to the communication mode.
  - Buffered / conditional spontaneous
    The values are buffered and transferred to the partner only in the next communication cycle.

  If the communication mode "Always remain connected" is configured for the RTU on the "Operating mode > Operating modes" page, the values are buffered and sent immediately. With data points with the Type of transmission "Transfer after call" (TeleControl Basic / ST7) or "Static" (IEC) the boxes are grayed out because these values must not be sent spontaneously.
- **DNP3**
  With the DNP3 protocol a spontaneous transfer is configured by entering 0 (zero) on the "DNP3" page for the parameter "Send buffer", see section DNP3 (Page 249).
  Values of data points of class 0 are never sent spontaneously.
- **MQTT**
  Specify whether the saving of a data point triggered by the value trigger is buffered until the next transfer or sent spontaneously (immediately) to the cloud:
  - Change immediately to communication mode
    The values are sent to the cloud immediately. With cyclic communication if the condition is met, there is a direct change to the communication mode.
  - Cyclic
    The values are buffered and transferred to the partner in the next communication cycle.

  If the communication mode "Always remain connected" is configured for the RTU on the "Operating mode > Operating modes" page, the values are buffered and sent immediately.

6.22.3.3 Signal types, data types and data point types

Signal types, data types and data point types of the RTU

Table 6-4 Signal types, data types, data point types

Signal type	Data type (bit)	Supported data point types				
		TeleControl Basic	ST7 (Data points per object)	DNP3 Object group [variation] *	IEC <type identification>	MQTT (Keyword `{{TYPE}}` in the user data)
Digital input	Bool (1)	Digital input 1 Bit		Binary Input 1 [1, **2**] Binary Input Event 2 [1, **2**, 3]	M_SP_TB_1 <30>	BOOL
Digital input	Byte (8)		Cmd01B_S (1 x 8 Commands) Bin04B_S (4 x 1 Byte) Bin08X_S (8 x 1 Bit)			
Digital output	Bool (1)	Digital output 1 Bit		Binary Output 10 [1, 2] Binary Output Event 11 [1, 2] Binary Command 12 [1, 2, 3]	C_SC_NA_1 <45>	BOOL
Digital output	Byte (8)		Cmd01B_R (1 x 8 Commands) Bin04B_R (4 x 1 Byte) Bin08X_R (8 x 1 Bit)			
Digital input (event counter)	Integer without sign (32)	Counter input 32 Bit Unsigned	Cnt01D_S (1 x 32 Bit) Cnt04D_S (4 x 32 Bit)	Counter 20 [**1**, 2] Frozen Counter 21 [1, 2, **5**, 6] Counter Event 22 [1, 2, **5**, 6] Frozen Counter Event 23 [1, 2, **5**, 6]	M_IT_TB_1 <37>	UINT32
Digital input (usage meter)	Floating-point number with sign (32)	Analog input 32 Bit Float	Ana04W_S (4 x 16 Bit) Mean04W_S (4 x 16 Bit) Set01W_S (1 x 16 Bit) Ana04R_S (4 x 32 Bit)	Analog Input 30 [1, 2, **5**] Analog Input Event 32 [1, 2, 3, 4, 5, **7**]	M_ME_TF_1 <36>	SINGLE_FLOAT

Signal type	Data type (bit)	Supported data point types				
		TeleControl Basic	**ST7 (Data points per object)**	**DNP3 Object group [variation] ***	**IEC <type identification>**	**MQTT (Keyword `{{TYPE}}` in the user data)**
Analog input	Floating-point number with sign (32)	Analog input 32 Bit Float	Ana04W_S (4 x 16 Bit) Mean04W_S (4 x 16 Bit) Set01W_S (1 x 16 Bit) Ana04R_S (4 x 32 Bit)	Analog Input 30 [1, 2, **5**] Analog Input Event 32 [1, 2, 3, 4, 5, **7**]	M_ME_NA_1 <9> M_ME_TF_1 <36>	SINGLE_FLOAT
Temperature (internal), Power supply (external), Battery					M_ME_TF_1 <36>	
Analog input (counter)	Integer without sign (32)	Counter input 32 Bit Unsigned	Cnt01D_S (1 x 32 Bit) Cnt04D_S (4 x 32 Bit)	Counter Static 20 [**1**, 2] Frozen Counter 21 [1, 2, **5**, 6] Counter Event 22 [1, 2, **5**, 6] Frozen Counter Event 23 [1, 2, **5**, 6]	M_IT_TB_1 <37>	UINT32
Analog input (analog memory bit)	Floating-point number with sign (32)	Analog input 32 Bit Float	Ana04W_S (4 x 16 Bit) Mean04W_S (4 x 16 Bit) Set01W_S (1 x 16 Bit) Ana04R_S (4 x 32 Bit)		M_ME_TF_1 <36>	SINGLE_FLOAT
Analog output (analog memory bit)	Floating-point number with sign (32)	Analog output 32 Bit Float	Ana04W_R (4 x 16 Bit) Set01W_R (1 x 16 Bit) Ana04R_R (4 x 32 Bit)	Analog Output Status 40 [1, 2, 3] Analog Output 41 [1, 2, 3] Analog Output Event 42 [1, 2, 3, 4, 5, 7]	C_SE_NC_1 <50>	SINGLE_FLOAT

***** DNP3: The variations in bold print are the standard variations preferably used by the RTU.

6.22.3.4 Status IDs of the data points

Status IDs of data points

With the values of the data points, the RTU sends status IDs of the data points. The status IDs can be evaluated by the partner.

The following tables contain the status IDs of the communication protocols.

Status IDs - TeleControl Basic

Table 6-5 Byte assignment of the status byte for data points

Bit	7	6	5	4	3	2	1	0
Flag name	-	NON_ EXISTENT	SB Substituted	LOCAL_ FORCED	CY CARRY	OVER_ RANGE	RESTART	ONLINE
Meaning*	-	Data point does not exist	Substitute value	Local operator control	Counted value overflow before reading the value	Analog value: Value range exceeded	Value not updated after start	Value is valid
Bit status	*not supported (always 0)*	1	*always 0*	*not supported (always 0)*	*not supported (always 0)*	1	1	1

* Refers to the specified "bit status" in the third table row.

Status IDs - DNP3

The status IDs correspond to the following elements of the specification:

OBJECT FLAGS - DNP3 Specification, Volume 6, Data Object Library-Part 1

Table 6-6 DNP3: Bit assignment of the status byte for DNP3 data points

Bit	7	6	5	4	3	2	1	0
Flag name	-	-	-	LOCAL_ FORCED	DISCONTI NUITY	OVER_ RANGE	RESTART	ONLINE
Meaning*	-	-	-	Local operator control	Counted value overflow before reading the value	Value range exceeded, analog value	Value not updated after start	Value is valid
Bit status	*not supported (always 0)*	*not supported (always 0)*	*not supported (always 0)*	*not supported (always 0)*	*not supported (always 0)*	1	1	1

* Refers to the specified "bit status" in the third table row.

Status IDs - IEC

The status IDs correspond to the following elements of the specification:

Quality descriptor - IEC 60870 Part 5-101

Table 6-7 IEC: Bit assignment of the status byte for IEC data points

Bit	7	6	5	4	3	2	1	0
Flag name	IV invalid	NT not topical	SB substituted	BL blocked	-	-	-	OV overflow
Meaning*	Value is valid	Value not updated	Substitute value	-	Counted value-overflow before reading the value	-	-	Value range exceeded, analog value
Bit status	0	1	*not supported (always 0)*	*not supported (always 0)*	*not supported (always 0)*	not supported (always 0)	not supported (always 0)	1

* Refers to the specified "bit status" in the third table row.

Status identifiers - MQTT

In the payload format, the placeholder `{{QUALITY_CODE}}` or `{{QUALITY_CODE_IHUB}}` can be submitted for each data point.

The status indicates the validity of the value.

Range of values:

- GOOD / 0
  The value is valid.
- BAD / -1
  The value of the variable is not valid or not current. Possible causes:
  - OVERRANGE
  - SUBSTITUTED

The value of the status has the following effect on the transmission:

- Publisher → Cloud
  Publishing of messages of the gateway as publisher is independent of the value of the status.
- Cloud → Subscriber
  When a message with the status "BAD" is received, the value is not written to the process image.

6.22.4 Topics (only MQTT)

Topics with MQTT

Here you configure the topics that the RTU is to use for MQTT communication. You can define up to 32 topics. A data point can be assigned to up to 8 topics. The table shows all possible 32 topics with their current settings. By clicking in a row, you can change the settings of the respective topic.

Enable topic

- **Active**
  Enabling the selected topic.
- **Topic**
  The preferred topic name.
  Structure of the name:
  Depending on the requirements of the receiver (broker, cloud) on the format of the topics, the topic name is made up of different parts:
  - Prefix
    Is defined by the MQTT broker and is valid for all topics.
    The prefix of the name is an addressing and structuring string. By using identical prefix components, you can group different topics in topic levels.
  - Topic name
    The preferred name of the topic.
    By inserting multiple name components separated by forward slashes (/), you can create hierarchy levels for later evaluation by the subscriber.
  - Suffix
    Is defined by the MQTT broker and is valid for all topics of the type "Publish".

  In the output field below, you will see a preview of the topic as it was sent to the broker (topic class "Publish") or how the subscribed topic is retrieved by the broker (topic class "Subscribe").
- **Type**
  Selection of the type of topic:
  - Publish
    The Publish topic is sent cyclically, event-driven (see Trigger) and/or through value triggers in case of active communication mode with the values of the assigned data points as payload to the broker.
  - Subscribe
    With active communication mode, the Subscribe topics are registered with the broker; the broker then sends any changes to the RTU using the established MQTT connection.
  - Last will / testament
    You can select only one topic of the type "Last will / testament".
    If the connection between RTU and broker is terminated, this topic sends a message to the subscribers. As soon as the broker (server) detects that the connection to the RTU (client) was terminated, it sends the message of the RTU transmitted when the connection was established to all subscribers that have registered for this topic on the broker.
    The testament message is saved on the broker.

- **Quality**
  You use the "Quality of Service" parameter to specify the transfer performance of the messages for this topic:
  - QoS 0
    Transfer no more than once
    The RTU sends the topic once to the broker. The RTU does not expect an acknowledgment. If the topic is not received by the broker, it is lost.
  - QoS 1
    Transfer at least once
    The RTU sends the topic to the broker until it receives a PUBACK packet as acknowledgment from the broker.
  - QoS 2
    Transfer exactly once
    The RTU sends the topic and waits until it receives the two-step acknowledgment from the broker as specified.
    This version represents the highest level of quality, but it is also associated with the highest administrative burden for the client as well as the server.

  When a connection is aborted, the data frames are buffered for QoS 1 and QoS 2.
- **Retain**
  From topics/groups with the "Retain" flag, the broker always saves the last message.
  When a subscriber subscribes to a new topic or when the connection with a subscriber returns after being terminated, the broker sends the last message on each topic with Retain flag to the subscriber.
  You can set the Retain flag for all or for individual topics/groups (option enabled in single row).
  The higher-level check box activates the function for all topics/groups of the table.
  Note:
  If you want to undo the sending of the last message by the broker to newly connected subscribers after taking up productive operation, this is not performed by retroactively disabling the Retain flag on the topic. The broker will still send the last valid message of the publisher to newly connected subscribers. One possibility to prevent sending of these messages by the broker is to send an empty message (0 bytes) to the broker.
- **Use connection establishment trigger**
  With enabled option, the topic is generated when the connection to the MQTT broker is established and stored in the send buffer.
  This option is grayed out for topics of the type "Subscribe" and "Last will / testament".
- **Use connection termination trigger**
  With enabled option, the topic is generated shortly before the scheduled connection termination (end of the communication cycle is pending) to the MQTT broker and stored in the send buffer. Because the RTU is still in communication mode, the topic can also be sent directly to the broker.
  This option is grayed out for topics of the type "Subscribe" and "Last will / testament".
  Note:
  With the two options Connection establishment and Connection termination trigger, you can, for example, signal the communication status of the RTU to the communication partners. The additional variable "STATUS_NEXT_COM_CYCLE" in the topic informs the communication partners when the RTU is online again in case of cyclic communication mode.

- **Time trigger and time factor**
  The parameters cannot be edited for topics of the type "Subscribe" and "Last will / testament".
  - Time trigger: When enabled, a topic of the type "Publish" is generated at specific intervals and saved in the send buffer.
  - Time factor: Also select a multiple of the basic update cycle.

  The topics are sent in the next communication cycle.
- **Format**
  To specify the format of the payload to be transferred, select a pre-defined syntax template from the list. Adapt the payload format to the requirements of the cloud system, if necessary. A format is a freely editable text with placeholders. The placeholders are resolved according to the rules of the "Mustache" web template system. You change the format and the placeholders in the text box below.
  You will find an overview of the payload formats and their placeholders available for selection in the following sections.
- **Output**
  Display of the topic with example values within the payload formats. With secure connection via TLS, for example, this allows you to verify before transmission how the topic is being forwarded to the broker.
  For topics of the type "Subscribe", the expected payload format of the topic is displayed.
- **Data point list**
  List of data points released on the page "Data points" for Publish (with topic class "Publish" or "Last will / testament") or for Subscribe (with topic class "Subscribe").
  Enable the individual data points to assign them to the topics. By selecting them, you specify the following:
  - For topics of the type "Publish" or "Last will / testament", you specify which data points appear in the payload within the loop over all assigned data points or can also be referenced individually.
  - For topics of the type "Subsribe", you specify which data points must be contained in a received topic so that the values of the entire topic are applied to the process image.

Payload format - JSON generic

The syntax of the JSON format according to ECMA-404 and ISO/IEC 21778:2017 is used. In it, all data points assigned to the topic are mapped to the payload using a loop construct with the specified properties and formatting. The values of the data points (placeholder: {{VALUE}}) are entered as native JSON data types. For better readability, it is shown here in multiple lines with indentations:

```
{
   "Timestamp": "{{PUBLISH_TIMESTAMP}}",
   "DataItems":
   [
      {{#DATA_POINT_ARRAY}}
      {
         "Variable": "{{NAME}}",
```

```
            "Type": "{{TYPE}}",
            "Value": {{VALUE}},
            "QualityCode": "{{QUALITY_CODE}}"
        } {{^LAST_DATA_POINT}},{{/LAST_DATA_POINT}}
        {{/DATA_POINT_ARRAY}}
    ]
}
```

The template is suitable for connection to:

- AWS (Amazon) / IoT Core
- Azure (Microsoft) / IoT Hub
- IBM Cloud (IBM) / Watson IoT Platform

Payload format - XML generic

All data points assigned to the topic are mapped to the payload using a loop construct with the specified properties and formatting. For better readability, it is shown here in multiple lines with indentations:

```
<?xml version="1.0" encoding="UTF-8"?>
<root>
    <Timestamp> {{PUBLISH_TIMESTAMP}} </Timestamp>
    <DataItems>
        {{#DATA_POINT_ARRAY}}
        <DataItem>
           <Variable> {{NAME}} </Variable>
           <Type> {{TYPE}} </Type>
           <Value> {{VALUE}} </Value>
           <QualityCode> {{QUALITY_CODE}} </QualityCode>
        </DataItem>
        {{/DATA_POINT_ARRAY}}
    </DataItems>
</root>
```

The template is suitable for connection to cloud services that expect the XML format.

Payload format - Insights Hub generic

The syntax of the JSON format according to ECMA-404 and ISO/IEC 21778:2017 is used. In it, all data points assigned to the topic are mapped to the payload using a loop construct with the specified properties and formatting. The values of the data points (placeholder: {{VALUE}}) are entered as native JSON data types. For better readability, it is shown here in multiple lines with indentations:

```
{
    "timeseries":
    [
      {
         "timestamp": "{{PUBLISH_TIMESTAMP}}",
         "values":
         [
               {{#DATA_POINT_ARRAY}}
               {
                      "dataPointId": "{{NAME}}",
                      "value": {{VALUE}},
                      "qualityCode": {{QUALITY_CODE_IHUB}}
               } {{^LAST_DATA_POINT}},{{/LAST_DATA_POINT}}
               {{/DATA_POINT_ARRAY}}
         ]
      }
    ]
}
```

The template is suitable for connection to:

- Cloud service " Insights Hub MQTT native".

Payload format - User-defined

Blank template in which you can freely select the format. Each data point can be individually formatted and displayed with selected properties in the payload. You can add additional (e.g. static) content. You can also reference the properties of selected data points multiple times.

For an additional topic, select the entry "Like topic x" from the drop-down list (x stands for the number of the referenced topic) to use the user-defined topic for an additional topic. A change of the format for the referenced topic has an effect on all referencing topics.

The data points can also be referenced directly, that is, without the data point loop having to run through all assigned data points. Referencing is by name of the data point. Example:

If a digital input with the name "Ventil" is defined, the value can be output in the payload format via `{{Ventil.VALUE}}`. To this end, the data point must be assigned to the topic.

Payload format - Subscribe

For topics of the type "Subscribe", the drop-down list is grayed out and preassigned with a predefined format that cannot be changed. The format corresponds to the payload format "JSON generic". The placeholders "`Timestamp`", "`Type`" and "`QualityCode`" are optional.

Placeholder

The following placeholders are available in the format:

- **Time stamp**
  `{{PUBLISH_TIMESTAMP}}`
  Time when the topic was composed and when it was added to the topic buffer.
  When the RTU is in communication mode: Time at which the topic is sent.
  Format: YYYY-MM-DDThh:mm:ss.ssZ
  `{{PUBLISH_TIMESTAMP_UNIX}}`
  Specification as Unix value, e.g. 1635238284.356
- **Start and end of the loop over all assigned data points**
  `{{#DATA_POINT_ARRAY}} {{/DATA_POINT_ARRAY}}`
  Start and end of the loop over all assigned data points.
- **Station**
  `{{DEVNAME}}`
  Station name of the RTU
- **Serial number**
  `{{SERIALNO}}`
  The serial number of the RTU.
- **Data point**
  `{{NAME}}`
  Name of the data point
- **Value**
  `{{VALUE}}`
  Value of the data point
- **QualityCode**
  `{{QUALITY_CODE}}`
  Quality status of the data point as text "GOOD"/"BAD".
  `{{QUALITY_CODE_IHUB}}` or
  `{{QUALITY_CODE_MDSP}}`
  Quality status of the data point as numerical value 0 (GOOD) / -1 (BAD) for the connection to Insights Hub MQTT native.
- **Data type**
  `{{TYPE}}`
  Data type of the data point
- **Unit of the data point**
  `{{UNIT}}`
  Configured or system-defined unit of the data point. With digital tags, this placeholder is empty.

- **Last data point**
  `{{#LAST_DATA_POINT}} {{/LAST_DATA_POINT}}`
  Last data point
- **All except the last data point**
  `{{^LAST_DATA_POINT}} {{/LAST_DATA_POINT}}`
  All data points except the last data point.

6.23 Tag tables

6.23.1 Overview

Tag tables

You can create up to 4 tag tables in the configuration view.

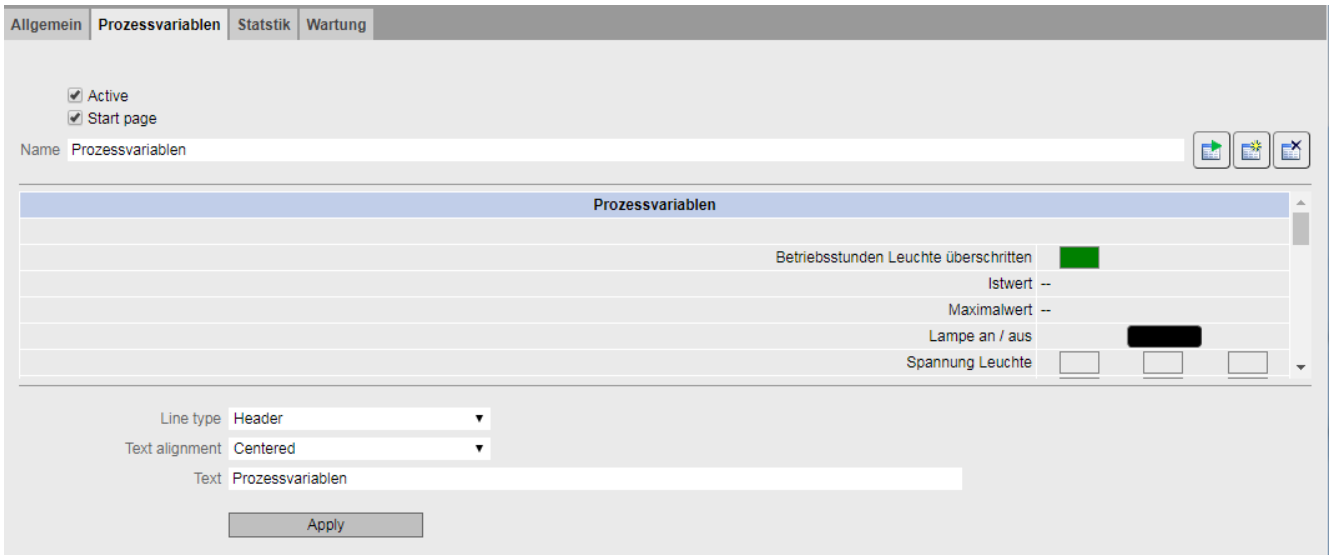

Figure 6-4 Example of tag table in the Configuration view

Buttons

The following buttons are provided on the page:

Button	Meaning
	Configuration view You can edit the table in the Configuration view. To make the table also visible for users with the "User" role, select the "Active" check box. For users with the "Administrator" role, the overview page is displayed as the start page after logging in. If you want the table to appear as the start page after a user with the "User" role logs on without configuration rights, select the "Start page" check box.
	Live view In the Live view, you can check the appearance of the created tag table.
	Insert line Inserts a new row in the table. You can create up to 32 lines per table.
	Delete line Deletes the selected line and a new empty line is inserted at the end of the table.

Creating tag tables

To create a tag table, proceed as follows:

1. Enter a name for the table (max. 20 characters). The name is also displayed as the tab name ① after creation.
2. Select the line type. The options are shown in the following table.
   Frequently occurring parameters are:
   – Text alignment: left, centered, right
   – Text: The text to be displayed in the line (max. 80 characters)
3. Click the "Apply" button.
4. Switch to the Live view to check the appearance of the tag table created. To further edit the table, switch to the Configuration view ②.

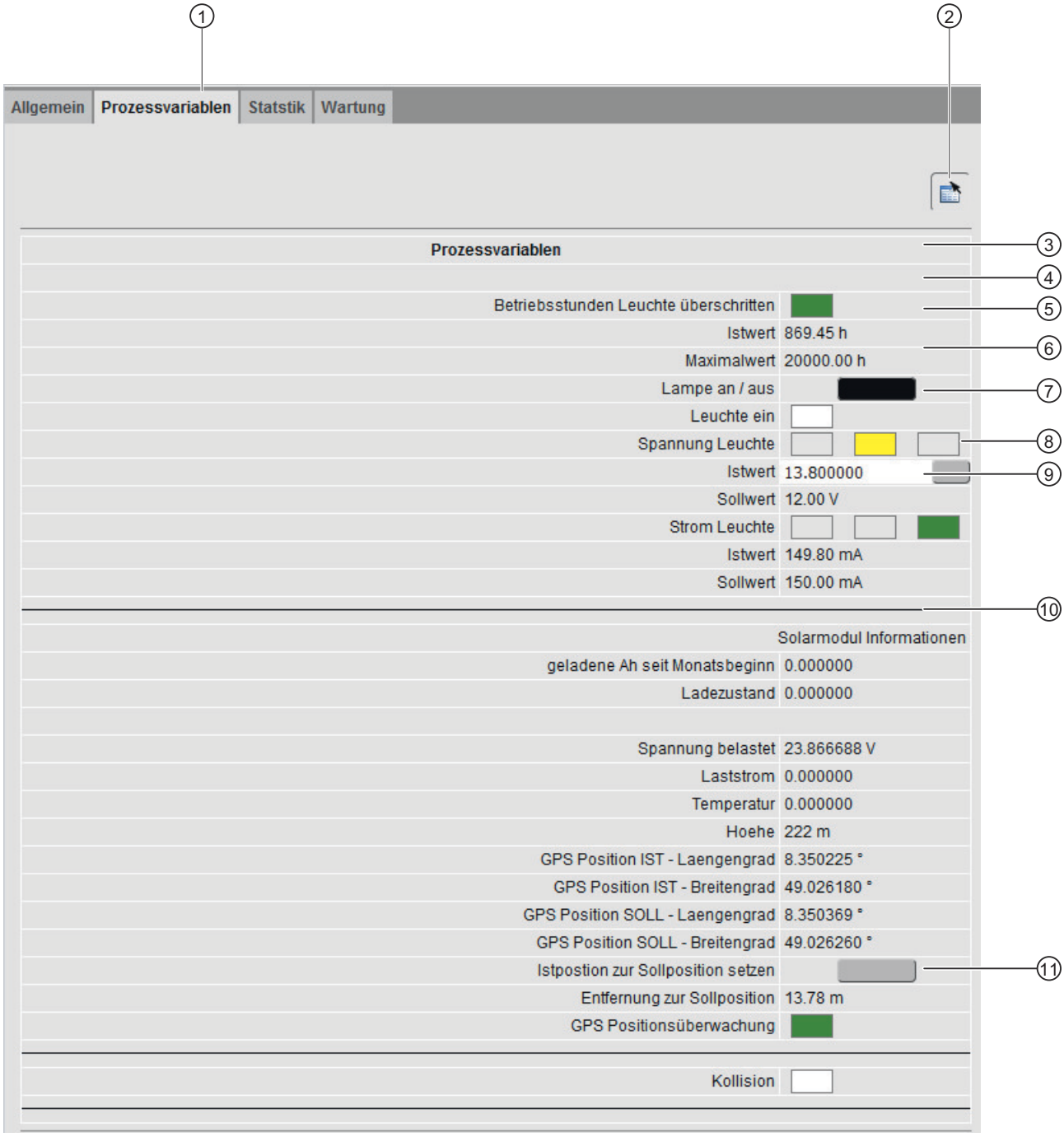

Figure 6-5 Example of a tag table created in the Live view

Table 6-8 Line types and selectable parameters

Number in the example	Line type	Parameter
③	**Header** **Text** Difference: A heading is displayed in "bold" and body text in "normal".	• **Text alignment** • **Text**
④	**Empty line**	No further configuration options are displayed.
⑤	**Text with color status**	• **Text alignment** • **Text** • **Tag** Possible selections: Created digital tags • **Color ON/OFF** Select the color for the status ON (left selection) or for the status OFF (right selection) from the two lists. • **Tag alignment** Select the alignment for the color status field.
⑥	**Text with value display**	• **Text alignment** • **Text** • **Tag** Possible selections: Created digital tags or analog and counter tags. Format and unit, if applicable, are taken from the tag configuration. The "Text for ON/OFF" is used for digital tags. The format and unit configured there is used for analog and counter tags. Tags without formatting configuration (e.g. Battery voltage, Temperature (internal) etc.) use the pre-defined formatting for logging. • **Tag alignment** Alignment of the value and its unit.
⑦	**Text with switch**	• **Text alignment** • **Text** • **Tag** Possible selections: Created tags of the Digital output / bit memory type Alignment of the input box: Centered The button displays the status of the assigned tag via the configured colors. Clicking the button inverts the value of the tag (ON => OFF, OFF => ON). The state is not read again before the new value is written, i.e. the state is changed based on the last reading (update of the page) and thus the last displayed state.
⑧	**Text with traffic light status**	• **Text alignment** • **Text** • **Tag for RED/YELLOW/GREEN** Possible selections: Created digital tags The "Signal unused" entry can be selected for up to two tags. In this case, the corresponding traffic light field is hidden.

Number in the example	Line type	Parameter
⑨	**Text with value entry**	• **Text alignment** • **Text** • **Tag** Possible selections: Created tags of type analog value functions or counter and quantity calculation. Alignment of the input box: Left When the current value is output, the format and, if applicable, the unit from the tag configuration are displayed in the input box.
⑩	**Separation line**	Used for visual delimitation.
⑪	**Text with button**	• **Text alignment** • **Text** • **Tag** Possible selections: Created tags of the Digital output / bit memory type Alignment of the input box of the button: Centered The button does not display the status of the assigned tag. Clicking the button sets the digital output / bit memory to ON.

Configuration (STEP 7) 7

The following configurations are only required for these connection types:

- ST7
- DNP3 when using a TIM 1531 IRC
- IEC 60870-5-104 when using a TIM 1531 IRC

You will find further information in the section Protocol-specific connection parameters (Page 245).

7.1 RTU

Configuring the RTU in STEP 7

With the RTU3000C, you must configure the following parameters in the STEP 7 project:

- **Communication types**
  - Protocol type
    The telecontrol communication type configured in the RTU
  - Temporary connection
    Enable this option if the RTU is connected via mobile wireless and is only in the network temporarily.
- **Ethernet interface**
  - WAN settings
    The settings are permanently preset depending on the selection of the telecontrol protocol.

  Ethernet address

  - Dynamic IP address
    If a dynamic IP address is assigned by the mobile wireless network provider, this option must be enabled.
  - Fixed IP address from the mobile wireless network provider
    Enter the fixed IP address of the RTU assigned by the mobile wireless network provider here.
    If a mobile router is connected in between, enter the IP address of the router here.

- **Subscriber numbers**
  - Subscriber number (RTU)
    Only for ST7: Here, you assign the subscriber number of the RTU as it was configured in the WBM of the RTU.
  - Subscriber number of the CPU (RTU)
    Here, you assign the subscriber number of the CPU as it was configured in the WBM of the RTU.
- **Security**
  The security settings configured in the RTU are permanently enabled in STEP 7 in the default setting.
- **Telecontrol connection**
  Then create the telecontrol connection between the RTU and its connection partner in the "Network data > TeleControl" editor.

Compiling and loading

The STEP 7 configuration data cannot be loaded into the RTU3000C. The RTU3000C therefore cannot be compiled in STEP 7.

7.2 Kommunikationspartner

Configuration of the communications partner in STEP 7

For communication with the partner, a substitute must be configured for the RTU in the STEP 7 project that must be supplied with the required address data and with which a telecontrol connection needs to be created:

- STEP 7 V5.5
  You can find a "CP 1243-8" as proxy in the catalog under "SIMATIC 300 > SINAUT ST7 > TIM IE".
- From STEP 7 Basic / Professional V15
  You will find the proxy for the respective RTU in the catalog under "Detecting & Monitoring > SIMATIC RTU Proxy".

The RTU has the "MSC" network type and the "Station" network node type in the STEP 7 project.

The interface of the communication partner connected to the RTU has the network type "MSC" and the network node type "Master station".

Program blocks

8

8.1 Block overview

For the control tasks of the RTU, you will find ready-made program blocks that you create and program in the "Program" entry in the WBM.

The following program blocks are available:

- **Blocks for logical functions**
  - Logical AND (Page 293)
  - Logical OR (Page 294)
  - Exclusive OR (XOR) (Page 295)
  - Logical NOT (Page 295)
- **Blocks for basic types of calculation**
  - Addition (Page 296)
  - Subtraction (Page 297)
  - Multiplication (Page 298)
  - Division (Page 299)
- **Blocks for time functions**
  - On delay (Page 300)
  - Off delay (Page 301)
  - On/off delay (Page 303)
  - Retentive on delay (Page 304)
  - Pulse generator (Page 306)
  - Pulse sequence (Page 307)
  - Random on/off delay (Page 306)
  - Year timer (Page 311)
  - Week timer (Page 314)
  - Astronomical clock (Page 315)

- **Blocks for analog value functions**
  - Triggered saving (Page 317)
  - Limit value switch (Page 319)
  - Difference limit switch (Page 321)
  - Range monitoring (Page 324)
  - Analog value comparator (Page 326)
  - Analog value monitoring (Page 318)
  - Min. /Max. /Mean value (Page 327)
  - Analog value processing (Page 329)
  - GPS position (RTU30x1C) (Page 330)
  - Statistics (Page 332)
- **Counter and summation blocks**
  - Counters (Page 335)
  - Elapsed time counter (Page 337)
  - Frequency calculation (Page 339)
  - Flow calculation (Page 340)
  - Flow totalizer (Page 341)
  - Flow calculation rectangular weir (Page 343)
  - Silo volume calculation (Page 345)
- **Blocks for messages**
  - Sending SMS messages (Page 347)
  - Send e-mail (Page 348)
  - FTP file transfer (Page 349)
- **Switch and relay blocks**
  - Latching relays (Page 352)
  - Current impulse relay (Page 354)
  - Wiping relay (Page 356)
  - Time relay (Page 358)
- **Others**
  - Operating status (Page 360)
  - Operating mode (Page 362)
  - Formula (Page 363)
  - Script (Page 366)

Configuration limits

For information on the configuration limits of the program blocks, refer to the section. Performance data (Page 46).

8.2 Parameter assignment of the blocks

Programming the program blocks for the control tasks

Networks

For control tasks of the RTU you can create up to 8 networks for program blocks.

Every network is shown in a tab of the WBM. In the top line of the tab, you can assign a name to the network (max. 20 characters).

In the second line of the tab, you can enter a comment for this network (max. 64 characters).

When you open the WBM "Network 1" is already created.

Display and configuration of networks and blocks

The blocks are represented graphically.

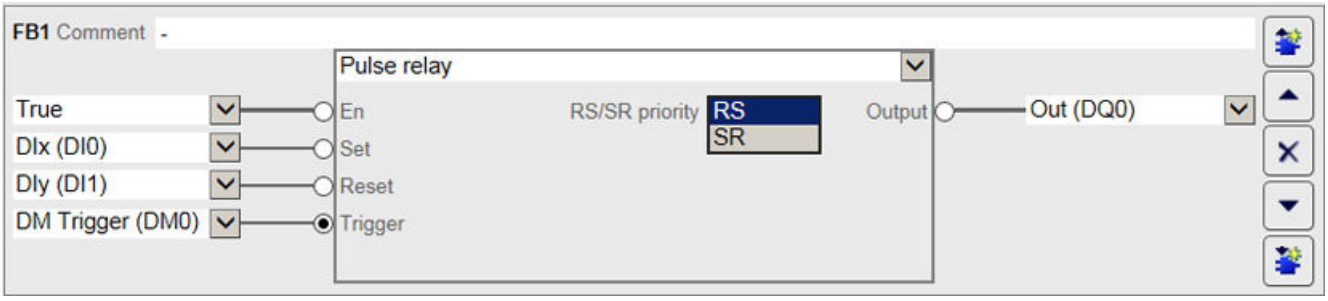

Figure 8-1 Representation of a program block, here with an inverted input parameter "Trigger"

After creating a program block, you can select the block type from the drop-down list of the block name (as shown: "Pulse relay").

At the top of the block, you can enter an optional comment for the block (max. 64 characters).

The input parameters on the left and the output parameters on the right are assigned using the drop-down lists from the previously configured tags of the RTU.

Function parameters in the middle of the block icon are programmed by entering with the keyboard or by selecting a value from a drop-down list (in the figure: "RS/SR priority").

Buttons

	Creates a new network or deletes the selected network after confirmation of the query.
	Moves the selected network including the function blocks configured in it to the left.
	Moves the selected network including the function blocks configured in it to the right.
	Creates a new program block above.
	Moves the selected program block up.
	Deletes the selected program block.
	Moves the selected program block down.
	Creates a new program block below.
En	Inverted input/output with contact symbol filled with black (here parameter "En")

Inverting inputs and outputs

You can invert the values of digital (binary) inputs and outputs by clicking on the round symbol at the input or output. The symbol is filled with black, see table.

Example:

- A non-inverted digital input is processed with the input signal 1.
- An inverted digital input is processed with the input signal 0.

In the block shown (see above), the input parameter "Trigger" is inverted.

Entry of decimal numbers

In all input boxes of parameters in which fractional decimal numbers can be entered, the decimal places are separated by a period.

Dynamic function parameters

For the following blocks, the function parameters of the block can be configured dynamically at runtime using input parameters:

- On delay
- Off delay
- On/off delay
- Retentive on delay
- Pulse generator

- Pulse contact relay
- Time relay

Note

No automatic consistency check for dynamic function parameters

When using the dynamic value specification via the input parameters, the WBM consistency check is bypassed and it is possible to configure invalid function parameters in the block.
If such a combination is detected, the respective block is not processed.

8.3 Often used parameters

Enabling parameter "En"

Every program block contains the input parameter "En".

The processing (call) of the blocks is enabled via the input parameter "En". The possible values of the parameter have the following meaning:

- **True**
  Default setting when creating a new block
  With this setting, the enable is permanently activated. The block is processed in the configured update cycle.
- **False**
  With this setting, the enable is permanently deactivated. The block is not processed.
- **Digital input / digital output / digital memory bit**
  The block is called by the cyclic program if a 1 is present at the configured input.
  If the input is inverted, the block is called when there is a 0 at the input.
- **STATUS_ERROR**
  The block is only called by the cyclic program if a diagnostics message of the class "ERROR" or "FATAL" is pending.
- **STATUS_RUN**
  Corresponds to the value "True", because the input is only read in when the user program is running.
- **STATUS_COM_LAN**, **STATUS_COM_MOBILE**, **STATUS_COM_WAN**, **STATUS_COM_VPN_1**, **STATUS_COM_VPN_2**, **STATUS_COM_TC**, **STATUS_COM_TC_REDU**
  The block is called by the cyclic program if the selected interface has established a connection.
  If the input is inverted, the block is called when the selected interface has no established connection.

Input parameter "Trigger"

Input parameter of the "Trigger" type initiate the execution of the respective program block with the edge transition 0 → 1. The input must be reset to 0 by the by the user program. In the inverted form, a trigger starts block processing with the edge change 1 → 0.

The possible values of the parameter have the following meaning:

- **True**
  In this setting, the trigger triggers block processing only in the first cycle after block start. The block is processed only once.
- **False**
  In this setting, the trigger never triggers block processing.
- **Digital input / digital output / digital memory bit**
  The block is called on edge transition 0 → 1 of the respective process tag.
  If the input is inverted, the block is called when the value at the input changes from 0 → 1.
- **STATUS_ERROR**
  The block is only called on an edge change, this means if a diagnostics message of the class "ERROR" or "FATAL" is generated.
- **STATUS_RUN**
  Block processing is triggered exactly once every time the user program is started.
  The user program is started or restarted in the following situations:
  - Module restart
  - On change to the configuration if processing was already enabled beforehand
  - Through a click on the "Start" button, see section General functions of the WBM (Page 114).
- **STATUS_COM_LAN**, **STATUS_COM_MOBILE**, **STATUS_COM_WAN**, **STATUS_COM_VPN_1**, **STATUS_COM_VPN_2**, **STATUS_COM_TC**, **STATUS_COM_TC_REDU**
  Block processing is triggered when the selected interface has changed its status from "not connected" to "connected".

Input parameter "Reset"

Input parameters of the "Reset" type initiate the reset of the respective program block with the edge transition 0 → 1. The output of the program block is reset or set to a defined start value. The function block remains reset as long as the "Reset" input parameter remains at the value 1. The input must be reset to 0 by the user in the program. In the inverted form, a trigger triggers the reset with the edge transition 1 → 0.

With the exception of the latching relay the input parameter "Reset" is optional.

The possible values of the parameter have the following meaning:

- **True**
  With this setting the other inputs are ignored. The function block remains permanently reset and is not processed.
- **False**
  The output of the block is never reset.
- **STATUS_ERROR**
  The block is reset or set to a defined start value on an edge transition if a diagnostics message of the class "ERROR" or "FATAL" is generated.
  In this setting, the trigger triggers block processing when a diagnostics messages of the class "ERROR" or "FATAL" is generated.

- **STATUS_RUN**
  Corresponds to the value "True", because the input is only read in when the user program is running.
- **STATUS_COM_LAN**, **STATUS_COM_MOBILE**, **STATUS_COM_WAN**, **STATUS_COM_VPN_1**, **STATUS_COM_VPN_2**, **STATUS_COM_TC**, **STATUS_COM_TC_REDU**
  The reset is triggered when the selected interface has changed its status from "not connected" to "connected".

"Retentivity" function parameter

Retentivity means that block values such as counter values and statistics data are saved in RAM for up to 3 hours when the RTU is shut down. The values are still present after a restart and block processing can continue with the existing values. The values are retained even in the event of a change to the configuration, if the signals or parameters remain unchanged in the individual block types.

The option can be activated across block types for up to 32 blocks. This includes the following block types:

- Counter
- Elapsed time counter
- Flow totalizer
- Flow calculation rectangular weir
- Statistics

Output parameter "Error"

The output parameter "Error" is set in the following situations:

- In an analog value block, the value is outside the range of values.
  This occurs when the value calculated by the block is outside the permitted range of values of the tag type of the output.
- A message generated by a block cannot be saved because the maximum number of messages to be saved has been reached (transfer buffer full).

When the output parameter "Error" is set, other output parameters are not updated but retain the last values before the error occurred.

Recurring settings of parameters

With most program blocks there are default settings of the input and output parameters that are explained here.

Settings of input parameters

Many blocks have recurring parameters which will be described in advance here. The settings described below mainly involve parameters for digital tags (except "En").

- *- empty (no entry) -*
  Default for required inputs of a block
  If the input is not configured, the configuration cannot be adopted.
- **Unused**
  Default for optional parameters of a newly created block
  Inputs with the setting "Unused" are not evaluated.
  If all inputs of a block use this setting, the block will not be processed (e.g. "Logical OR").
- **True**
  With this setting, the value 1 is always used for block processing.
- **False**
  With this setting, the value 0 is always used for block processing.
- **STATUS_ERROR**
  The input is only evaluated in block processing when a diagnostics message of the class "ERROR" or "FATAL" is generated.
  When the cause of the error has been eliminated, the value of the input is reset to zero.
- **STATUS_RUN**
  Corresponds to the value 1 because the input is only read in when the user program is running.
- **STATUS_COM_LAN**, **STATUS_COM_MOBILE**, **STATUS_COM_WAN**, **STATUS_COM_VPN_1**, **STATUS_COM_VPN_2**, **STATUS_COM_TC**, **STATUS_COM_TC_REDU**
  The input returns the status of the interface for the execution of the user program.
  If the connection is established, the tag has the value 1.
  If the connection is not established, the tag has the value 0.

Settings of output parameters

- *- empty (no entry) -*
  Default for required outputs of a block
  If the output is not configured, no value is output during block processing.
- **Unused**
  Default for optional or alternative outputs of a block
  If the output is not configured, the configuration cannot be adopted.

See also

Note for parameters (Page 293)

8.4 Note for parameters

Abbreviations in the parameter tables

- The following value ranges are summarized with the abbreviation **STATUS_COM:** STATUS_COM_LAN, STATUS_COM_MOBILE, STATUS_COM_WAN, STATUS_COM_VPN_1, STATUS_COM_VPN_2, STATUS_COM_TC, STATUS_COM_TC_REDU
- The following tag types/value ranges are summarized with the abbreviation **STATUS_COUNTER**: STATUS_NEXT_COM_CYCLE, MOB_SIG_QUAL, MOB_CELL_ID, MOB_TX_KB, MOD_RX_KB, BAT_RES_CHARGE, STATUS_TIME_NOW

8.5 Blocks for logical functions

8.5.1 Logical AND

Function

At least one input must be activated so that the block is processed.

The output of the block is set to 1, when all configured inputs are set to 1 at the same time.

If one or more activated inputs is set to 0, the output is set to 0.

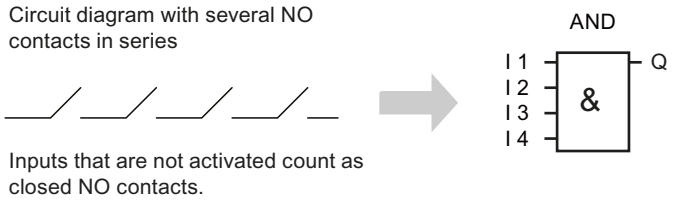

Parameters

Parameters	Range of values	Description
Input parameters		
En		Enable parameter, see section Often used parameters (Page 289).
Input 1 ... Input 4	• Digital input / output / memory bit • True / False • STATUS_COM • STATUS_ERROR • STATUS_RUN	The values of the inputs are processed by the block function.

Parameters	Range of values	Description
Output parameters		
Output	• Digital output / memory bit	Tag in which the value calculated by the block is output.

8.5.2 Logical OR

Function

At least one input must be activated so that the block is processed.

The output of the block is set to 1, when at least one configured input is set to 1.

If no input is set to 1, the output is set to 0.

Circuit diagram with several NO contacts in parallel

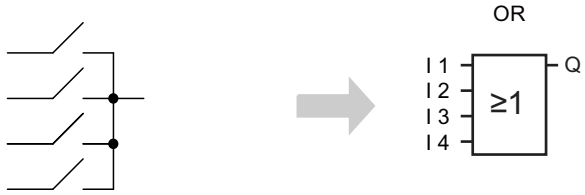

Inputs that are not activated count as open NO contacts.

Parameters

Parameters	Range of values	Description
Input parameters		
En		Enable parameter, see section Often used parameters (Page 289).
Input 1 ... Input 4	• Digital input / output / memory bit • True / False • STATUS_COM • STATUS_ERROR • STATUS_RUN	The values of the inputs are processed by the block function.
Output parameters		
Output	• Digital output / memory bit	Tag in which the value calculated by the block is output.

8.5.3 Exclusive OR (XOR)

Function

The output of the block is set to 1 when the two inputs have different values; in other words, when precisely one of the two inputs is set to 1.

If both inputs have the same value (0 or 1), the output is set to 0.

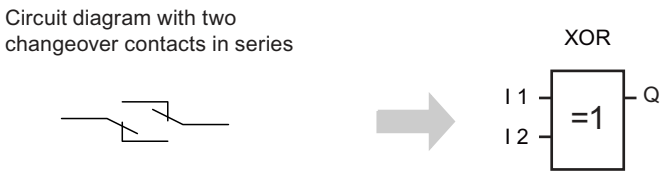

Parameters

Parameters	Range of values	Description
Input parameters		
En		Enable parameter, see section Often used parameters (Page 289).
Input 1 ... Input 2	• Digital input / output / memory bit • True / False • STATUS_COM • STATUS_ERROR • STATUS_RUN	The values of the inputs are processed by the block function.
Output parameters		
Output	• Digital output / memory bit	Tag in which the value calculated by the block is output.

8.5.4 Logical NOT

Function

Inverter: The block inverts the input signal.

If the input is set to 0, the output of the block is set to 1.

If the input is set to 1, the output of the block is set to 0.

Parameters

Parameters	Range of values	Description
Input parameters		
En		Enable parameter, see section Often used parameters (Page 289).
Input	• Digital input / output / memory bit • True / False • STATUS_COM • STATUS_ERROR • STATUS_RUN	The value of the input is processed by the block function.
Output parameters		
Output	• Digital output / memory bit	Tag in which the value calculated by the block (the inverted value of the input) is output.

8.6 Blocks for basic types of calculation

8.6.1 Addition

Function

The block adds the values of up to four analog inputs. The sum is written to the output.

Parameters

Parameters	Tag type / range of values	Description
Input parameters		
En		Enable parameter, see section Often used parameters (Page 289).
Input 1 .. Input 4	• Analog input / memory bit • Event counter / usage meter • STATUS_COUNTER	The values of the activated inputs are used for the addition. Inputs with the setting "Unused" are not evaluated.
Output parameters		

Parameters	Tag type / range of values	Description
Sum	Analog memory bit • Configured as a floating-point number: ±3.402823 e-38 .. ±3.402823 e+38 • Configured as a counter: 0 .. 4294967295	Tag in which the calculated sum is output.
Error	Digital output / memory bit	Error display: • 0: Block processing completed without errors • 1: Block processing aborted with an error For the meaning, see Often used parameters (Page 289).

8.6.2 Subtraction

Function

The block subtracts the values of one to three inputs (Input 2 + Input 3 + Input 4) from the value of the input "Input 1". The difference is written to the output.

Parameters

Parameters	Tag type / range of values	Description
Input parameters		
En		Enable parameter, see section Often used parameters (Page 289).
Input 1	• Analog input / memory bit • Event counter / usage meter • STATUS_COUNTER	Minuend. The values of the inputs 2 ..4 are subtracted from this input.
Input 2 .. Input 4	• Analog input / memory bit • Event counter / usage meter • STATUS_COUNTER	Subtrahends. The sum of the values of the activated inputs 2 to 4 is subtracted from the value of Input 1. Inputs with the setting "Unused" are not evaluated.
Output parameters		

Parameters	Tag type / range of values	Description
Difference	Analog memory bit • Configured as a floating-point number: ±3.402823 e-38 .. ±3.402823 e+38 • Configured as a counter: 0 .. 4294967295	Tag in which the calculated difference is output.
Error	Digital output / memory bit	Error display: • 0: Block processing completed without errors • 1: Block processing aborted with an error For the meaning, see Often used parameters (Page 289).

8.6.3 Multiplication

Function

The block multiplies the values of up to four analog inputs. The product is written to the output.

Parameters

Parameters	Tag type / range of values	Description
Input parameters		
En		Enable parameter, see section Often used parameters (Page 289).
Input 1 .. Input 4	• Analog input / memory bit • Event counter / usage meter • STATUS_COUNTER	The values of the activated inputs are used for the multiplication. Inputs with the setting "Unused" are not evaluated.
Output parameters		

Parameters	Tag type / range of values	Description
Product	Analog memory bit • Configured as a floating-point number: ±3.402823 e-38 .. ±3.402823 e+38 • Configured as a counter: 0 .. 4294967295	Tag in which the calculated product is output.
Error	Digital output / memory bit	Error display: • 0: Block processing completed without errors • 1: Block processing aborted with an error For the meaning, see Often used parameters (Page 289).

8.6.4 Division

Function

The block divides the value of the input "Dividend" by the value of the input "Divisor". The quotient is written to the output.

Parameters

Parameters	Tag type / range of values	Description
Input parameters		
En		Enable parameter, see section Often used parameters (Page 289).
Dividend	• Analog input / memory bit • Event counter / usage meter • STATUS_COUNTER	The value of the input is used as a dividend.
Divisor	• Analog input / memory bit • Event counter / usage meter • STATUS_COUNTER	The value of the input is used as a divisor. The value 0 is not permitted.
Output parameters		

Parameters	Tag type / range of values	Description
Quotient	Analog memory bit • Configured as a floating-point number: ±3.402823 e-38 .. ±3.402823 e+38 • Configured as a counter: 0 .. 4294967295	Tag in which the calculated quotient is output.
Error	Digital output / memory bit	Error display: • 0: Block processing completed without errors • 1: Block processing aborted with an error For the meaning, see Often used parameters (Page 289).

8.7 Blocks for time functions

Note

Higher energy consumption due to additional update cycles

Time functions can generate additional update cycles to update the outputs of the function. Additional update cycles can significantly increase power consumption.

8.7.1 On delay

Function

When there is an edge change 0 → 1 at the "Trigger" input, the configurable time of the On delay is started. After the On delay has elapsed, the output is set to 1.

If "Trigger" changes back to 0 before the On delay has elapsed, the On delay is stopped and the output remains set to 0.

If "Trigger" is reset to 0 before the On delay (Q = 1) has elapsed, the output (Q) is reset to 0.

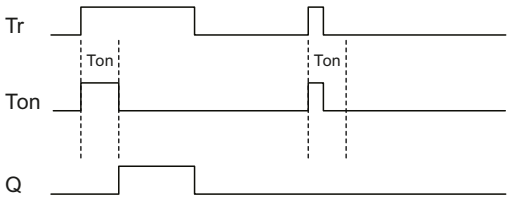

Tr Trigger
Ton On delay
Q Output

Figure 8-2 Circuit diagram of a block. "On delay"

Parameters

Parameters	Range of values	Description
Input parameters		
En		Enable parameter, see section Often used parameters (Page 289).
Trigger	• True / False • Digital input / output / memory bit • STATUS_COM • STATUS_ERROR • STATUS_RUN	When there is an edge change 0 → 1 the On delay is started. When there is an edge change 1 → 0 the output is reset to 0. With the setting "True" the trigger is always active. With the setting "False" the block is never processed.
On delay (ms)	• Analog input / memory bit	Dynamic delay time in milliseconds If the signal is busy, the input value is used as the delay time of the function block. With the default setting "Signal unused", the configured function parameter of the function block is used.
Function parameters		
On delay (ms)	100 .. 999999999	Delay in milliseconds
Output parameters		
Output	• Digital output / memory bit	Tag in which the value calculated by the block is output.

8.7.2 Off delay

Function

If there is an edge change 0 → 1 at the "Trigger" input, the output is set to 1.

When there is an edge change 1 → 0 at the "Trigger" input, the configurable time of the Off delay is started. While the delay time is running the output remains set to 1. The output is only set to 0 again after the delay time has elapsed.

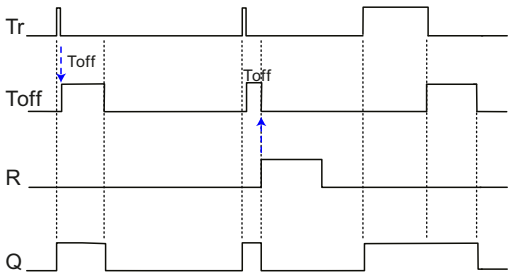

Parameters

Parameters	Range of values	Description
Input parameters		
En		Enable parameter, see section Often used parameters (Page 289).
Trigger	• True / False • Digital input / output / memory bit • STATUS_COM • STATUS_ERROR	If there is an edge change 0 → 1, the output is set to 1. When there is an edge change 1 → 0 at the "Trigger" input, the configurable time of the Off delay is started. While the delay time is running the output remains set to 1. After the Off delay has elapsed, the output is set to 0 again. With the setting "True" the trigger is always active. With the setting "False" the block is never processed.
Reset	• True / False • Digital input / output / memory bit • STATUS_COM • STATUS_ERROR • STATUS_RUN	When there is an edge change 0 → 1, the Off delay is started, and the output is set to 0. As long as "Reset" is set to 1, the value of "Trigger" is ignored. When there is an edge change 1 → 0 the block can be processed again. With the setting "True" the input is always active and the block is essentially turned off. With the setting "False" the Off delay is never reset.
Off delay (ms)	• Analog input / memory bit	Dynamic delay time in milliseconds If the signal is busy, the input value is used as the delay time of the function block. With the default setting "Signal unused", the configured function parameter of the function block is used.
Function parameters		
Off delay (ms)	100 .. 999999999	Delay in milliseconds
Output parameters		
Output	• Digital output / memory bit	Tag in which the value calculated by the block is output.

8.7.3 On/off delay

Function

When there is an edge change 0 → 1 at the "Trigger" input, the configurable time of the On delay is started. After the On delay has elapsed, the output is set to 1. If "Trigger" changes back to 0 before the On delay has elapsed, the delay time is stopped and the output remains set to 0.

When there is an edge change 1 → 0 at the "Trigger" input, the configurable time of the Off delay is started. After the Off delay has elapsed, the output is set to 0. If "Trigger" changes back to 1 before the Off delay has elapsed, the output is set to 0. At the same time the running of the On delay is restarted and the Off delay is stopped.

When there is an edge change 0 → 1 at the input "Reset" the On / Off delay is suppressed and the output remains set to 0.

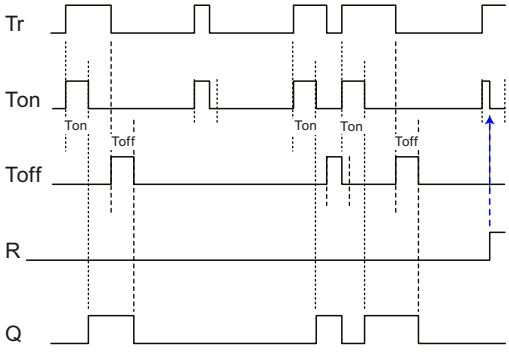

Tr	Trigger
Ton	On delay
Toff	Off delay
R	Reset
Q	Output

Figure 8-3 Circuit diagram of a block. "On / Off delay"

Parameters

Parameters	Range of values	Description
Input parameters		
En		Enable parameter, see section Often used parameters (Page 289).
Trigger	• True / False • Digital input / output / memory bit • STATUS_COM • STATUS_ERROR • STATUS_RUN	When there is an edge change 0 → 1 the On delay is started. When there is an edge change 1 → 0 the Off delay is started. With the setting "True" the trigger is always active. With the setting "False" the block is never processed.

Parameters	Range of values	Description
Reset	• True / False • Digital input / output / memory bit • STATUS_COM • STATUS_ERROR • STATUS_RUN	When there is an edge change 0 → 1 the On / Off delay is stopped and the output is set to 0. As long as the input is set to 0, the value of "Trigger" is ignored. When there is an edge change 1 → 0 the block can be processed again. With the setting "True" an edge change 0 → 1 at "Trigger" is permanently ignored. The "Off delay" function is therefore also turned off. With the setting "False" the input is never active.
On delay (ms)	• Analog input / memory bit	Dynamic delay time in milliseconds If the signal is busy, the input value is used as the delay time of the function block. With the default setting "Signal unused", the configured function parameter of the function block is used.
Off delay (ms)	• Analog input / memory bit	Dynamic delay time in milliseconds If the signal is busy, the input value is used as the delay time of the function block. With the default setting "Signal unused", the configured function parameter of the function block is used.
Function parameters		
On delay (ms)	100 .. 999999999	On delay in milliseconds After the On delay has elapsed, the output is set to 1.
Off delay (ms)	100 .. 999999999	Off delay in milliseconds After the Off delay has elapsed, the output is set to 0.
Output parameters		
Output	• Digital output / memory bit	Tag in which the value calculated by the block is output.

8.7.4 Retentive on delay

Function

When there is an edge change 0 → 1 at the "Trigger" input, the configurable time of the On delay is started. After the delay time has elapsed, the output is set to 1.

With this program block, if "Trigger" changes back to 0 before the delay time has elapsed, the On delay is not stopped.

When there is an edge change 0 → 1 at the "Reset" input during the On delay, the On delay is stopped and the output remains set to 0.

When there is an edge change 0 → 1 at the "Reset" input after the On delay has elapsed the output is reset to 0.

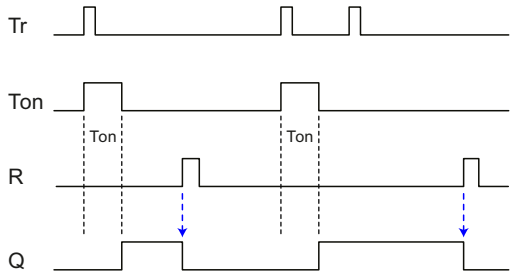

Tr	Trigger
Ton	On delay
R	Reset
Q	Output

Figure 8-4 Circuit diagram of a block. "Retentive on delay"

Parameters

Parameters	Range of values	Description
Input parameters		
En		Enable parameter, see section Often used parameters (Page 289).
Trigger	• True / False • Digital input / output / memory bit • STATUS_COM • STATUS_ERROR	When there is an edge change 0 → 1 the time of On delay is started. With the setting "True" the trigger is always active. With the setting "False" the block is never processed.
Reset	• True / False • Digital input / output / memory bit • STATUS_COM • STATUS_ERROR • STATUS_RUN	When there is an edge change 0 → 1 at the "Reset" input after the On delay (= 1) has elapsed the output is reset to 0. With the setting "True" the input is always active and the output is set to 0 immediately. The function is therefore actually turned off. With the setting "False" the input is never active.
On delay (ms)	• Analog input / memory bit	Dynamic delay time in milliseconds If the signal is busy, the input value is used as the delay time of the function block. With the default setting "Signal unused", the configured function parameter of the function block is used.
Function parameters		
On delay (ms)	100 .. 999999999	On delay in milliseconds After the time of the On delay has elapsed, the output is set to 1.
Output parameters		
Output	• Digital output / memory bit	Tag in which the value calculated by the block is output.

8.7.5 Pulse generator

Function

A regularly clocked pulse is output at the output. The cycle length is specified for the duration of the 0 and 1 signal using the function parameters.

Parameters

Parameters	Range of values	Description
Input parameters		
En		Enable parameter, see section Often used parameters (Page 289).
Pulse duration (ms)	Analog input / memory bit	Dynamic pulse duration in milliseconds If the signal is busy, the input value is used as a pulse duration for the function block. With the default setting "Signal unused", the configured function parameter of the function block is used.
Interpulse period (ms)	Analog input / memory bit	Dynamic interpulse period in milliseconds If the signal is busy, the input value is used as a interpulse period for the function block. With the default setting "Signal unused", the configured function parameter of the function block is used.
Function parameters		
Pulse duration (ms)	500 .. 999999999	Time (milliseconds) in the clock cycle during which the output = 1.
Interpulse period (ms)	500 .. 999999999	Time (milliseconds) in the clock cycle during which the output = 0.
Output parameters		
Output	• Digital output / bit memory	Tag in which the pulses generated by the block are output.

8.7.6 Random on/off delay

Function

When there is an edge change 0 → 1 at the "Trigger" input, the random time of the On delay is started (within the configured limits). After the On delay has elapsed, the output is set to 1. If "Trigger" changes back to 0 before the On delay has elapsed, the delay time is stopped and the output remains set to 0.

When there is an edge change 1 → 0 at the "Trigger" input, the random time of the Off delay is started (within the configured limits). After the Off delay has elapsed, the output is set to 0. If "Trigger" changes back to 1 before the Off delay has elapsed, the output is set to 0. At the same time the running of the On delay is restarted and the Off delay is stopped.

When there is an edge change 0 → 1 at the input "Reset" the On delay is suppressed and the output remains set to 0.

For the diagram, refer to On / Off delay.

Parameters

Parameters	Range of values	Description
Input parameters		
En		Enable parameter, see section Often used parameters (Page 289).
Trigger	• True / False • Digital input / output / memory bit • STATUS_COM • STATUS_ERROR • STATUS_RUN	When there is an edge change 0 → 1 the On delay is started. When there is an edge change 1 → 0 the Off delay is started. With the setting "True" the trigger is always active. With the setting "False" the block is never processed.
Reset	• True / False • Digital input / output / memory bit • STATUS_COM • STATUS_ERROR • STATUS_RUN	When there is an edge change 0 → 1 On delay is stopped and the output is set to 0. As long as the input is set to 0, the value of "Trigger" is ignored. When there is an edge change 1 → 0 the block can be processed again. With the setting "True" an edge change 0 → 1 at "Trigger" is permanently ignored. The "Off delay" function is therefore also turned off. With the setting "False" the input is never active.
Function parameters		
On delay (ms)	100 .. 999999999	Minimum time in the clock cycle during which the output = 1.
On delay max. (ms)	100 .. 999999999	Maximum time in the clock cycle during which the output = 1.
Off delay min (ms)	100 .. 999999999	Minimum time in the clock cycle during which the output = 0.
Off delay max. (ms)	100 .. 999999999	Maximum time in the clock cycle during which the output = 0.
Output parameters		
Output	• Digital output / memory bit	Tag in which the pulses generated by the block are output.

8.7.7 Pulse sequence

Function

A maximum of 2 blocks of this type can be created.

A repetitive pulse sequence with configurable duration of the individual high and low phases is sent to the output. The phase position of the first phase is always high. If the pulse sequence is to begin with the phase position "Low", the first phase can also be configured with the duration 0 or the output can be negated.

The processing of the pulse sequence starts with the edge change 0 → 1 of the "Automatic mode" input. When automatic mode is disabled, the phase position is defined by the "Manual phase" input. A negation of the output also inverts the manual phase.

The duration of an individual phase can be entered by selecting it from the "Phase number" list and entering the duration in the unit of the configured "Phase time base". To do this, use the selection list to select the number of the phase (1 .. 18). Then enter the phase duration in the input box. When you have configured all phase durations, click on the "Apply" button.

The total duration and thus the return of the pulse sequence as well results from the sum of the configured phase durations and is displayed in the "Return" field.

The start of the pulse sequence is synchronized with the start time of the update cycle of the module plus the specified "Start delay" if an integer multiple of the "Total duration" results in 24 hours.

If no integer multiple results, the start of the pulse sequence is only bound to the start time when the RTU is started and after changing the configuration. In this case, the "Return" field is highlighted in color, but the configuration can still be applied.

The "Edge correction" parameter can be used to shift all rising and falling edges together by up to +/-100 ms relative to their theoretical edge position. This can be used, for example, to compensate for delays in the actuators to be controlled, such as the annealing time or the cooling time of incandescent lamps.

The sum of the total duration of the phase position "High" (without taking into account the negation of the output) can be output at the "Duration high phase" output with the set "Duration time base" for statistical purposes, such as the duty cycle of light sources. The duration of the high phase thereby also takes into account the value of the manual phase and the edge correction in automatic mode. The sum of the total duration can be reset to 0 by an edge change 0 → 1 of the "Reset" input parameter.

The feedback of the actuator connected at the output can be created at the "Disruption" input. The ratio of the error-free peak phase to the nominal peak phase is displayed at the "Availability" output in percent (0 ... 100).

The value of the total duration and the duration of the fault is always stored in the retentive memory of the RTU so that the values "Duration high phase" and "Availability" are retained and continued even in case of configuration changes or restart of the RTU.

The configured pulse sequence is displayed below the block parameters. However, the start delay, the edge corrections and the negation at the output are not taken into account.

The output of the block can be connected to the following digital outputs:

RTU3010C and RTU3030C: DQ0 ... DQ3

RTU3031C and RTU3041C / RTU3051C: DQ0 ... DQ7

Note

Restrictions for the "Output" output parameter

- The "Output" output parameter cannot be used as an input in the rest of the user program, because the "Pulse sequence" block requires exclusive access to a digital output due to the special time requirements.
- The "Output" output parameter cannot be logged, transmitted via TeleControl or used in a tag table.

Parameters

Parameters	Tag type / range of values	Description
Input parameters		
En		Enable parameter, see section Often used parameters (Page 289).
Automatic mode	• True / False • Digital input / output / memory bit • STATUS_COM • STATUS_ERROR • STATUS_RUN	When there is an edge change 0 → 1, processing of the configured pulse sequence is started. When there is an edge change 1 → 0, processing is stopped and the value of the "Manual phase" input is output at the output.
Manual phase	• True / False • Digital input / output / memory bit • STATUS_COM • STATUS_ERROR • STATUS_RUN	With disabled "Automatic mode", the value created here is output at the output.
Disruption	• True / False • Digital input / output / memory bit • STATUS_COM • STATUS_ERROR • STATUS_RUN	The value "True" means that the actuator deviates from the setpoint and that a disruption is pending.
Reset	• True / False • Digital input / output / memory bit • STATUS_COM • STATUS_ERROR • STATUS_RUN	Resets the duration of the high phase and the availability calculation on a positive edge (0 → 1) to 0 or 100 %. With the setting "True", the duration is continuously reset, and the outputs "Duration high phase" and "Availability" remain permanently set to 0 or 100 %. With the setting "Not used" or "False", the duration and the availability are not reset.
Function parameters		
Number of phases	1 .. 18	Specifies the number of pulse phases to be configured.

Parameters	Tag type / range of values	Description
Phase time base	100 ms 1 s	Time base for phase duration and start delay
Phase number	1 .. 18	Selected phase (1 .. 18) whose duration can be entered in the text box.
Phase duration	1 .. 240	Duration of the selected phase (1 .. 18) in the configured "time unit".
Start delay	0 .. 240	Shift of the start of the pulse sequence compared to the start time of the update cycle of the module. This also makes it possible to realize a phase shift between two pulse sequence components.
Edge correction up/down	-100 .. +100	Static shift of all rising or falling edges of this block in milliseconds. A negative value provides for an earlier phase changeover point, a positive value for a later phase changeover point.
Return	--	Display of the total duration of a pulse sequence
Duration time base	100 ms 1 s 1 min 1 h	Time base of the duration of the "High" phase position output by the block at the "Duration high phase" output.
Output parameters		
Output	Digital Out	Tag in which the pulses generated by the block are output.
Duration high phase	Analog memory bit • Configured as a floating-point number: ±3.402823 e-38 .. ±3.402823e+38 • Configured as a counter: 0 .. 4294967295	Tag in which the totaled duration of the phase position "High" is output. In the event of configuration as counter and overflow (4294967295), the counter starts again at 0. With an edge change 0 → 1 at the "Reset" input parameter, the counter starts again at 0.
Availability	Analog memory bit • Configured as a floating-point number: ±3.402823 e-38 .. ±3.402823e+38 • Configured as a counter: 0 .. 4294967295	Tag in which the availability is to be output in percent (0 .. 100) in relation to the set phase position "High". With an edge transition 0 → 1 at the "Reset" input parameter, the availability calculation starts again with 100 %.

8.7.8 Year timer

Requirement

Requirement for a precise calculation is the time-of-day synchronization of the RTU.

Function

For the year timer a time per calendar year and/or per month can be specified in the function parameters during which the output is set to 1.

The turn on and off times are entered in the format "yyyy-mm-dd hh:mm:ss". Dates can be entered in the range from January 2000 to December 2099.

By selecting the "Yearly" and "Monthly" check boxes, you determine whether the programmed time entries are evaluated and repeated annually or monthly.

If you select the "Pulse" option, at the turn on time only a single pulse with the length of an update cycle is set at the output instead of being permanently ON.

Switching variants from the function parameters "Yearly", "Monthly" and "Pulse"

The options for activating the function parameters result in the following switching variants. Four typical switching variants are explained below based on examples.

- **Example 1**
  - Date/time ON: 2015-06-15 12:00:00
  - Date/time OFF: 2017-08-31 12:00:00
  - "Yearly" disabled
  - "Monthly" disabled
  - "Pulse" disabled

  Since the options "Yearly" and "Monthly" are both disabled, the settings produce a single time during which the output is set to 1. The time begins on 15 June 2015 and ends on 31 August 2017.

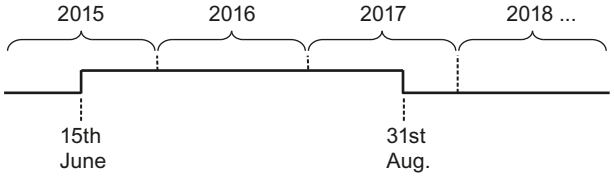

- **Example 2**
  - Date/time ON: 2015-03-15 12:00:00
  - Date/time OFF: 2018-08-31 12:00:00
  - "Yearly" disabled
  - "Monthly" disabled
  - "Pulse" enabled

  Since the options "Yearly" and "Monthly" are both disabled, the settings produce a single pulse on 15 March 2015.

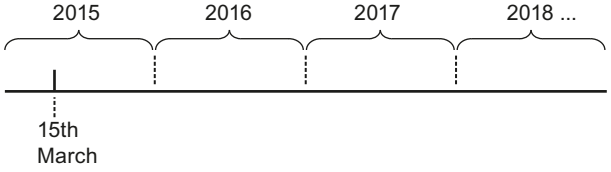

- **Example 3**
  - Date/time ON: 2015-05-15 12:00:00
  - Date/time OFF: 2099-08-31 12:00:00
  - "Yearly" enabled
  - "Monthly" disabled
  - "Pulse" disabled

  The settings result in yearly time periods during which the output is set to 1.

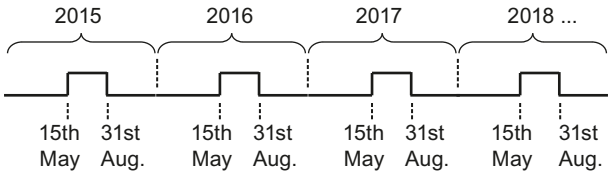

- **Example 4**
  - Date/time ON: 2015-08-15 00:00:00
  - Date/time OFF: 2099-12-15 00:00:00
  - "Yearly" enabled
  - "Monthly" enabled
  - "Pulse" enabled

  The settings result in continuous monthly pulses on the 15th of the month at the time 00:00.

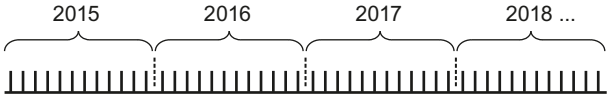

Parameters

Parameters	Range of values	Description
Input parameters		
En		Enable parameter, see section Often used parameters (Page 289).
Function parameters		
Date/time ON	[yyyy-mm-dd hh:mm:ss]	Turn on time
Date/time OFF	[yyyy-mm-dd hh:mm:ss]	Turn off time
Pulse	ON / OFF	The enabled option sets only one pulse at the output for the duration of an update cycle instead of continuous ON.
Yearly	ON / OFF	Repeats the switching points annually.
Monthly	ON / OFF	Repeats the switching points monthly.
Output parameters		
Output	• Digital output / bit memory	Tag in which the value calculated by the block is output.

8.7.9 Week timer

Requirement

Requirement for a precise calculation is the time-of-day synchronization of the RTU.

Function

For the week time, three times (cams) can be specified per week using the function parameters during which the output is set to 1.

If you select the "Pulse" option, at the turn on time only a single pulse with the length of an update cycle is set at the output instead of being permanently ON. When the "Pulse" option is selected, the behavior applies to all three cams.

The switching status of the week timer depends on the status of all three cams.

The three cams can overlap in time. If on and off times overlap, this will cause a conflict. In this case, the earliest on and off times have priority. Example:

Table 8-1 Example of overlapping cams

Cam	On time	Off time
1	1:00 h	2:00 h
2	1:10 h	1:50 h
3	1:20 h	1:40 h

In this example the working time is 1:00 h to 1:40 h.

Parameters

Parameters	Range of values	Description
Input parameters		
En		Enable parameter, see section Often used parameters (Page 289).
Function parameters		
M T W T F S S	ON / OFF	Check box for specifying the weekdays (three periods of time) Select the active weekdays by clicking on the day check box.
ON1 .. ON3 OFF1 .. OFF3	[hh:mm]	Input boxes for three turn on times Input boxes for three turn off times
Pulse	ON / OFF	The enabled option only sets pulses at the output instead of permanently ON.
Output parameters		
Output	• Digital output / bit memory	Tag in which the value calculated by the block is output.

8.7.10 Astronomical clock

Requirement

Requirement for a precise calculation is the time-of-day synchronization of the RTU.

Function

This function sets the output to 1 if the system time of the RTU is between the times of sunrise and sunset.

The RTU calculates these times based on its current system time (including time zone and daylight saving/standard time) and its geographical position. Make sure that the time zone and daylight-saving/standard time changeover are set correctly in order to obtain correct changeover times.

If you select "System location" for the "Position" parameter, the RTU uses the geographical position configured on the "System" WBM page. With the setting "Manual" you can set position values for the block. With the "Variable" setting, the coordinates at the two inputs "Latitude" and "Longitude" are used as geographical position to determine the times.

With the "Deviation sunrise" and "Deviation sunset" parameters, the two switching points of the output can be moved by up to 120 minutes to an earlier or later time.

Parameters

Parameters	Range of values	Description
Input parameters		
En		Enable parameter, see section Often used parameters (Page 289).
Latitude	Analog memory bit configured as a floating-point number: ±3.402823e-38 .. ±3.402823e+38	You only need to assign the input if you configure the "Latitude" function parameter for the "Variable" setting. Analog bit memory of the floating-point number type: • North = positive • South = negative
Longitude	Analog memory bit configured as a floating-point number: ±3.402823e-38 .. ±3.402823e+38	You only need to assign the input if you configure the "Longitude" function parameter for the "Variable" setting. Analog bit memory of the floating-point number type: • East = positive • West = negative
Function parameters		

Parameters	Range of values	Description
Position	• System location • Manual • Variable	Option for setting the geographic coordinates: • System location: Use of the coordinates configured for the RTU on the page "System > General". • Manual: Manual entry of coordinates in the input boxes for "Latitude" and "Longitude". • Variable: Use of the coordinates from the two input parameters "Latitude" and "Longitude".
Latitude	-90 .. 0 .. +90	Latitude Enter the value for the latitude if you have selected the setting "Manual" for the "Position". Degree as number with 6 decimal places: • North = positive • South = negative
Longitude	-180 .. 0 .. +180	Longitude Enter the value for the longitude if you have selected the setting "Manual" for the "Position". Degree as number with 6 decimal places: • East = positive • West = negative
Deviation sunrise	-120 .. 0 .. +120	Value in minutes by which the switching point for sunrise is shifted: • Negative value = earlier • Positive value = later
Deviation sunset	-120 .. 0 .. +120	Value in minutes by which the switching point for sunset is shifted: • Negative value = earlier • Positive value = later
Output parameters		
Output	• Digital output / bit memory	Tag for the value calculated by the block. Switching: • At sunrise: 1 • At sunset: 0
Error	Digital output / bit memory	Error display: 0: Permissible values at the "Latitude" and "Longitude" input signals. 1: Impermissible values at the "Latitude" and "Longitude" input signals.

8.8 Blocks for analog value functions

8.8.1 Triggered saving

Function

The block saves the current value of an analog input when a programmable event (Trigger) occurs. With an edge change 0 → 1 of "Trigger" the value of the input is written to the output.

The "Reset" input resets the output to 0. As long as "Reset" is set to 1, the "Trigger" input is ignored.

Parameters

Parameters	Tag type / range of values	Description
Input parameters		
En		Enable parameter, see section Often used parameters (Page 289).
Trigger	• True / False • Digital input / output / memory bit • STATUS_COM • STATUS_ERROR • STATUS_RUN	With an edge change 0 → 1 block processing is started and the value of "Input" is saved in the "Output". With the setting "True" an edge change 0 → 1 of the trigger is evaluated in the first update cycle. The block is processed only once. With the setting "False" the block is never processed.
Reset	• True / False • Digital input / output / memory bit • STATUS_COM • STATUS_ERROR • STATUS_RUN	When there is an edge change 0 → 1 the output is reset to 0. With the setting "TRUE" the function is actually turned off. With the setting "False" the output is never reset.
Input	• Analog input / memory bit • Event counter / usage meter • STATUS_COUNTER	The current value of the input parameter is processed by the block as described above.
Output parameters		

Parameters	Tag type / range of values	Description
Output	Analog memory bit • Configured as a floating-point number: ±3.402823 e-38 .. ±3.402823 e+38 • Configured as a counter: 0 .. 4294967295	Tag in which the value calculated by the block is output.
Error	Digital output / memory bit	Error display: • 0: Block processing completed without errors • 1: Block processing aborted with an error For the meaning, see Often used parameters (Page 289).

8.8.2 Analog value monitoring

Function

The analog value of the input is monitored for positive and negative change when the "Trigger" input is activated.

The values for a positive change (Δ+) and a negative change (Δ-) can be programmed.

When the "Trigger" input is set, the current value of the input (A_{Trg}) is saved and the block processing started. As soon as the value of the analog input has reached the value of the negative change (A_{Trg} + Δ-) or the value of the positive change (A_{Trg} + Δ+) the output is set to 1.

As soon as the value of the analog input is once again between the values A_{Trg} + Δ- and A_{Trg} + Δ+ the output is set to 0 again.

Parameters

Parameters	Tag type / range of values	Description
Input parameters		
En		Enable parameter, see section Often used parameters (Page 289).
Trigger	• True / False • Digital input / output / memory bit • STATUS_COM • STATUS_ERROR • STATUS_RUN	With an edge change 0 → 1 block processing is started (if En = 1) and the current value of the analog input (A_{Trg}) is saved. With the setting "True" the trigger is always active. With the setting "False" the block is never processed.

Parameters	Tag type / range of values	Description
Input	• Analog input / memory bit • Event counter / usage meter • STATUS_COUNTER	The value (A_{Trg}) of the input at the time of the edge change of "Trigger" is monitored by the block function for positive and negative change.
Function parameters		
Positive change	3.402823 e-38 .. 3.402823 e+38 Max. 19 characters, display of max. 4 decimal places	Absolute value of the positive change (Δ+)
Negative change	3.402823 e-38 .. 3.402823 e+38 Max. 19 characters, display of max. 4 decimal places	Absolute value of the negative change (Δ-)
Output parameters		
Output	Digital output / memory bit	Tag in which the value calculated by the block is output: • 1 = "Positive change" overshot or "Negative change" undershot • 0 = "Positive change" not overshot and "Negative change" not undershot

8.8.3 Limit value switch

Function

An analog input is monitored for two values and a digital output signal is set that depends on the function of the block.

From the arrangement of the two function parameters "Limit value 1" and "Limit value 2" the function provides:

- **Limit value with hysteresis**
  Limit 1 ≥ Limit 2
  The limit value is given a hysteresis for example to control a pump.
  Two applications are possible:
  - **Limit value $_{high}$ with negative hysteresis**
    When the input signal exceeds "Limit value 1" the output is set to 1.
    When the input signal falls below "Limit value 2" the output is set to 0.

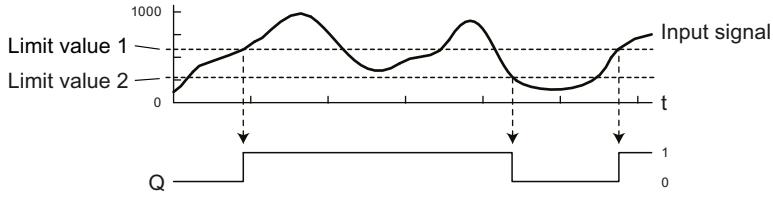

Figure 8-5 Operating diagram of an example of limit value $_{high}$ with negative hysteresis

  - **Limit value $_{low}$ with positive hysteresis**
    You can monitor the input signal for a $_{low}$ limit with positive hysteresis, if you invert the output signal via the black contact symbol.
    For information on inverting, see section Parameter assignment of the blocks (Page 287).

- **Window (range monitoring)**
  Limit value 1 < Input signal < Limit value 2
  A range of the analog value (window) between "Limit value 1" and "Limit value 2" is monitored.
  - **Output = 1, when input signal is within the window.**

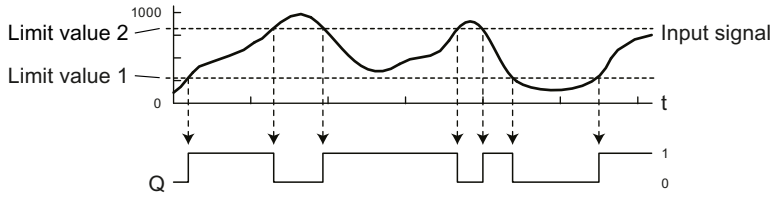

Figure 8-6 Operating diagram of an example of the window function

  - **Output = 0, when input signal is within the window.**
    For this functionality you need to invert the "Output" using the black contact symbol.

Parameters

Parameters	Tag type / range of values	Description
Input parameters		
En		Enable parameter, see section Often used parameters (Page 289).

Parameters	Tag type / range of values	Description
Input	• Analog input / memory bit • Event counter / usage meter • STATUS_COUNTER	The value of the input is monitored by the block with the two functions described above.
Function parameters		
Limit value 1	3.402823 e-38 .. 3.402823 e+38 Max. 19 characters, display of max. 4 decimal places.	Limit value 1 (absolute value)
Limit value 2	3.402823 e-38 .. 3.402823 e+38 Max. 19 characters, display of max. 4 decimal places.	Limit value 2 (absolute value)
Output parameters		
Output	Digital output / memory bit	Tag in which the value calculated by the block is output.
Error	Digital output / memory bit	Error display: • 0: Block processing completed without errors • 1: Block processing aborted with an error For the meaning, see Often used parameters (Page 289).

8.8.4 Difference limit switch

Function

An analog input is monitored for two values and a digital output signal is set that depends on the function of the block.

Functions of the block:

- **Limit value with hysteresis**
- **Window (range monitoring)**

The function results from the position of the threshold value decided by the programming of the "Function" parameter.

The functions of this block correspond to those of the block "Limit value switch". With Difference limit switch the position of the monitored values relative to each other is specified, while with Limit value switch the position is absolute.

Calculation of the threshold value

The threshold value is calculated with the three function parameters:

- "Limit value"
  - Is the first of the values of the input signal to be monitored.
  - Is the basis for calculating the threshold value.
- "Function"
  Decides the position of the threshold value compared with the limit value:
  - Positive: Threshold value > Limit value
  - Negative: Threshold value < Limit value

  The position of the threshold value decides the function of the block, see below.
- "Amount of difference"
  Decides the amount of the threshold value compared with the limit value.

The absolute value of the threshold value is calculated as follows:

- "Limit value" + "Amount of difference" ("function" = positive)
  or
- "Limit value" - "Amount of difference" ("function" = negative)

Block functions

The two functions of the block depend on the position of the threshold value compared with the Limit value:

- **Window (range monitoring)**
  "Function" = "+ (window)"
  Limit value < Input signal < Threshold value
  A range of the analog value (window) between limit value and threshold value is monitored.
  Two applications are possible:
  - **Output = 1, when input signal is within the window.**
    For the operating diagram see Limit value switch.
  - **Output = 0, when input signal is outside the window.**
    For this functionality you need to invert the "Output" using the black contact symbol.
- **Limit value with hysteresis**
  "Function" = "+ (hysteresis)"
  Threshold value < Limit value
  The limit value is given a hysteresis for example to control a pump.
  Two applications are possible:
  - **Limit value ^{high} with negative hysteresis**
    When the input signal exceeds the limit value the output is set to 1.
    When the input signal falls below the threshold value the output is set to 0.
  - **Limit value $_{low}$ with positive hysteresis**
    You can monitor the input signal for a $_{low}$ limit with positive hysteresis, if you invert the output signal via the black contact symbol.

Parameters

Parameters	Tag type / range of values	Description
Input parameters		
En		Enable parameter, see section Often used parameters (Page 289).
Input	• Analog input / memory bit • Event counter / usage meter • STATUS_COUNTER	The value of the input is monitored for the limit value and a threshold value by the block.
Function parameters		
Limit value	3.402823 e-38 .. 3.402823 e+38 Max. 19 characters, max. 4 decimal places.	Limit value to be monitored (absolute value) The parameter is included in the calculation of the threshold value.
Function	• + (Window) • - (Hysteresis)	The parameter is included in the calculation of the threshold value and decides the functionality of the block: • + (Window) Output set to 1 when the input signal is within the window between limit value and threshold value. • - (Hysteresis) When the input signal exceeds the "Limit value" the output is set to 1. When the input signal falls below the threshold value the output is set to 0. For information on inverting the input signal see above.
Amount of difference	0 ... 3.402823e+38 Max. 19 characters, display of max. 4 decimal places	Amount of the difference value The parameter is included in the calculation of the threshold value.
Output parameters		
Output	Digital output / memory bit	Tag in which the value calculated by the block is output.

See also

Limit value switch (Page 319)

8.8.5 Range monitoring

Function

An analog input is monitored for a maximum of 3 value ranges and the output signal is set accordingly.

You can use the block to create a graded series of limit values. For example, you can assign three ranges to a 4...20 mA signal and generate different signals via the block, for example for different signal qualities.

A low limit and high limit is configured for each range.

The block evaluates the ranges as follows:

- Evaluation in ascending order
  The ranges are evaluated in ascending order from 1 to 3. The evaluation is ended as soon as the signal is within a range, i.e. the output is set to 1.
- Exclusive evaluation
  The ranges are evaluated exclusively.
  This means the following prioritization of the ranges:
  - Range 1: Highest priority
  - Range 2: Medium priority
  - Range 3: Lowest priority

  As soon as the input signal is in two or three ranges, only the output of the highest priority is set. If the signal is in range 1 and range 2, for example, only signal 1 is set. This means that at most one of the three outputs is set.

The block can therefore assume up to 4 possible states.

Example:

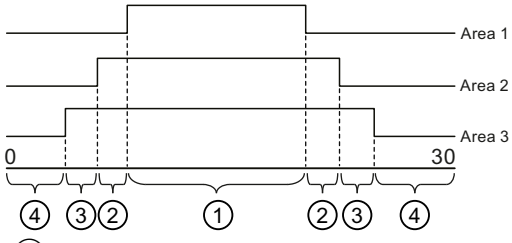

① The signal is within ranges 1, 2 and 3. Only Output 1 is set.
② The signal is within ranges 2 and 3. Only Output 2 is set.
③ The signal is within range 3. Only Output 3 is set.
④ No output is set, since the signal is not in any of the configured ranges.

Figure 8-7 Example of range monitoring

Consistent evaluation requires that the outputs are assigned valid tags.

The ranges are evaluated as follows:

- Low limit < High limit (input within limits)
  Output is set to 1: Low limit ≤ Input signal < High limit
  Output is set to 0: Input signal < Low limit or Input signal ≥ High limit
- High limit == Low limit
  Output is always set to 0, i.e. the range is disabled
- Low limit ≥ High limit
  Output is set to 1: Input signal < High limit or Input signal ≥ Low limit
  Output is set to 0: High limit ≤ Input signal < Low limit

The output "Mean value range 1" can be used for diagnostic purposes and statistical evaluations to output the mean value formed from the configured low limit and high limit of range 1 as analog or count value.

Parameters

Parameters	Tag type / range of values	Description
Input parameters		
En		Enable parameter, see section Often used parameters (Page 289).
Input	• Analog input / memory bit • Event counter / usage meter • STATUS_COUNTER	The value of the input is monitored by the block with the configured ranges.
Function parameters		
Range 1 .. 3 low limit	±3.402823 e-38 .. ±3.402823 e+38 Max. 19 characters, display of max. 4 decimal places	Low limit of the respective range (absolute value)
Range 1 .. 3 high limit	±3.402823 e-38 .. ±3.402823 e+38 Max. 19 characters, display of max. 4 decimal places	High limit of the respective range (absolute value)
Output parameters		

Parameters	Tag type / range of values	Description
Output 1 .. 3	Digital output / memory bit	Tag 1 .. 3, into which the value calculated by the block for the respective range 1 .. 3 is output. Output 1 must be assigned. The other two outputs are optional. If output 3 is assigned, output 2 must also be assigned. An unused output disables the respective range evaluation.
Mean value range 1	Analog memory bit • Configured as a floating-point number: ±3.402823 e-38 .. ±3.402823e+38 • Configured as a counter: 0 .. 4294967295	Mean value from low limit and high limit of range 1.

8.8.6 Analog value comparator

Function

The values of two analog inputs are compared by forming the difference. If the difference of two programmable limit values is overshot or undershot, a digital output signal is set.

The difference of "Input 1" minus "Input 2" is monitored for the two limit values "Limit value 1" and "Limit value 2":

By setting different values for the function parameter (Limit value 1 > Limit value 2) a hysteresis can be programmed.

In the table note the different behavior when "Limit value 1" is lower or higher than "Limit value 2".

Parameters

Parameters	Tag type / range of values	Description
Input parameters		
En		Enable parameter, see section Often used parameters (Page 289).
Input 1	• Analog input / memory bit • Event counter / usage meter • STATUS_COUNTER	The value of the input is processed as a minuend by the block function.

Parameters	Tag type / range of values	Description
Input 2	• Analog input / memory bit • Event counter / usage meter • STATUS_COUNTER	The value of the input is processed as a subtrahend by the block function.
Function parameters		
Limit value 1	3.402823 e-38 .. 3.402823 e+38 Max. 19 characters, display of max. 4 decimal places	Turn on limit value (absolute value) • Limit value 1 ≥ Limit value 2: When the difference of "Input 1" minus "Input 2" exceeds the value "Limit value 1", the output is set to 1. • Limit value 1 < Limit value 2: When "Limit value 1" ≤ ("Input 1" minus "Input 2") < "Limit value 2", the output is set to 1.
Limit value 2	3.402823 e-38 .. 3.402823 e+38 Max. 19 characters, display of max. 4 decimal places	Turn off limit value (absolute value) • Limit value 1 ≥ Limit value 2: If the difference of "Input 1" minus "Input 2" undershoots the value "Limit value 2" the output is set to 0.
Output parameters		
Output	Digital output / memory bit	Tag in which the value calculated by the block is output.

8.8.7 Min. /Max. /Mean value

Function

With the values from a minimum of one and a maximum of four analog inputs, the block can perform the functions minimum, maximum and mean value generation. The result of the calculation is written to the relevant output.

To activate the individual functions, the output in question must be programmed.

- Minimum
  From the activated analog inputs, the minimum value is determined in each update cycle and written to the output.
- Maximum
  From the activated analog inputs, the maximum value is determined in each update cycle and written to the output.
- Mean value
  From the activated analog inputs, the mean value is generated in each update cycle and written to the output.

Parameters

Parameters	Tag type / range of values	Description
Input parameters		
En		Enable parameter, see section Often used parameters (Page 289).
Input 1 .. Input 4	• Analog input / memory bit • Event counter / usage meter • STATUS_COUNTER	The values of the configured inputs are processed by the three types of calculation. Inputs with the setting "Unused" are not evaluated.
Output parameters		
Minimum	Analog memory bit • Configured as a floating-point number: ±3.402823 e-38 .. ±3.402823 e+38 • Configured as a counter: 0 .. 4294967295	Tag in which the obtained minimum value is output.
Maximum	Analog memory bit • Configured as a floating-point number: ±3.402823 e-38 .. ±3.402823 e+38 • Configured as a counter: 0 .. 4294967295	Tag in which the obtained maximum value is output.
Mean value	Analog memory bit • Configured as a floating-point number: ±3.402823 e-38 .. ±3.402823 e+38 • Configured as a counter: 0 .. 4294967295	Tag in which the calculated mean value is output.
Error	Digital output / memory bit	Error display: • 0: Block processing completed without errors • 1: Block processing aborted with an error For the meaning, see Often used parameters (Page 289).

8.8.8 Analog value processing

Function

The block has the following functions:

- Smoothing
  The function reads in the analog signal at the input according to the number of "Sampling cycles" and outputs the mean value.

As an option the value output can be scaled with the following functions:

- Gain factor
- Zero point offset

In the program a total of up to 4 of these blocks can be used.

Parameters

Parameters	Tag type / range of values	Description
Input parameters		
En		Enable parameter, see section Often used parameters (Page 289).
Input	• Analog input / memory bit • Event counter / usage meter • STATUS_COUNTER	Analog signal to be processed
Function parameters		
Sampling cycles	1 .. 16	The number of "Sampling cycles" specifies how many values of the analog signal are acquired for one processing cycle of the block. One sampling cycle corresponds to one update cycle. In every update cycle, the RTU acquires one value. The number of update cycles is the same as the number of "Sampling cycles".
Gain	±3.402823 e-38 .. ±3.402823 e+38 Max. 19 characters, display of max. 4 decimal places	This value is multiplied by the calculated mean value.
Zero point offset	±3.402823 e-38 .. ±3.402823 e+38 Max. 19 characters, display of max. 4 decimal places	This value is added to the product of mean value and gain.
Output parameters		

Parameters	Tag type / range of values	Description
Output	Analog memory bit Configured as a floating-point number: ±3.402823 e-38 .. ±3.402823 e+38	Tag in which the value calculated by the block is output.
Status	True / False	Setting "False" when the number of sampled values is below the number set for sampling.
Error	True / False	Overshoot or undershoot occurred.

8.8.9 GPS position (RTU30x1C)

Function

The block checks whether a specified setpoint position has been reached. The system checks whether the setpoint position is within the configured radius.

Optionally, the block outputs the calculated distance between the determined position of the GPS module of the RTU and the setpoint position.

If you select the "System location" setting for the "Position" parameter, the RTU uses the geographical position configured on the "System" WBM page as the setpoint. With the "Manual" setting, setpoints can be entered manually. With the "Variable" setting, the coordinates at the "Latitude" and "Longitude" inputs are used as setpoints. If no permissible values are present at the block via these inputs, the "Error" output is set.

The last received GPS position remains stored in the process image of the RTU even in case of reception problems and is used for calculations. However, the "Max. age of the last position" parameter can be used to limit or display the evaluation of the last known position. If the age of the last known position exceeds the specified value, the "Error" output is set.

Parameters

Parameters	Range of values	Description
Input parameters		
En		Enable parameter, see section Often used parameters (Page 289).
Latitude	Analog memory bit configured as a floating-point number: ±3.402823e-38 .. ±3.402823e+38	Input as basis for the "Latitude" function parameter for the "Variable" setting. Analog memory bit configured as a floating-point number: • North = positive • South = negative

Parameters	Range of values	Description
Longitude	Analog memory bit configured as a floating-point number: ±3.402823e-38 .. ±3.402823e+38	Input as basis for the "Longitude" function parameter for the "Variable" setting. Analog memory bit configured as a floating-point number: • East = positive • West = negative
Function parameters		
Position	• System location • Manual • Variable	Option for setting the geographic coordinates: • System location: Use of the coordinates configured for the RTU on the page "System > General". • Manual: Manual entry of coordinates in the input boxes for "Latitude" and "Longitude". • Variable: Use of the calculated coordinates from the "Latitude" and "Longitude" GPS tags (RTU30x1C).
Latitude	-90 .. 0 .. +90	Latitude Enter the value for the latitude if you have selected the setting "Manual" for the "Position". Degree as number with 6 decimal places: • North = positive • South = negative
Longitude	-180 .. 0 .. +180	Longitude Enter the value for the longitude if you have selected the setting "Manual" for the "Position". Degree as number with 6 decimal places: • East = positive • West = negative
Radius [m]	0 .. 16383	Tolerance radius of the setpoint position in meters
Max. age of last position [s]	0 .. 4294967295	Maximum age of the last position in seconds with which the check is still to be performed without setting the error output. Value 0 means infinite.
Output parameters		
Output	• Digital output / bit memory	Position display: 0 = The last known GPS position is outside the tolerance radius 1 = The last known GPS position is within the tolerance radius

Parameters	Range of values	Description
Distance	Analog memory bit Configured as a floating-point number: ±3.402823e-38 .. ±3.402823e+38 Configured as a counter: 0 .. 4294967295	Calculation of the distance between the last known position and the setpoint position in meters
Error	Digital output / bit memory	Error display: 0: Values at the "Latitude" and "Longitude" input signals are permitted and the GPS position is not older than that specified in the "Max. age of last position" parameter. 1: Values at the "Latitude" and "Longitude" input signals are not permitted and the GPS position is older than that specified in the "Max. age of last position" parameter.

8.8.10 Statistics

Function

The block performs statistical calculations (functions) for a configurable analog signal. The statistical calculation is performed on a configurable value set of up to 256 values of the signal.

Up to two functions for the input signal can be used per block from 9 possible statistical functions.

A maximum of 8 blocks of this type can be configured. A total of 768 values can be configured for all blocks of this type.

With the maximum number of blocks, a total of 16 calculations can be performed for 8 analog signals.

The block uses a shift register which stores the read values of the analog signal. The values are stored in the shift register with the same data type as the original signal at the "Input". Floating-point numbers at the input are stored as floating-point numbers, integer counter values are stored as such.

In each cycle, the block reads a value of the analog signal at the input, stores it in the shift register and uses it for the calculation.

If the "Retentivity" option of the block is disabled, the shift register is cleared when the RTU is restarted or after the configuration has been changed. If this option is enabled, both the values in the shift register and the output values from the last block pass are applied.

With every edge transition 0 → 1 at the "Trigger" input, the value created at that moment at the "Input" is included in the shift register. As long as the shift register is not completely filled, the number of values in the shift register increases. If the shift register contains the configured "Number of values", the oldest value in the shift register is deleted with each new value recorded (FiFo principle).

The function block outputs two output signals for each of the two statistical functions:

- Function 1 or Function 2
  - Value 1 or Value 2
  - Status 1 or Status 2

See the following table for the meaning of the statistical functions of the "Function 1 / Function 2" function parameters and the output parameters.

Table 8-2 Meaning of the "Function 1 / Function 2" function parameters and their output signals

Function	Value	Status
None	0	0
Quantity	Current number of values in the shift register	1
Output	0: Shift register not full y: Oldest value that is currently deleted from the shift register by saving the new value at the input.	0: No value deleted from shift register or invalid value deleted from shift register. 1: Valid value was deleted.
Sum	Sum of all values contained in the shift register	0: No value in the shift register or shift register contains an invalid value. 1: Function yields a valid value.
Minimum	Minimum of all values contained in the shift register	0: No value in the shift register or shift register contains an invalid value. 1: Function yields a valid value.
Maximum	Maximum of all values contained in the shift register	0: No value in the shift register or shift register contains an invalid value. 1: Function yields a valid value.
Arith. mean	The arithmetic mean is the quotient of the sum of all values contained in the shift register and their quantity. $\overline{x} := \frac{1}{n}(x_1 + x_2 + \ldots + x_n)$	0: No value in the shift register or shift register contains an invalid value. 1: Function yields a valid value.
Quad. mean	The square mean is the square root of the quotient of the sum of the squares of all values contained in the shift register and their quantity. $x_{rms} = \sqrt{\frac{1}{n}(x_1^2 + x_2^2 + \cdots + x_n^2)}$	0: No value in the shift register or shift register contains an invalid value. 1: Function yields a valid value.
Standard deviation	The corrected sample variance of all values contained in the shift register is formed as follows: $s = \sqrt{\frac{1}{n-1}\sum_{i=1}^{n}(x_i - \overline{x})^2}$	0: No value in the shift register or shift register contains an invalid value. 1: Function yields a valid value.

Parameters

Parameters	Tag type / range of values	Description
Input parameters		
En		Enable parameter, see section Often used parameters (Page 289).
Trigger	• True / False • Digital input / output / memory bit • STATUS_COM • STATUS_ERROR • STATUS_RUN	With an edge transition 0 → 1, the value pending at the "Input" is included in the shift register. The function parameters are calculated and the outputs are set. See above for information on the behavior of the shift register.
Reset	• True / False • Digital input / output / memory bit • STATUS_COM • STATUS_ERROR • STATUS_RUN	With edge transition 0 → 1, triggered by a digital signal, the shift register is reset. All values are deleted. With the "True" setting, the shift register remains permanently empty. With the "False" setting, the shift register is never reset.
Input	Analog input / memory bit	The analog value pending at the "Input" is entered in the shift register with an edge transition 0 → 1 of the "Trigger" input.
Function parameters		
Number of values	1 .. 256	Maximum number of values in the shift register. The number depends on the number of blocks used, see above.
Function 1	See "Function" in table above.	Statistical function, the result of which is sent to the "Value 1" and "Status 1" outputs.
Function 2	See "Function" in table above.	Statistical function, the result of which is sent to the "Value 2" and "Status 2" outputs.
Retentivity	ON / OFF	• Option enabled: When the configuration is changed or the RTU is restarted, the contents of the shift register and the results are stored in the retentive memory and continue to be used. • Option disabled: When the configuration is changed or the RTU is restarted, the shift register is reset.
Output parameters		
Value 1	Analog memory bit Configured as a floating-point number: ±3.402823 e-38 .. ±3.402823 e+38 Configured as a counter: 0 .. 4294967295	The value calculated by the "Function 1" function parameter. The data type (see Value range) depends on the data type of the processed value.

Parameters	Tag type / range of values	Description
Status 1	Digital output / memory bit	Status of "Value 1": 0 = Value is invalid. 1 = Value is valid and can continue to be used.
Value 2	Analog memory bit Configured as a floating-point number: ±3.402823 e-38 .. ±3.402823 e+38 Configured as a counter: 0 .. 4294967295	The value calculated by the "Function 2" function parameter. The data type (see Value range) depends on the data type of the processed value.
Status 2	Digital output / memory bit	Status of "Value 2": 0 = Value is invalid. 1 = Value is valid and can continue to be used.

8.9 Counter and summation blocks

8.9.1 Counters

Function

The block counts the positive edges at the input parameter "Trigger".

Only via the input parameter "Reset", is the counter reset to 0 or the Initial value.

If the output should not start at the value 0, you can specify a different start value using the function parameter "Initial value".

With the "Direction" function parameter you specify the count direction:

- Incremental (forwards)
- Decremental (backwards)

The current total counted value is output at the "Counted value" output as an unsigned 32-bit value.

Using the function parameter "Turn on threshold", the value for the counted value can be configured and when it is overshot or undershot, the output "Counter status" is set.

Resetting the hardware counter DI0/DI1 converted as event/usage meter

Procedure:

The process image is specified as output at the "Counter" function block

Configure a DM/DI/DQ at the "Reset" input. The other signals do not need to be used. On a positive edge at the "Reset" input, the "Initial value" parameter determines the new value of the process image at the output.

The counter value at the output can be changed via the "Trigger" input parameter. The counter value can be incremented/decremented via the "Direction" function parameter. Enter a value for "Turn on threshold"; can also be evaluated by violation of a threshold at the "Counter status" output.

Note

Value changes at the process image do not trigger the user program, i.e. if the process image violates the turn on threshold in sleep mode, for example, this is output only with the next scheduled or otherwise triggered scan cycle at the "Counter status" output.

Parameters

Parameters	Tag type / range of values	Description
Input parameters		
En		Enable parameter, see section Often used parameters (Page 289).
Trigger	• Digital input / output / memory bit • STATUS_COM • STATUS_ERROR • STATUS_RUN	Counter input; Signal unused The block counts the positive edges (0 → 1) at the input and outputs the total (including the Initial value) at the output. **Inverted parameter:** The block counts the negative edges (1 → 0) at the input and outputs the total (including the Initial value) at the output.
Reset	• True / False • Digital input / output / memory bit • STATUS_COM • STATUS_ERROR • STATUS_RUN	Resets the counter to 0 or the Initial value on a positive edge (0 → 1). With the setting "True" the counter is continuously reset and the output remains permanently set to 0 or the initial value. With the setting "Input unused" or "False", the count is not reset.
Function parameters		
Initial value	0 .. 4294967295	Start value
Turn on threshold	0 .. 4294967295	Threshold value for the counted value. Switches the "Counter status" output depending on the count direction: • Incremental counting: If "Turn on threshold" is reached (exceeded), the "Counter status" output is set to 1. • Decremental counting: If "Turn on threshold" is reached (undershot), the "Counter status" output is set to 1.
Direction	• Decremental • Incremental	• Count down • Count up

Parameters	Tag type / range of values	Description
Retentivity	ON / OFF	If this option is enabled, the count value is saved in the retentive memory. The last value therefore continues to be used when the configuration is changed or a restart of the module takes place. If the option is disabled, the counter is reset to 0 or the initial value when the configuration is changed or a restart of the module takes place. For more information, refer to the section Often used parameters (Page 289).
Output parameters		
Counted value	Analog memory bit • Configured as a floating-point number: 3.402823 e-38 .. 3.402823 e+38 • Configured as a counter: 0 .. 4294967295 • Event counter / usage meter	Tag in which the totaled counted value is output. If there is overflow (4294967295) the counter starts again at zero.
Counter status	Digital output / memory bit	Tag that is set to 1 if the value of "Turn on threshold" is overshot or undershot. The output is reset to 0 if the following events occur: • Incremental counting: Reset if "Turn on threshold" is undershot or if the "Reset" input = 1 or if the counter overflows (value = 0) • Decremental counting: Reset if "Turn on threshold" is overshot

8.9.2 Elapsed time counter

Function

The block counts the operating time after the positive edge change at the "Trigger" input parameter.

Only via the input parameter "Reset", is the counter reset to 0 or the Initial value.

If the output should not start at the value 0, you can specify a different start value using the function parameter "Initial value".

The current total counted value is output at the output as an unsigned 32-bit value in every update cycle.

Parameters

Parameters	Tag type / range of values	Description
Input parameters		
En		Enable parameter, see section Often used parameters (Page 289).
Trigger	• Digital input / output / memory bit • STATUS_COM • STATUS_ERROR • STATUS_RUN	Counter input After the first edge change 0 → 1 and continuous value 1 of "Trigger" the block begins to count the operating time.
Reset	• True / False • Digital input / output / memory bit • STATUS_COM • STATUS_ERROR • STATUS_RUN	Resets the counter to 0 or the Initial value on a positive edge (0 → 1). With the setting "True" the counter is continuously reset and the output remains permanently set to 0. With the setting "Input unused" or "False", the count is not reset. If there is overflow (4294967295) the counter starts again at zero or at the initial value.
Function parameters		
Time base	100 ms 1 s 1 min 1 h	Time base of the uptime output by the block and of the initial value.
Initial value	0 .. 4294967295	Start value
Retentivity	ON/OFF	If this option is enabled, the count value is saved in the retentive memory. The last value therefore continues to be used when the configuration is changed or a restart of the module takes place. If the option is disabled, the counter is reset to 0 or the initial value when the configuration is changed or a restart of the module takes place. For more information, refer to the section Often used parameters (Page 289).
Output parameters		
Uptime	Analog memory bit • Configured as a floating-point number: 3.402823 e-38 .. 3.402823 e+38 • Configured as a counter: 0 .. 4294967295	Tag in which the totaled value of the operating time is output. In the event of configuration as counter and overflow (4294967295), the counter starts again at zero.

8.9.3 Frequency calculation

Function

Each time it is run through the block forms the difference of the current value at the "Counter value" input and the value from the previous run through.

This difference divided by the time (s) between the current and last run through produces the current "Frequency" that is output in Hz (1/s).

The output "Value valid" is set to 1 as soon as the block has been run through twice and the difference could be calculated once.

Via the "Reset" input parameter, the output parameters are reset to 0.

The block performs the calculation in each basic cycle.

Parameters

Parameters	Tag type / range of values	Description
Input parameters		
En		Enable parameter, see section Often used parameters (Page 289).
Reset	• True / False • Digital input / output / memory bit • STATUS_COM • STATUS_ERROR • STATUS_RUN	Resets the two outputs to 0 on a positive edge (0 → 1). With the setting "True", the outputs remain permanently at 0.
Counter value	• Analog input / memory bit • Event counter / usage meter • STATUS_COUNTER	Counter input. Can, for example, be the output of the "Counter" block. For information on processing see above.
Output parameters		
Frequency	Analog memory bit • Configured as a floating-point number: 3.402823 e-38 .. 3.402823 e+38 • Configured as a counter: 0 .. 4294967295	Tag in which the calculated frequency value is output.

Parameters	Tag type / range of values	Description
Value valid	Digital output / memory bit	Tag in which the validity identifier of the frequency value calculated by the block is output: • 1 = The calculated value is valid and can be used. • 0 = The calculated value is invalid.
Error	Digital output / memory bit	Error display: • 0: Block processing completed without errors • 1: Block processing aborted with an error For the meaning, see Often used parameters (Page 289).

8.9.4 Flow calculation

Function

Each time it is run through the block forms the difference of the current value at the "Counter value" input and the value from the previous run through.

This difference divided by the time (s) between the current and last run through produces the current "Flow" (volume flow) as amount per time unit (Q/t) that is included in the calculation of the "Pulse weighting" parameters.

The output "Value valid" is set to 1 as soon as the block has been run through twice and the difference could be calculated once.

Via the "Reset" input parameter, the output parameters are reset to 0.

The block performs the calculation in each basic cycle.

Parameters

Parameters	Tag type / range of values	Description
Input parameters		
En		Enable parameter, see section Often used parameters (Page 289).
Reset	• True / False • Digital input / output / memory bit • STATUS_COM • STATUS_ERROR • STATUS_RUN	Resets the output "Flow" to 0 on a positive edge (0 → 1). If "True" is set constantly, the output is permanently reset to 0. With the setting "Not used" or "False", the output is not reset.

Parameters	Tag type / range of values	Description
Counter value	• Analog input / memory bit • Event counter / usage meter • STATUS_COUNTER	Counter input. Can, for example, be the output of the "Counter" block. For information on processing see above.
Function parameters		
Pulse weighting: number of pulses	1 .. +4294967295	Number of pulses (n) included in the required value for the pulse weighting (Q/n). *
Pulse weighting: amount	3.402823 e-38 .. 3.402823 e+38 Max. 19 characters, display of max. 4 decimal places.	Amount (Q) included in the required value for the pulse weighting (Q/n). *
Output parameters		
Flow	Analog memory bit • Configured as a floating-point number: 3.402823 e-38 .. 3.402823 e+38 • Configured as a counter: 0 .. 4294967295	Tag in which the calculated flow value is output.
Value valid	Digital output / memory bit	Tag in which the validity identifier of the flow value calculated by the block is output: • 1 = The calculated value is valid and can be used. • 0 = The calculated value is invalid or the calculation is not yet completed.
Error	Digital output / memory bit	Error display: • 0: Block processing completed without errors • 1: Block processing aborted with an error For the meaning, see Often used parameters (Page 289).

* Note: The values of the two parameters of the pulse weighting are limited together to 50000. A maximum of 50 Hz are processed over 10 seconds.

8.9.5 Flow totalizer

Function

The function integrates the value at the "Volume flow" input over time.

In every update cycle, the function reads the analog signal at the "Volume flow" input and multiplies the value with the time difference since the last update cycle. Seen mathematically

this forms the integral of the volume flow over time or the area below the curve of the volume flow over time.

Parameters

Parameters	Tag type / range of values	Description
Input parameters		
En		Enable parameter, see section Often used parameters (Page 289).
Reset	• True / False • Digital input / output / memory bit • STATUS_COM • STATUS_ERROR • STATUS_RUN	When there is an edge change 0 → 1 the volume added together up to now is reset to 0. As long as "Reset" is set to 1, the added volume remains = 0. When there is an edge change 1 → 0, the adding is started and the time of the current update cycle is taken as the start time for the calculation in the next cycle. With the setting "True" the input is always active and the block is essentially turned off. With the setting "False" the added volume is never reset. The addition begins with the first update cycle.
Volume flow	Analog input / memory bit	The volume flow to be integrated over time (volume per time unit) The volume unit at the input corresponds to the volume unit at the output. The time unit must correspond to a unit listed in "Time base".
Function parameters		
Time base	• 1/s • 1/min • 1/h	The time base must correspond to the time unit of the volume flow applied to the input. If the volume flow, for example, is created as m^3/h in the block, 1/h must be selected as the time base.
Negative values	• Allow • Ignore • Add amount	Specifies how to handle negative values at the "Volume flow" input. • Allow: Negative values reduce the volume value. • Ignore: Negative values are not included in the addition. • Add amount: Negative values are added to the volume without a sign.
Retentivity	ON/OFF	If this option is enabled, the count value is saved in the retentive memory. The last value therefore continues to be used when the configuration is changed or a restart of the module takes place. If the option is disabled, the counter is reset to 0 or the initial value when the configuration is changed or a restart of the module takes place. For more information, refer to the section Often used parameters (Page 289).
Output parameters		

Parameters	Tag type / range of values	Description
Volumes	Analog memory bit configured as a floating-point number: ±3.402823e-38 .. ±3.402823e+38	Tag in which the volume added together by the block is output. The volume unit at the input corresponds to the volume unit at the output.
Error	True / False	Overshoot or undershoot occurred.

8.9.6 Flow calculation rectangular weir

Function

The block calculates the amount of water (volume flow) flowing over a rectangular overflow weir depending on the measured flow over height according to the formula of Poleni (see also DIN 19557).

$$Q = \frac{2}{3}\,\mu\, b\, \sqrt{2g}\; h^{\frac{3}{2}}$$

Q Flow amount [m^3/s]
μ Flow coefficient (without dimension without including g)
b Width of the inflow [m]
g Gravitational acceleration [m/s^2]
h Flow over height (water level in the head water - weir height) [m]

Figure 8-8 Formula from Poleni for flow calculation of rectangular weirs

The formula applies only to the complete flow without influence of bottom water on the flow amount (backwater).

The formula contains no reduction factor that takes into account influent speed, stream in form and direction or constructions features. Note that such influences can result in significant deviations between the calculated result and the actual flow.

The flow coefficient μ is the correction value for the deviations between the actual and calculated flow. For rectangular weirs the following values are specified depending on the shape of the weir crest:

Table 8-3 Flow coefficient μ for horizontal rectangular weirs *

Crest shape	Illustration	μ
Wide, sharp-edged		0.49 .. 0.51
Wide, rounded edges		0.50 .. 0.55
Completely rounded wide flow Tilted back weir flap with rounded edges of the weir body		0.65 .. 0.73

Crest shape	Illustration	μ
Sharp-edged with ventilation of the stream		0.62 .. 0.64
Rounded, vertical upstream slope, inclined downstream slope (standard profile)		0.75
Roof-shaped, rounded crest		0.79

* Schröder, Euler, Schneider, Knauf: Grundlagen des Wasserbaues, Hydrologie, Hydraulik und Wasserrecht; Werner-Verlag Düsseldorf (1994)

Enter the gravitational acceleration g for your location. For central Europe the value is approximately 9.81. On the Internet you will find tables and programs for specifying g for many places.

Parameters

Parameters	Tag type / range of values	Description
Input parameters		
En		Enable parameter, see section Often used parameters (Page 289).
Height (h)	Analog input / memory bit	Measured height in meters (m) With a negative value the output "Error" is set to 1.
Reset	True / False • Digital input / output / memory bit • STATUS_COM • STATUS_ERROR • STATUS_RUN	When there is an edge change 0 → 1 the flow added together up to now is reset to 0. As long as "Reset" is set to 1, the added flow remains = 0. When there is an edge change 1 → 0, the adding is started and the time of the current update cycle is taken as the start time for the calculation in the next cycle. The input has no influence on "Drainage (Q)". If "True" is set permanently the addition is turned off. If "False" is set permanently the added up amount of flow is never reset. The addition begins with the first update cycle of the RTU.
Function parameters		
Width (b)	0 .. 10000 Display of max. 4 decimal places.	Flow width in meters [m]
Flow coefficient (μ)	0.0000 .. 0.9999 Display of max. 4 decimal places.	Flow coefficient depending on the crest shape
Gravitational acceleration (g)	9.0000 .. 9.9999 Display of max. 4 decimal places.	Effective gravitational acceleration [m/s^2]

Parameters	Tag type / range of values	Description
Limit value	0 .. 3.402823e+38 Max. 19 characters, display of max. 4 decimal places	Drainage limit value (high) in m^3/s If the limit value is exceeded the output "Alarm" is set to 1. As soon as the limit value is undershot, the output "Alarm" is set to 0.
Retentivity	ON/OFF	If this option is enabled, the count value is saved in the retentive memory. The last value therefore continues to be used when the configuration is changed or a restart of the module takes place. If the option is disabled, the counter is reset to 0 or the initial value when the configuration is changed or a restart of the module takes place. For more information, refer to the section Often used parameters (Page 289).
Output parameters		
Drainage (Q)	Analog memory bit configured as a floating-point number: 3.402823e-38 .. 3.402823e+38	Tag in which the current drainage (m^3/s) calculated by the block is output.
Flow volume	Analog memory bit configured as a floating-point number: 3.402823e+38	Calculated added flow volume (m^3) since the last reset.
Alarm	Digital output / memory bit	Alarm display: • 0: Current drainage Q lower than the drainage limit value • 1: Current drainage Q equal to or higher than the drainage limit value You can for example use the Alarm to display flooding (incomplete flow) or other evaluations.
Error	Digital output / memory bit	Error display: • 0: Block processing completed without errors • 1: Negative height

8.9.7 Silo volume calculation

Function

From the fill level the function block calculates the volume depending on the silo geometry.

The length units at the "Fill height" input and at the four dimension function parameters must be identical. For example, if the fill level is specified in meters (m), the diameters and the two height outputs must also be specified in meters (m). In this case, the result is output in cubic meters (m^3).

As an option two limit values can be programmed for a full or empty message.

Parameters

Parameters	Tag type / range of values	Description
Input parameters		
En		Enable parameter, see section Often used parameters (Page 289).
Fill height	Analog input / bit memory	The value of the input is included in the calculation of the fill volume. The fill height must be between 0 and the sum of the height of the cylindrical section and the height of the cone-shaped section of the silo. Otherwise the Error output is set and the result of the calculation cannot be used. Make sure you have the same length unit at the input and in the function parameters.
Function parameters		
Diameter	0 .. 3.402823e+38 Max. 19 characters, Display of max. 4 decimal places	Diameter of the silo Make sure you have the same length unit at the input and in the function parameters.
High cylinder	0 .. 3.402823e+38 Max. 19 characters, Display of max. 4 decimal places	Height of the cylindrical section of the silo Make sure you have the same length unit at the input and in the function parameters.
High cone	0 .. 3.402823e+38 Max. 19 characters, Display of max. 4 decimal places	Height of the conical section of the silo. With a blunt cone, the height of the cut-off cone is specified. Make sure you have the same length unit at the input and in the function parameters.
Truncated cone diameter	0 .. 3.402823e+38 Max. 19 characters, Display of max. 4 decimal places	Lower diameter of the conical section of the silo. Make sure you have the same length unit at the input and in the function parameters.
Volume "full" [%]	0 .. 100	If this value is reached or exceeded (percentage of the max. silo volume) the output "Full" is set to 1. Below this value the "Full" output = 0. The value of "Volume full" must be higher than the value of "Volume empty".
Volume empty [%]	0 .. 100	If this value is undershot (percentage of the min. silo volume) the output "Empty" is set to 1. Above this value the "Empty" output = 0. The value of "Volume full" must be higher than the value of "Volume empty".
Output parameters		

Parameters	Tag type / range of values	Description
Fill volume	Analog memory bit configured as a floating-point number: 3.402823e-38 .. 3.402823e+38	Tag in which the fill volume calculated by the block is output. The unit is the third power of the length unit of the input and the function parameters.
Full	Digital output / bit memory	When the fill volume reaches or exceeds the percentage "Volume full" the "Full" output is set to 1. Below this the "Full" output = 0.
Empty	Digital output / bit memory	When the fill volume reaches or undershoots the percentage "Volume empty" the "Empty" output is set to 1. Above this the "Empty" output = 0.
Error	Digital output / bit memory	Error display: • 0: Block processing completed without errors • 1: The fill height is not between 0 and the sum of the height of the cylindrical and the cone-shaped section of the silo.

8.10 Blocks for messages

8.10.1 Sending SMS messages

Function

When a configurable event occurs, transfers an SMS message for sending.

Note

Check SMS service in mobile wireless network

Check with your network provider to find out whether the SMS function is supported in your mobile wireless network. In NB-IoT or LTE-M networks, in particular, the SMS function is not always supported by the network provider.

Parameters

Parameters	Tag type / range of values	Description
Input parameters		
En		Enable parameter, see section Often used parameters (Page 289).

Parameters	Tag type / range of values	Description
Trigger	• True / False • Digital input / output / memory bit • STATUS_COM • STATUS_ERROR • STATUS_RUN	Event (edge change 0 → 1), that triggers the creation of the message. The input must be reset to 0 by the user.
Send Immediately	• True / False • Digital input / output / memory bit • STATUS_COM • STATUS_ERROR • STATUS_RUN	When there is an edge change 0 → 1 the message is transferred for sending. With the setting "True", the message is always transferred immediately for sending. With the setting "Input unused" or "False", the message is transferred for sending when the RTU establishes the next mobile wireless connection. The input parameter must be reset to 0 by the program.
Function parameters		
Recipient	"Recipient group"	Selection of the user groups configured in "Users / groups"
Text	"Texts"	Selection of a message text configured in "Tags" > "Texts"
Output parameters		
Done	Digital output / memory bit	Status display: • 0: Message could not be transferred to the transfer buffer. The buffer is possibly full. • 1: Message could be transferred successfully to the transfer buffer.
Error	Digital output / memory bit	Error display: • 0: Block processing completed without errors • 1: Block processing aborted with an error SMS message could not be saved. See also section Often used parameters (Page 289).

8.10.2 Send e-mail

Function

When a configurable event occurs, transfers an e-mail message for sending.

Parameters

Parameters	Tag type / range of values	Description
Input parameters		
En		Enable parameter, see section Often used parameters (Page 289).

Parameters	Tag type / range of values	Description
Trigger	• True / False • Digital input / output / memory bit • STATUS_COM • STATUS_ERROR • STATUS_RUN	Event that triggers the creation of the message.
Send Immediately	• True / False • Digital input / output / memory bit • STATUS_COM • STATUS_ERROR • STATUS_RUN	When there is an edge change 0 → 1 the message is transferred for sending. With the setting "True", the message is always transferred immediately for sending. With the setting "Not used" or "False", the message is transferred for sending when the RTU establishes the next connection to the partner. The input parameter must be reset to 0 by the program.
Function parameters		
Recipient	"Recipient group"	Selection of the user groups configured in "Users / groups"
Text	"Texts"	Selection of a message text configured in "Tags" > "Texts"
Attachment	• No attachment • Entire diagnostics buffer • Current log file • Current process image	You have the option of attaching a file stored on the RTU to the e-mail.
Anhang gezippt	ON/OFF	Adds the file to the attachment as a compressed zip archive.
Output parameters		
Done	Digital output / memory bit	Status display: • 0: Message could not be transferred to the transfer buffer. The buffer is possibly full. • 1: Message could be transferred successfully to the transfer buffer.
Error	Digital output / memory bit	Error display: • 0: Block processing completed without errors • 1: Block processing aborted with an error E-mail could not be saved. See also section Often used parameters (Page 289).

8.10.3 FTP file transfer

Function

When a configurable event occurs ("Trigger" input), the function block enters an FTP file transfer in a transfer list. This transfer list can hold up to 12 FTP transfers.

Before using the block, you need to configure the FTP server and the server path on the WBM page "Services > FTP". Only one FTP server can be configured.

Each block can use one of up to 8 different server paths, so that the data can be saved in a structured form on the FTP server for further evaluation.

Parameters

Parameters	Tag type / range of values	Description
Input parameters		
En		Enable parameter, see section Often used parameters (Page 289).
Trigger	True / False • Digital input / output / memory bit • STATUS_COM • STATUS_ERROR • STATUS_RUN	Event that triggers the entry of the FTP transfer in the transfer list. When there is an edge change 0 → 1 the transfer job is entered in the transfer list as long as there is still room for it. The input parameter needs to be reset to 0 by the program.
Send Immediately	True / False • Digital input / output / memory bit • STATUS_COM • STATUS_ERROR • STATUS_RUN	With the setting "True" when entering an FTP transfer in the transfer list the communication mode is started immediately if the RTU is not already in the communication mode. The transfer list is processed immediately. FTP transfers saved previously in the transfer list are also processed. With the setting "Not used" or "False", the FTP transfer is kept in the transfer list until the RTU is in the communication mode for some other reason. This can be a planned communication mode or another FTP transfer with the setting "Send immediately" = TRUE).
Function parameters		
File	• Entire diagnostics buffer • Current log file • Current process image	This parameter specifies which data is transferred to the FTP server during the FTP transfer.
Compressed and encrypted	ON/OFF	Transfers the file as a compressed ZIP archive. As an option, the ZIP archive can also be encrypted (see WBM: "Services > FTP").
Server path	Path 1 .. 8	Selection of one of the FTP server paths specified in "Services > FTP". If you do not make a selection (not used) the standard path of the FTP server will be used.
Append	ON/OFF	With the setting "ON" the transferred file is appended to an existing file of the same name on the server. With the setting "OFF" an existing file that may be on the FTP server is replayed. If the file is transferred as a ZIP archive, the option "Append" cannot be used.

Parameters	Tag type / range of values	Description
Transfer delta	ON/OFF	Setting can only be activated if "Current log file" is selected as the file and the "Append" option is activated. With the setting "ON", the RTU saves the position within the last successfully transferred log file and, on a new transfer, only transfers the difference between the last successfully transferred log file and the current log file. The option cannot be used in connection with the active setting "Compressed and encrypted". With the "OFF" setting, the complete current log file is sent to the FTP server with every transfer.
Transfer header on every transfer	ON/OFF	Setting can only be activated if "Current log file" is selected as the file and the "Append" and "Transfer delta" options are activated. With the setting "ON", the RTU saves the position within the last successfully transferred log file and, on a new transfer, only transfers the difference between the last successfully transferred log file and the current log file. With each transfer, the header of the log file is inserted before the difference. The option cannot be used in connection with the active setting "Compressed and encrypted". With the "OFF" setting, only the difference between the last successfully transferred log file and the current log file is sent with each transfer.
Output parameters		
Done	• Digital output / memory bit	Status display: • 0: FTP transfer could not be entered in the transfer list. The list is possibly full. • 1: FTP transfer successfully entered in the transfer list.
Error	• Digital output / memory bit	Error display: • 0: Block processing completed without errors • 1: Block processing aborted with an error. FTP transfer could not be saved. See also section Often used parameters (Page 289).

8.11 Switch and relay blocks

8.11.1 Latching relays

Function

The input parameters "Set" and "Reset" set the output to 1 or 0:

- Set
  A positive edge (0 → 1) sets the output to 1.
- Reset
  A positive edge (0 → 1) sets the output to 0.

The parameters "Set" and "Reset" both have a latching function.

When "Set" and "Reset" have the same value (both = 0 or both = 1) the switching of the output is controlled by the function parameter "RS/SR priority":

- SR: The output is set to 1.
- RS: The output is set to 0.

Table 8-4 Status table

RS/SR priority	Value of "Reset"	Value of "Set"	Value of the output	Remark
RS / SR	0	0	-	The value of the output remains unchanged.
RS / SR	1	0	0	Value of the output regardless of RS/SR priority
RS / SR	0	1	1	Value of the output regardless of RS/SR priority
RS	1	1	0	
SR	1	1	1	

Diagrams

The two following diagrams in which the RS/SR priority is programmed differently are examples showing the effect on the output.

The blue arrows indicate value changes of the output Q that are caused by the programming of the RS/SR priority.

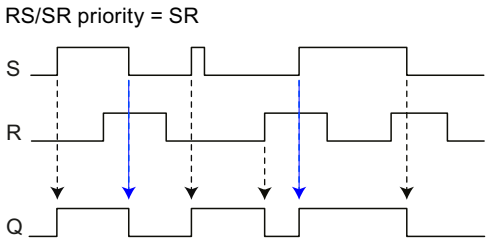

S Set
R Reset
Q Output

Figure 8-9 Switching diagram of a block "Latching relay", RS/SR priority = SR

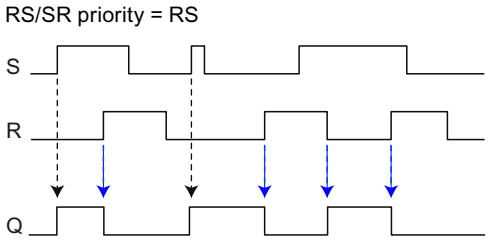

S Set
R Reset
Q Output

Figure 8-10 Switching diagram of a block "Latching relay", RS/SR priority = RS

Parameters

Parameters	Tag type / range of values	Description
Input parameters		
En		Enable parameter, see section Often used parameters (Page 289).
Set	• True / False • Digital input / output / memory bit • STATUS_COM • STATUS_ERROR • STATUS_RUN	Sets the output to 1 on a positive edge (0 → 1). With the setting "True", the output remains permanently at 1. Resetting via the "Reset" input is then only possible when "RS/SR priority" = RS.
Reset	• True / False • Digital input / output / memory bit • STATUS_COM • STATUS_ERROR • STATUS_RUN	Resets the "Set" input to 0 on a positive edge (0 → 1). With the setting "True", "Set" is permanently reset if the "RS/SR priority" = RS. The output remains permanently set to 0. With the setting "True", "Set" is processed if the "RS/SR priority" = SR. With the setting "False", the "Set" input is not reset.
Function parameters		

Parameters	Tag type / range of values	Description
RS/SR priority	• SR • RS	• SR If "Set" and "Reset" have the same value, "SR" causes the output to be set to 1. • RS If "Set" and "Reset" have the same value, "RS" causes the output to be set to 0.
Output parameters		
Output	Digital output / memory bit	Tag for the output.

8.11.2 Current impulse relay

Function

The input parameters "Set" and "Reset" set the output to 1 or 0:

- Set
  A positive edge (0 → 1) sets the output to 1.
- Reset
  A positive edge (0 → 1) sets the output to 0.

As with the latching relay (see above) the parameters "Set" and "Reset" both have a latching function.

If "Set" and "Reset" are both = 0, the output is set to 1.

If "Set" and "Reset" are both = 1, switching the output is controlled by the "RS/SR priority" function parameter:

- SR: The output is set to 1.
- RS: The output is set to 0.

The "Trigger" input causes a status change at the output regardless of its previous status.

- Output = 0: A positive edge at the "Trigger" input sets the output to 1.
- Output = 1: A positive edge at the "Trigger" input sets the output to 0.

The "Trigger" input has the function of a button. A tag can be connected to its input that generates short pulses (current impulses).

Diagram

The following diagram shows an example of the effect on the output.

The blue arrow indicates a value change of the output Q that is caused by the programming of the RS/SR priority.

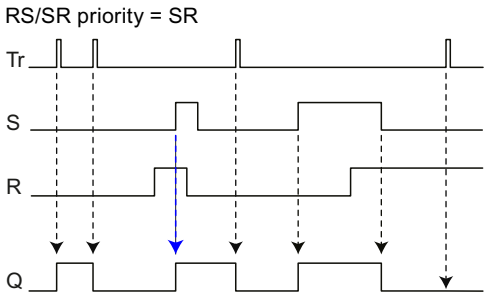

Tr Trigger
S Set
R Reset
Q Output

Figure 8-11 Switching diagram of a block "Current impulse relay", RS/SR priority = SR

Parameters

Parameters	Tag type / range of values	Description
Input parameters		
En		Enable parameter, see section Often used parameters (Page 289).
Set	• True / False • Digital input / output / memory bit • STATUS_COM • STATUS_ERROR • STATUS_RUN	Sets the output to 1 on a positive edge (0 → 1). With the setting "True", the output remains permanently at 1. Resetting via the "Reset" input is then only possible when "RS/SR priority" = RS. With the setting "Unused" or "False", the output is only controlled by the inputs "Reset" and "Trigger".
Reset	• True / False • Digital input / output / memory bit • STATUS_COM • STATUS_ERROR • STATUS_RUN	On a positive edge (0 → 1) resets the output to 0 when "Set" = 0 or when the "RS/SR priority" = RS. With the setting "True" "Set" is permanently reset and the output remains permanently set to 0. With the setting "unused" or "False", the "Set" input is not reset. With the setting "Unused" or "False", the output is only controlled by the inputs "Reset" and "Trigger".
Trigger	• True / False • Digital input / output / memory bit • STATUS_COM • STATUS_ERROR • STATUS_RUN	The edge change 0 → 1 of "Trigger" has the following effect: • When "Set" and "Reset" = 0, the output is set to 1. • When "Set" and "Reset" = 1 and the "RS/SR priority" = SR, the output is set to 1. • When "Set" and "Reset" = 1 and the "RS/SR priority" = RS, the output is set to 0. • If only "Set" = 1, the output remains at 1. • If only "Reset" = 1, the output remains at 0. The edge change 1 → 0 of "Trigger" has no effect.
Function parameters		

Parameters	Tag type / range of values	Description
RS/SR priority	• SR • RS	• SR If "Set" and "Reset" have the same value, "SR" causes the output to be set to 1. • RS If "Set" and "Reset" have the same value, "RS" causes the output to be set to 0.
Output parameters		
Output	Digital output / memory bit	Tag for the output.

8.11.3 Wiping relay

Function

When there is an edge change 0 → 1 at the "Trigger" input, at the output a signal of selectable duration is generated.

Two types of function can be programmed:

- **Start value = "Pulse"**
  A change from 0 to 1 at the "Trigger" input starts the first pulse and the output is set to 1.
  When the time set in the parameter "Pulse duration" is reached, the output is reset to 0.
  If the number of cycles is > 1, the time "Interpulse period" starts to run and when it is completed a new pulse begins again.
  Depending on the setting "End", the pulse sequence runs as long as the "Trigger" signal is set or the pulse sequence has been completely processed.
- **Start value = "Pause"**
  A change from 0 to 1 at the "Trigger" input starts the interpulse period and the output is set to 0.
  After the "Interpulse period" has elapsed, the "Pulse duration" time is started and the output is set to 1.
  After the "Pulse duration" has elapsed, the output is reset to 0.
  If the number of cycles is > 1, the "Interpulse period" starts again followed by a new pulse.
  Depending on the setting "End", the pulse sequence runs as long as the "Trigger" signal is set or the pulse sequence has been completely processed.

Parameters

Parameters	Tag type / range of values	Description
Input parameters		
En		Enable parameter, see section Often used parameters (Page 289).

Parameters	Tag type / range of values	Description
Trigger	• True / False • Digital input / output / memory bit • STATUS_COM • STATUS_ERROR • STATUS_RUN	When there is an edge change 0 → 1 a new pulse sequence begins. With the setting "True", the pulse sequence set in the parameters runs precisely once after the RTU starts up or after a new configuration has been adopted. With the setting "False" the output is never set.
Pulse duration (ms)	Analog input / memory bit	Dynamic pulse duration in milliseconds If the signal is busy, the input value is used as a pulse duration for the function block. With the default setting "Signal unused", the configured function parameter of the function block is used.
Interpulse period (ms)	Analog input / memory bit	Dynamic interpulse period in milliseconds If the signal is busy, the input value is used as a interpulse period for the function block. With the default setting "Signal unused", the configured function parameter of the function block is used.
Cycles	Analog input / memory bit	Dynamic number of pause/pulse cycles If the signal is busy, the input value is used as the number of pause/pulse cycles of the function block. With the default setting "Signal unused", the configured function parameter of the function block is used.
Function parameters		
Pulse duration (ms)	100 .. 999999999	Pulse duration in milliseconds
Interpulse period (ms)	0 .. 999999999	Pause between two pulses in milliseconds If the number of pulses is > 1 or the Start value "Pause" is selected, the Interpulse period must be ≥ 100 ms.
Cycles	1 .. 999999999	Specifies the number of pause/pulse cycles (pulse sequence).
Start value	• Pulse • Pause	• With "Pulse" the pulse sequence starts with a "1" at the output. • With "Pause" the pulse sequence starts with a "0" at the output.
End	• Trigger • Time	• With "Trigger", the pulse sequence ends as soon as the "Trigger" input changes to 0 or the configured number of cycles is reached. • With "Time" the pulse sequence ends when it has run completely.
Output parameters		
Output	Digital output / memory bit	Tag in which the value calculated by the block is output.

8.11.4 Time relay

Function

The block has the function of a time relay. Application example: Staircase light switch

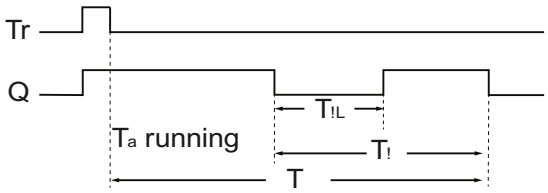

Tr	Trigger
Q	Output
T_a	Current time
T	Off delay
$T_!$	Prewarning
$T_{!L}$	Interruption

Figure 8-12 **Operating diagram**

With the input signal "Trigger" (0 → 1) block processing is started edge-triggered and the output of the block is set to 1. If the trigger changes 1 → 0 (for example due to releasing a button), the "Off delay" begins to run.

After the "Off delay" has elapsed, the output is reset.

With the signal "Reset" the output can be reset to 0 before the "Off delay" has elapsed.

As an option before the Off delay elapses a warning signal can be output via the "Prewarning" parameter. This indicates the turning off of the output by resetting the output from 1 to 0 for the duration of the "Interruption".

The prewarning time is calculated from "Off delay" minus "Prewarning" ($T - T_!$)

The optional output "Warning" is set to 1 at the time of the "Prewarning". The "Interruption" has no influence on the "Warning" output.

Parameters

Parameters	Tag type / range of values	Description
Input parameters		
En		Enable parameter, see section Often used parameters (Page 289).

Parameters	Tag type / range of values	Description
Trigger	True / False • Digital input / output / memory bit • STATUS_COM • STATUS_ERROR • STATUS_RUN	If there is an edge change 0 → 1 the output is set to 1. When there is an edge change 1 → 0 the Off delay is started. After the Off delay has elapsed, the output is set to 0. With the setting "True" the output is always active. With the setting "False" the output is never set. If the "Trigger" input is switched on and off again while T_a is running, T_a is reset
Reset	True / False • Digital input / output / memory bit • STATUS_COM • STATUS_ERROR • STATUS_RUN	When there is an edge change 0 → 1 Off delay is stopped and the output is set to 0. As long as "Reset" is set to 1, the value of "Trigger" is ignored. When there is an edge change 1 → 0 the block can be processed again. With the setting "True" the input is always active and the block is essentially turned off. With the setting "False" the Off delay is never reset.
Off delay (ms)	• Analog input / memory bit	Dynamic delay time in milliseconds If the signal is busy, the input value is used as the delay time of the function block. With the default setting "Signal unused", the configured function parameter of the function block is used.
Prewarning (ms)	• Analog input / memory bit	Dynamic time of the prewarning in milliseconds If the signal is busy, the input value is used as the time of the prewarning of the function block. With the default setting "Signal unused", the configured function parameter of the function block is used.
Interruption (ms)	• Analog input / memory bit	Dynamic duration of the interruption in milliseconds If the signal is busy, the input value is used as the duration of the interruption of the function block. With the default setting "Signal unused", the configured function parameter of the function block is used.
Function parameters		
Off delay (ms)	100 .. 999999999	Delay in milliseconds
Prewarning (ms)	0 .. 999999999	Time of the Prewarning in milliseconds The sum of Prewarning and Interruption must be lower than the Off delay.
Interruption (ms)	0 .. 999999999	Duration of the interruption in milliseconds The "Interruption" may not exceed the "Prewarning". An interruption of 0 is only allowed when: • the "Warning" output is connected or • Pre-warning = 0 and the "Warning" output is not connected.
Output parameters		

Parameters	Tag type / range of values	Description
Output	• Digital output / memory bit	Tag in which the value calculated by the block is output.
Warning	• Digital output / memory bit	The optional output is set to 1 at the start of the pre-warning. Along with "Output" changes to 0.

8.12 Other blocks

8.12.1 Operating status

Function

This block enables you to change the operating state of the module. With the edge transition 0 → 1 at the "Trigger" input, the configured operating state transition is initiated. This can be a restart, shutdown to the safe state or restoration of the factory settings.

The operating state change is initiated immediately.

Note

Consequences

Note the following points:

- Changing the operating state stops the execution of the program and the other running functions.
- After "Shut down", the RTU can only be put back into operation locally via the WKUP/RESET button or by disconnecting and plugging in the power supply.

Note

Deletion of configuration data on restore of factory settings

When restoring the factory settings, all configuration data of the RTU is deleted. Deleting involves the following data:

- User names and passwords
- Configured PIN of the SIM card
- Event buffer
- Diagnostics buffer
- Standard configuration file on the SD card
- Diagnostics buffer on the SD card
- Retentive counter values
- Battery usage values

Configuration and log files stored manually on the SD card are not deleted.

After the reset the RTU is restarted. After that, the RTU can only be reached via the LAN interface under the DNS name "simatic.rtu" or under the IP address 192.168.0.3.

Parameters

Parameters	Tag type / range of values	Description
Input parameters		
En		Enable parameter, see section Often used parameters (Page 289).
Trigger	• Digital input / output / memory bit • STATUS_COM • STATUS_ERROR	The configured operating state transition is initiated with an 0 → 1 edge transition.
Function parameters		
Function	• Restart • Shut down • Factory settings	Function that should be executed for the 0 → 1 edge transition at the "Trigger" input.
Output parameters		
Error	Digital output / memory bit	• Always 0 • Error display for "SD card replacement" function: – 0: Inserted card is logged off at the end of the update cycle – 1: No card inserted

8.12.2 Operating mode

Function

This block enables the operating mode of the module to be changed by the program. With the edge transition 0 → 1 at the "Trigger" input, the configured operating mode transition is initiated.

Functions for service mode

The following functions can be used for control in service mode, e.g. for maintenance purposes:

- Start service mode
  Service mode is started for the configured minimum duration and the LAN interface is enabled.
- End service mode
  Service mode is ended.

Functions for communication mode

RTU communication can be controlled via the following functions in the user program:

- Start communication mode
  The communication mode is started for the configured minimum duration. All configured interfaces and connections are established and buffered data is transferred.
- End communication mode
  Stops the communication mode of the RTU when all connections are successfully established and all data has been sent.
- Abort communication
  All interfaces are disabled immediately

The minimum duration is not considered for "End service mode", "End communication mode" and "Abort communication mode".

The error output is enabled if a function could not be executed, e.g. "End communication mode", when buffered data is still present.

Parameters

Parameters	Tag type / range of values	Description
Input parameters		
En		Enable parameter, see section Often used parameters (Page 289).
Trigger	• Digital input / output / memory bit • STATUS_COM • STATUS_ERROR • STATUS_RUN	With the edge transition 0 → 1 at the "Trigger" input, the configured function is started.
Function parameters		

Parameters	Tag type / range of values	Description
Function	• Start service mode • End service mode • Start communication mode • End communication mode • Abort communication mode	Function that should be executed for the 0 → 1 edge transition at the "Trigger" input.
Minimum duration (s)	• 10...3600	Only relevant for the functions "Start service mode" and "Start communication mode". When the functions are used, the operating mode is maintained for this time period.
Output parameters		
Error	Digital output / memory bit	• 0: No error • 1: Operating mode transition could not be performed.

8.12.3 Formula

Function

The block calculates the result of the specified mathematical or Boolean expression as a factor of the input tags a .. d.

Boolean terms can also be mixed with mathematical terms. The Boolean values TRUE and FALSE are used as 1 and 0 in the mathematical expressions, and values not equal to 0 are used as TRUE and equal to 0 are used as FALSE in the Boolean expressions.

Table 8-5 **Permissible operands within the expression**

Operand	Description
+	Addition
-	Subtraction/sign reversal
*	Multiplication
/	Division
^	Exponentiation
%	Modulo
!	Not
!=	Not equal
==	Equal
<	Less than
<=	Less or equal
>	Greater than
>=	Greater or equal
&&	And
||	Or

Table 8-6 **Permissible constants within the expression**

Constant	Description
pi	Number π
e	Euler's number *e*

Table 8-7 **Permissible functions within the expression**

Function	Description
abs(a)	Amount of a
acos(a)	Arccosine of a[1)]
asin(a)	Arcsine of a[1)]
atan(a)	Arctangent of a[1)]
atan2(a,b)	Arctangent with 2 arguments a[1)] and b[1)]
ceil(a)	Rounding up of a
cos(a)	Cosine of a[1)]
cosh(a)	Hyperbolic cosine of a[1)]
exp(a)	Exponential function of a to the base e
fac(a)	Faculty of a[2)]
floor(a)	Rounding down of a
ln(a)	Natural logarithm of a
log(a)	Logarithm of a to the base 10
log10(a)	Logarithm of a to the base 10
ncr(a,b)	Binomial coefficient of a[2)] over b[2)], number of combinations of b elements from the set a without consideration of sequence. $\binom{a}{b} = \frac{a!}{b!\,(a-b)!}$
npr(a,b)	Number of permutations of b[2)] elements from the set a[2)] including repetitions. $P(a,b) = \frac{a!}{(a-b)!}$
pow(a,b)	Power b of a
sin(a)	Sine of a[1)]
sinh(a)	Hyperbolic sine of a[1)]
sqrt(a)	Square root of a
tan(a)	Tangent of a[1)]
tanh(a)	Hyperbolic tangent of a[1)]

1) Values for trigonometric functions in rad

2) Only defined for natural numbers. Floating-point numbers are rounded down to the next whole number.

Parameters

Parameters	Tag type / range of values	Description
Input parameters		
En		Enable parameter, see section Often used parameters (Page 289).
Input a .. d	• True / False • Digital input / output / memory bit • STATUS_COM • STATUS_ERROR • STATUS_RUN • Analog input / memory bit • Event counter / usage meter	The value of input a is used as a in the expression, input b as b etc.
Function parameters		
Expression	Mathematical or Boolean expression with up to 28 characters	Examples: • sqrt(a)*b/3 Square root of a multiplied by b divided by 3 • (a>5.2)||(b>=c) Output is TRUE (1) if the value at input a is greater than 5.2 or the value at input b is greater than or equal to the value at output c • a^b^c a to the power of b, result to the power of c • cos(c/d) Cosine from quotient of c divided by d in rad
Output parameters		
Output	Digital output / memory bit Analog memory bit configured as: • Floating point number: ±3.402823 e-38 .. ±3.402823 e+38 • Counter: 0 .. 4294967295	Tag in which the result calculated by the block is output.
Error	Digital output / memory bit	Error display: • 0: Block processing completed without errors • 1: Block processing aborted with an error For the meaning, see Often used parameters (Page 289).

8.12.4 Script

Function

The function block executes the script entered. If the RTU detects invalid syntax when executing the script, an error message is displayed in the diagnostics buffer and below the script block in the WBM.

The following functions are supported by the script block:

- You can use the "FUNC" command to define your own functions with up to 4 parameters and call up these functions as required in the program.
- You can create and use any auxiliary variables with the "VAR" command.
  The data type is determined automatically. When initializing with a fixed value without decimal places (e.g. "45"), the type becomes U32.
  If a value with decimal places (e.g. "1.33") or a value with a negative sign (e.g. "-20") is used, the type becomes F32.
  When initializing with a function, the type of the return value is adopted.

  Note

  Reusing tag values

  Tags are newly created and initialized with each scan cycle. If tag values in the script are to survive the script run and be reused in the next run, they must be saved in the PLC image via an output.

- All functions already known from the "Formel" program block are available.
- Script blocks previously saved in the "Library" can be embedded using the "INCLUDE" command. Example: `INCLUDE "Script1"`
  For more information on the "Library", see section Library (Page 243).

Supported control statements

- IF
- ELSEIF
- ELSE
- WHILE
- RETURN

The opening curly bracket "{" must be on the same line as the control statement. An opening curly bracket must not be at the beginning of a line.

The subsequent control statements "ELSE" and "ELSEIF" must always be placed directly after the closing curly bracket of the previous block.

Supported formatting

The following formatting is supported for better readability:

- Space
- Empty line
- Tabs

- Optional semicolon at the end of the line
- Comments
  Comments are marked with a preceding hash sign "#".
  Example: `# Comment`

Table 8-8 Permissible operands within the script

Operand	Description
+	Addition
-	Subtraction/sign reversal
*	Multiplication
/	Division
^	Binary Exclusive Or[1) 2)]
%	Modulo
!	Not
!=	Not equal
==	Equal
<	Less than
<=	Less or equal
>	Greater than
>=	Greater or equal
&&	Logical And
||	Logical Or
&	Binary And[2)]
|	Binary Or[2)]
>>	Bit shift operation right[2)]
<<	Bit shift operation left[2)]

1) Functionality deviating from the "Formula" block
2) Only defined for integers, for floating point numbers this results in NaN ("Not a Number")

Table 8-9 Permissible constants within the script

Constant	Description
pi	Number π
e	Euler's number e

Table 8-10 Predefined functions available in the script

Function	Description
abs(a)	Amount of a
acos(a)	Arccosine of a[1)]
asin(a)	Arcsine of a[1)]
atan(a)	Arctangent of a[1)]

atan2(a,b)	Arctangent with 2 arguments a[1] and b[1]
ceil(a)	Rounding up of a
cos(a)	Cosine of a[1]
cosh(a)	Hyperbolic cosine of a[1]
exp(a)	Exponential function of a to the base e
fac(a)	Faculty of a[2]
floor(a)	Rounding down of a
ln(a)	Natural logarithm of a
log(a)	Logarithm of a to the base 10
log10(a)	Logarithm of a to the base 10
ncr(a,b)	Binomial coefficient of a[2] over b[2], number of combinations of b elements from the set a without consideration of sequence.
npr(a,b)	Number of permutations of b[2] elements from the set a[2] including repetitions.
pow(a,b)	Power b of a
sin(a)	Sine of a[1]
sinh(a)	Hyperbolic sine of a[1]
sqrt(a)	Square root of a[1]
tan(a)	Tangent of a[1]
tanh(a)	Hyperbolic tangent of a[1]
qual(a)	Returns the quality value of the tag a. The value 0 stands for GOOD. All values other than 0 are bit-coded: • Bit0 (value 0x001): CFG, e.g. output(x) called but no x assigned to the block • Bit1 (value 0x002): TYPE, e.g. incorrect tag type configured • Bit2 (value 0x004): NSET, e.g. tag not initialized • Bit3 (value 0x008): OOR, e.g. AI overrange • Bit4 (value 0x010): SUBST, i.e. a tag is not available (e.g. from Modbus or an AI with wire break) • Bit5 (value 0x020): NaN, floating-point operation such as Div0 or root of negative values • Bit6 (value 0x040): INF, floating-point operation with result infinity
in(x)	Returns the value of the tag connected to input x.
out(x,a)	Transfers the value a to the tag connected to output x.
uint(x)	Converts the type of tag x into an "unsigned integer", i.e. an unsigned integer like a tag of the "event counter" type. This is useful, for example, if a calculated value is to be used as a floating point number for bit operations.
float(x)	Converts the type of the tag x into a "floating point variable", i.e. a floating point number like a tag of the "Usage meter" type.

[1] Values for angle functions in Rad
[2] Only defined for natural numbers. Floating-point numbers are rounded down to the next whole number.

Parameter

Parameter	Tag type / range of values	Description
Input parameters		

En		Enable parameter, see section Often used parameters (Page 289).
Input 1 .. 4	• True / False • Digital input / output / bit memory • STATUS_COM • STATUS_ERROR • STATUS_RUN • Analog input / bit memory • Event counter / Usage meter	The value of input 1 can be processed in the script by calling the "in(1)" function, input 2 by "in(2)" and so on.
Function parameters		

Script	Script with up to 1284 characters across all scripts and function libraries	**Examples:**
		`VAR count = in(1)`
		`VAR restart = in(4);`
		`VAR additional = 25.75`
		
		`FUNC example(count){`
		`  RETURN sqrt(sqrt(count)`
		`+4+count*2)`
		`}`
		
		`IF (count==1 && restart ==0){`
		`  out(1,example(in(2)))`
		`}ELSEIF (restart ==1){`
		`  out(1,0)`
		`}ELSE{`
		`  out(1,additional ) #comment`
		`}`

Output parameters		

Output 1 .. 4	Digital output / memory bit Analog memory bit configured as: • Floating-point number: ±3.402823 e-38 .. ±3.402823 e+38 • Counter: 0 .. 4294967295	The value x of output 1 can be processed in the script by calling the "out(1,x)" function, output 2 by "out(2,x)" and so on.

Error	Digital output / memory bit Analog bit memory configured as counter: 0 .. 4294967295	**Error display:** 0: Script processing completed without errors All values other than 0 provide information about the type and location of the error. In the case of a digital tag type, the error cannot be broken down further. With a counter type, the 32-bits (bit 0 (LSB) to bit31 (HSB)) are subdivided as follows: **Bit0 to bit11: Quality associated value** • Bit-coded - multiple bits can also be set: • Bit0 (value 0x001): CFG, e.g. output(x) called but no x assigned at all on the block • Bit1 (value 0x002): TYPE, e.g. incorrect tag type configured • Bit2 (value 0x004): NSET, e.g. tag not initialized • Bit3 (value 0x008): OOR, e.g. AI overrange • Bit4 (value 0x010): SUBST, i.e. a tag is not available (e.g. from Modbus or an AI with a wire break) • Bit5 (value 0x020): NaN, floating-point operation such as Div0 or root of negative values • Bit6 (value 0x040): INF, floating-point operation with result infinity **Bit12 to Bit15: Script error code** • 1 = Not enough memory • 2 = Syntax error • 3 = Unknown symbol • 4 = Incorrect arguments • 5 = Too many arguments • 6 = Outside the permitted range • 7 = Script execution aborted **Bit16 to Bit19: Block of the error location** • 0 = Error lies within the script of the actual function block • 1 .. 8 = Error is within the script of the included library block 1 to 8 **Bit20 to Bit31: Offset of the error location** • Byte offset of the error from the start of the script specified under Block.

Diagnostics, servicing, maintenance

9

9.1 Diagnostics options

The following diagnostics options are available.

LEDs of the module

For information on the LED displays, refer to the section LEDs (Page 64).

Web Based Management (WBM)

To do this, you need to connect your PC to the RTU either locally, via a router or via the mobile wireless network.

In the WBM area "Diagnostics", you will find the diagnostics messages and the setting options for sending messages if errors occur (see below).

On the following WBM pages you obtain information on the status of the RTU:

- You will find general information on the status of the RTU on the start page of the WBM, refer to the section Status (Page 132).
- You will find information about the system load of the RTU on the WBM page for the system, refer to the section Device info (Page 134).
- You will find the diagnostics messages on the diagnostics page of the WBM, refer to the section Diagnostics buffer (Page 142).

Diagnostics messages

When important events occur, the RTU writes diagnostics messages to its diagnostics buffer. The diagnostics messages are divided into 4 classes, see section Diagnostics buffer (Page 142).

You can read out or transfer diagnostics messages using the following mechanisms:

- Reading out the diagnostics buffer using the WBM
  For details, see section Diagnostics buffer (Page 142).
- Transferring diagnostics messages relating to errors by SMS message or e-mail
  Errors can be sent as a message (SMS or e-mail). You will find the description in the section Configuration (Page 143).

Diagnostics SMS message

Apart from the configurable sending of the diagnostics buffer, the RTU can send standardized diagnostics SMS messages on request. A diagnostics SMS message is sent to a telephone with an unauthorized phone number if it receives an SMS message with the following text from this phone:

```
DIAG?
```

The diagnostics SMS message contains the following data:

- Station name
- Firmware version of the RTU
- Status of the mobile wireless network connection (connected / not connected)
- Mobile wireless standard
- Duration of the last mobile wireless connection
  The data is specified in the following format: "Attached for ddd:hh:mm:ss"
  If the last attempted dial-in to the mobile wireless network was not successful, "Attached for -" is sent.
- IP address of the RTU
- IP addresses of the DNS server
- Signal strength of the mobile wireless network and the RSSI (received field strength at the station)
  Indication of the signal strength:
  - good: Good signal quality (≥ -79 dBm)
  - medium: Medium signal quality (-95 .. -81 dBm)
  - weak: Bad signal quality (≤ -97 dBm)
    Values ≤ -97 dBm do not allow reception.

  Indication of the RSSI (Received Signal Strength Indication): [0 ... 31]; 99 = signal cannot be measured.
- Next communication cycle
  Time at which the next cyclic communication mode starts
- Telecontrol master connection status
  Indication of whether there is a connection to the configured Telecontrol master.
  With ST7
  Indication of whether there is a connection to the configured backup Telecontrol master.
- Telecontrol master last connection
  Time when the last successful connection with the configured Telecontrol master was established.
  With ST7
  Indication of when the last successful connection with the configured Telecontrol backup master was established.

If the data to be sent exceeds the default size of an SMS message, several SMS messages are sent.

Module position (only RTU30x1C)

The RTU can send standardized position SMS in addition to GPS variables.

A position SMS is sent to a telephone with an authorized phone number if the RTU receives an SMS with the following text from this phone: GPSPOSITION?

The position SMS contains the following data as return value: GPS coordinates with height or error message

Example of a response

GPS position: +48.047992 +11.386533 124

Creation of a *.dmp file on SD card

To allow us to better support you in the error analysis of runtime problems, for example, create a *.dmp file and send it to Support. The *.dmp file is encrypted and can only be analyzed by Support.

The *.dmp file contains information including:

- The current configuration of the module
- The current diagnostic buffer
- The current tag values and memory states of the module

For information on creating a *.dmp file on an SD card, see The button "WKUP/RESET" (Page 75).

9.2 Error detections for Telecontrol, e-mails and FTP

Information in diagnostic buffer entries for Telecontrol or MQTT

If the Telecontrol/MQTT connection is terminated, a diagnostic buffer entry is created.

The diagnostics buffer entry can contain the following information:

- 0: The communication partner (e.g. IEC master, DNP3 master, ST7-TIM, Telecontrol server, MQTT broker) has disconnected the Telecontrol connection.
- 1: The RTU has disconnected the Telecontrol/MQTT connection.

Only with MQTT

In case of a faulty reception of a Subscribe topic, the following internal errors can be displayed:

Table 9-1 Subscribe topics

Code	Meaning
1	Errors during JSON analysis: Not enough memory available for analysis.
2	Errors during JSON analysis: Invalid character in the JSON string.
3	Errors during JSON analysis: Payload format is not a complete JSON string.
4	Topic was received but no configurable Subscribe topic can be assigned.
10	General JSON error: Not all necessary placeholders are available.
11	General JSON error: Unexpected type of the root object token.
12	General JSON error: JSON placeholder "DataItems" for data points is missing.
13	General JSON error: JSON placeholder "DataItems" for the list of data points is not an array.
14	General JSON error: JSON placeholder "Variable" for data points is not a JSON object.
15	General JSON error: JSON token "Variable" or "Value" is missing.

Code	Meaning
16	General JSON error: Value of the JSON placeholder "Variable" is not a string.
17	General JSON error: Value of the JSON placeholder "Value" is not a numerical or Boolean value.
18	Variable does not refer to a configured data point.
19	Variable refers to a data point of the type "read only".
20	Value of the variable does not match the expected type.
21	General JSON error: Not all necessary JSON placeholders for a data point are available.
22	General error when writing a value.

Information in diagnostics buffer entries about e-mails and FTP

A diagnostics buffer entry is created if e-mails or files are transferred incorrectly via FTP.

The diagnostics buffer entry can contain the following information:

- Internal error detection; the corresponding error codes are explained on the following page: Link: (https://curl.haxx.se/libcurl/c/libcurl-errors.html)
- Last response of the server
- Number of attempts

Last response of the server

The error codes of the e-mail or FTP server have the following meaning:

Table 9-2 SMTP (e-mail)

Code	Meaning
421	Service not available. Connection is terminated (often lack of resources of the service provider)
450	Action not executed: Mailbox not available / unreachable. Try again later.
451	Action aborted - error in execution
452	Action aborted - not enough system memory
500	Syntax error: Command unknown.
501	Syntax error Check the configuration data.
502	Command not implemented
503	Wrong order of the commands
504	Parameter unknown or not implemented
521	The domain does not accept the e-mail.
530	Access denied For access using STARTTLS encryption is necessary.
535	SMTP authentication incomplete Check "Services" > "E-mail" in the configuration: • "User name" and "Password" • "Connection security"

Code	Meaning
550	Syntax error - recipient e-mail address or domain unknown. Check "Users / groups" > "Groups" in the configuration: • E-mail address of the recipient
551	Mailbox not local Try forwarding
552	Action aborted - error in memory assignment The e-mail could not be transferred because the size of the e-mail exceeds the maximum set by the administrator.
553	Action not executed - mailbox name not allowed (syntax incorrect). See error 535.
554	Transfer failed - no SMTP service available.
5xx	Other error message from the e-mail server The status corresponds to the three-digit error number of the SMTP protocol.

Table 9-3 FTP

Code	Meaning
400 - 499: Non execution of the command (temporary error)	
421	Service not available, control connection will be terminated.
425	Data connection cannot be established.
426	Connection terminated. Transfer aborted.
450	Requested file procedure was not executed. File not available.
451	Requested procedure aborted: Local error during processing.
452	Requested procedure not executed; not enough memory space on the system.
500 - 599: Non execution of the command: Check necessary	
500	Syntax error - command not recognized.
501	Syntax error in the parameters
502	Command not implemented
503	Invalid command sequence
504	Command not implemented for this parameter
530	Not logged on
532	Logon is necessary to save files.
550	Requested file procedure was not executed. File not available.
551	Requested procedure aborted: Unknown page type.
552	Requested file procedure aborted: Not enough space in the current directory or data record.
553	Requested procedure not executed: Illegal file name.

9.3 Loading firmware

New firmware versions

If a new firmware version is available for the module, you will find this on the Internet pages of Siemens Industry Online Support under the following ID:

Link: (https://support.industry.siemens.com/cs/ww/en/ps/21767/dl)

Save the firmware file on the configuration PC.

There are different ways of loading a firmware file on the RTU:

- Loading the firmware via the WBM
- Automatic firmware update of the RTU via provision server
- Loading the firmware from an SD card

Update firmware

Keep the firmware up-to-date. Perform firmware upgrades from the last released version to the new one. This is the only way to ensure that the current configuration is automatically converted to the new version.

You can find more information in the product announcements:

Link: (https://support.industry.siemens.com/cs/products?dtp=ProductNote&mfn=ps&pnid=21767&lc=en-WW)

Loading the firmware via the WBM

You load a new firmware file from the configuration PC on the RTU via the WBM.

You will find a description of establishing the connection to the RTU from the configuration PC in the section Establishing a connection to the WBM of the RTU (Page 123).

You will find a description of loading a firmware file via the WBM of the RTU in the section Firmware (Page 149).

Loading the firmware from an SD card

You will find a description of loading a firmware file from an SD card in the section Commissioning with SD card (Page 108).

9.4 Resetting to factory settings

Resetting to factory settings: Effect

Note

Data on the RTU will be deleted

With the functions for resetting to factory settings described here, all configuration data and process data on the RTU is deleted!

Note

RTU no longer reachable via VPN or HTTPS

When you restore the factory settings, the VPN configuration is deleted and the RTU is no longer reachable via VPN or HTTPS.

- **Deleted data**
  The following data is deleted by resetting to factory settings:
  - IP address of the LAN interface configured by the user
    It is reset to the default factory set IP address 192.168.0.3.
  - All other configuration data in the memory of the RTU
  - All process data in the memory of the RTU
  - Configuration data on a plugged in SD card. The file "default.cfg" on the SD card is deleted.
  - User names and passwords
  - Configured PIN of the SIM card
  - Event buffer
  - Diagnostics buffer
  - Diagnostics buffer on the SD card
  - Retentive counter values
  - Battery usage values
- **Data not deleted**
  The following data is not deleted by resetting to factory settings:
  - MAC address of the LAN interface
  - Process data on the SD card
  - A manually created configuration file "user.cfg" on the SD card

Executing the "Reset to factory settings" function

There are various ways to restore the factory settings:

- **Resetting using the WBM**
  For a description of the procedure, refer to the section Operating status (Page 155).
- **Resetting using the "WKUP/RESET" button**
  For the number of times and duration of pressing the button, refer to the section The button "WKUP/RESET" (Page 75).
- **Reset via the "Operating state"** function block
  You can find a description of the procedure in the section Operating status (Page 360).

For the LED reactions during resetting and restarting, refer to the section LEDs (Page 64).

Reaction after resetting to factory settings

After the reset, the RTU starts up again automatically. The remaining behavior depends on the use of an optional SD card:

- **Startup without SD card**
  - If you do not use an SD card, the RTU remains in service mode without configuration data. The STATUS LED flashes red.
  - The RTU is reachable locally via the following default IP address set in the factory 192.168.0.3 or the DNS name "simatic.rtu".
  - The DHCP server function is enabled.
  - The DHCP client function is disabled.
  - The RTU starts up without configuration data.
    Generally, the defaults apply during the first commissioning, refer to the section Establishing a connection to the WBM of the RTU (Page 123).
- **Startup with SD card**
  If an SD card is plugged in, the RTU first searches the SD card for a firmware file "firmware.sfw" (see section Loading firmware (Page 378)) and then for the configuration file "default.cfg" which was deleted during the reset.
  A configuration file "user.cfg" saved on the SD card by the user is not used.
  The RTU may remain in service mode after a firmware update. The STATUS LED flashes red.
  If you turn off the RTU after the reset, and then start it up with an SD card plugged in with a configuration file "default.cfg", the RTU uses the configuration file "default.cfg". See also section Commissioning and starting up the RTU (Page 102).

9.5 Replacement

9.5.1 Replacing the RTU

Replacing the RTU

⚠ WARNING
Read the safety notices Before changing the RTU, read the safety notices in the section Important notes on using the device (Page 81). While working on the device make sure that the power supply is turned off.

When replacing the RTU follow the steps described in the section Installation, wiring, commissioning, removal (Page 81).

When replacing the RTU, remember to take the SIM card from the old device and insert it in the new one.

Transferring the configuration data to the new RTU

Requirement:

Transferring the configuration data to the new RTU requires that the same or a higher firmware version with the same telecontrol protocol is installed on the new RTU, see section Loading firmware (Page 378).

The procedure for transferring the configuration data to the RTU depends on whether you use an SD card in the RTU:

- **Device replacement without SD card**
  If you do not use an SD card, transfer the configuration data from the configuration PC to the new RTU before replacing the device.
  When you create the configuration data using the WBM of the RTU, you have the option of saving the configuration data on the configuration PC.
- **Device replacement with SD card**
  If you have used an SD card in the old RTU, after turning off the power supply remove the card from the old RTU and insert it in the new RTU before connecting up and installing it.
  When it restarts, the RTU reads the configuration data from the SD card.

9.5.2 Batteries: Replacement, recycling and disposal

The RTU can be operated optionally with one or two battery modules, optionally supplemented in each case by one or two battery expansion modules, see appendix Battery module (Page 403).

Handling batteries

WARNING

Risk of explosion and danger of release of harmful substances!

Do not throw batteries into a fire, do not solder the body of the cell, do not open batteries, do not short-circuit batteries, do not reverse the polarity of batteries, do not heat batteries above 100 °C.

Protect batteries from direct sunlight, dampness and condensation.

Dispose of batteries according to the regulations.

NOTICE

Do not place the battery holders on a conductive surface

Never place the battery holders on an electrically conductive surface (e.g. the outer housing).

The battery contacts can establish a short-circuit connection in the battery via a conductive surface causing the battery to be destroyed.

Replacing batteries

WARNING

Replacement by trained personnel

Batteries must only be replaced by trained service technicians.

To replace batteries you first need to disconnect the battery module from the RTU in the WBM configuration. After replacing the batteries you need to connect the module again in the WBM. For a description of the procedure, refer to the section Power supply (Page 197).

You will find information on the recommended intervals for changing the batteries in the section Batteries: Estimating the working life (Page 204).

For a description of mounting the battery modules, refer to the section Installation (Page 88).

Recycling / disposal

Batteries and rechargeable batteries can be recycled. Their components can be used as raw materials for new batteries/rechargeable batteries or other products. Effective recycling procedures are only possible if batteries of the used batteries of the same type are collected together.

Note

Regulations for disposal of batteries

Keep to the local regulations for the recycling and disposal of batteries.

Technical specifications

10

Technical specifications - SIMATIC RTU3030C/RTU3031C/RTU3041C/RTU3051C		
Article numbers	• RTU3030C: 6NH3112-3BA00-0XX0 • RTU3031C: 6NH3112-3BB00-0XX0 • RTU3041C: 6NH3112-4BB00-0XX0 • RTU3051C: 6NH3112-5BB00-0XX0	
CPU		
Number of program block types	RTU3030C: 45	RTU30x1C: 46
Number of configurable program blocks	Max. 48	
Number of digital memory bits	48	
Number of analog memory bits	24	
Internal memory for user and configuration data	Type: Flash EEPROM	
Internal memory for process data	Type: SRAM	
Optional: External memory for process, diagnostics and configuration data	SD card not included with the product, see accessories.	
Internal clock of the RTU		
Clock type	RTC	
Accuracy	54 s per month (+ deviation due to aging of 8 s per year)	
Can be synchronized using:	• Mobile wireless service NITZ • SNTP • Communication partner of the RTU • GPS (RTU30x1C) • GNSS (RTU3051C)	
Cable lengths		
Permitted cable lengths	All cables for: • Power supply • Inputs • Outputs • LAN (Ethernet connection) • Antenna • Expansion card	Max. 30 m in each case
Power supply, current consumption and power loss		

Technical specifications - SIMATIC RTU3030C/RTU3031C/RTU3041C/RTU3051C		
Power supply from external source via terminal block X10	Power supply	12 .. 24 VDC, max. 1.2 A
	Permitted range	10.8 .. 28.8 V
	Design	Connector with terminal block, 5 terminals, protected against reverse polarity: • 1 input X10 IN (L+, M) • 1 output X10 CTRL (L+, M)
	Possible cable cross-section • Minimum • Maximum	 • 0.2 mm^2 (28 AWG) • 1.5 mm^2 (16 AWG)
	Max- tightening torque of the screw terminals	0.56 .. 0.79 Nm (5 .. 7 in lbs)
Power supply from the battery module *	Battery modules are not supplied with the device. See Accessories, section Battery module (Page 403).	
Current consumption (without connected loads with minimum configuration)	In "sleep mode"	• With battery operation (7.2 V DC): 0,28 mA (typ.) • With ext. supply (24 V DC): 14 mA (typ.)
	In "update mode"	• With battery operation (7.2 V DC): 71 mA (typ.) • With ext. supply (24 V DC): 35 mA (typ.)
	• Additionally with expansion card in Modbus mode and with active fail-safe resistance	• With battery operation (7.2 V DC): 5 mA (typ.) • With ext. supply (24 V DC): 3 mA (typ.)
	• Also with "GPS always active"	RTU3031C and RTU3041C up to HW4: • With battery operation (7.2 V DC): 46 mA (typ.) • With ext. supply (24 V DC): 12 mA (typ.) RTU3051C as of HW5: • With battery operation (7.2 V DC): 12 mA (typ.) • With ext. supply (24 V DC): 18 mA (typ.)
	In "communication mode"	• With battery operation (7.2 V DC): 208 mA (typ.) • With ext. supply (24 V DC): 83 mA (typ.)

Technical specifications - SIMATIC RTU3030C/RTU3031C/RTU3041C/RTU3051C		
Active power loss (without connected loads with minimum configuration)	In "sleep mode"	• With battery operation (7.2 V DC): 2 mW (typ.) • With ext. supply (24 V DC): 340 mW (typ.)
	In "update mode"	• With battery operation (7.2 V DC): 510 mW (typ.) • With ext. supply (24 V DC): 850 mW (typ.)
	• Additionally with expansion card in Modbus mode and with active fail-safe resistance	• With battery operation (7.2 V DC): 36 mW (typ.) • With ext. supply (24 V DC): 72 mW (typ.)
	• Also with "GPS always active"	RTU3031C and RTU3041C up to HW4: • With battery operation (7.2 V DC): 648 mW (typ.) • With ext. supply (24 V DC): 960 mW (typ.) RTU3051C as of HW5: • With battery operation (7.2 V DC): 86 mW (typ.) • With ext. supply (24 V DC): 432 mW (typ.)
	In "communication mode"	• With battery operation (7.2 V DC): 1500 mW (typ.) • With ext. supply (24 V DC): 2000 mW (typ.)
Control output (X10)		
Control and supply of external devices	Regulated, short-circuit proof, can be configured alternatively, for all outputs: • 12 V DC • 24 V DC	
Maximum Power	See below (power)	
Control output (X11)		
Control and supply of sensors / switches for digital inputs / outputs	Regulated, short-circuit proof, can be configured alternatively, for all outputs: • 12 V DC • 24 V DC	
Maximum Power	See below (power)	
Digital inputs (X20, X21, X22, X23)		
Quantity	8	
Type and material	Schmitt trigger input with an internal pull-up resistor. Can be switched via open drain transistors, relays or switches.	
Connection type	2-wire technology	
Level logical = 1 when:	Contact closed (≤ 0.4 V)	
Level logical = 0 when:	Contact open	
Configurable input types	• Binary input – Minimum pulse length for binary input: 2 ms Minimum pulse length in sleep mode or with logging activated: 100 ms – Filter time: 40 µs • Counter input – Input clock frequency: 1 .. 5000 Hz A debounced signal transmitter is necessary.	
Digital outputs (X30, X31)		
Quantity	4	
Type and material	Relay, silver/nickel gold plated	

Technical specifications - SIMATIC RTU3030C/RTU3031C/RTU3041C/RTU3051C		
Connection type	2-wire technology	
Level logical = 1 when:	Contact closed	
Level logical = 0 when:	Contact open	
Maximum switching frequency	1 Hz	
Limit permanent current	300 mA	
Max. switched current	300 mA	
Max. switching voltage	• 60 V DC • 30 V AC effective (42.2 V peak voltage with non-sine-shaped voltage)	
Max. switching capacity	18 W (at 60 VDC)	
Mechanical lifetime of the contacts (typ.)	10^8 switching cycles	
Electrical lifetime of the contacts (typ.)	• At 12 V / 10 mA: • At 6 V / 100 mA: • At 60 V / 300 mA:	• 5 x 10^7 switching cycles • 1 x 10^7 switching cycles • 5 x 10^5 switching cycles
RTU30x1C **Digital outputs (X32, X33)**		
Quantity	4	
Type	Solid-state relay	
Connection type	2-wire technology	
Level logical = 1 when:	Contact closed	
Level logical = 0 when:	Contact open	
Maximum switching frequency	100 Hz	
Limit permanent current	60 mA	
Max. switched current	At +25 °C: 80 mA At +70 °C: 60 mA	
Max. switching voltage	• 60 V DC • 30 V AC effective (42.2 V peak voltage with non-sine-shaped voltage)	
Short-circuit resistance	Contact opens independently from 200 mA (typ.) and only closes again after logical opening/closing 4.8 W (at 60 V DC)	
Internal resistance	23.5 Ω (typ.), 35 Ω (max.)	
Additional current consumption of the RTU per digital output (in closed state)	• With battery operation (7.2 V DC): 8 mA (typ.) • With ext. supply (24 V DC): 3 mA (typ.)	
Additional effective power loss of the RTU per digital output (in closed state)	• With battery operation (7.2 V DC): 58 mW (typ.) • With ext. supply (24 V DC): 72 mW (typ.)	
Analog inputs (X41, X43)		
Quantity	4	
Connection type	2-/3-/4-wire technology (L+, M, X+, X-)	
Configurable input signals (typ, range)	• Current • Voltage • Temperature (Pt1000)	• 0/4 .. 20 mA • 0 .. 5/10 V • -80 ... +140 °C / -112 .. +284 °F

Technical specifications - SIMATIC RTU3030C/RTU3031C/RTU3041C/RTU3051C		
Accuracy	• Current • Voltage • Temperature	• +/- 1 % • +/- 1 % • +/- 1.8 %
Resolution	12 bits (0 .. 4095)	
Input resistance	• 580 kΩ (voltage measurement) • 243 Ω (current measurement)	
Analog inputs - 12/24 V control output for sensors (X40, X42)		
Power supply at terminal L+	Regulated, short-circuit proof, can be configured alternatively, for all outputs: • 12 V DC • 24 V DC	
Maximum Power	See below (power)	
Power		
Maximum power of all outputs (X10 + X11 + X40 + X42 + CTRL expansion card **)	Alternative: • 7.2 W at 24 V • 3.6 W at 12 V With a total of max. 300 mA over all outputs	
Mobile wireless antenna connector / wireless interface (XR1A1 R)		
Frequency bands	UMTS (RTU303xC)	Band 1 (2100 MHz) Band 2 (1900 MHz) Band 4 (1900 MHz) Band 5 (850 MHz) Band 6 (800 MHz) Band 8 (900 MHz) Band 19 (800 MHz)
	GSM	GSM (850/900 MHz) DCS (1800 MHz) PCS (1900 MHz)
	LTE-M (RTU3041C)	B1 (2100 MHz) B2 (1900 MHz) B3 (1800 MHz) B4 (1700 MHz) B5 (850 MHz) B8 (900 MHz) B12 (700 MHz) B13 (700 MHz) B18 (850 MHz) B19 (850 MHz) B20 (800 MHz) B26 (850 MHz) B28 (700 MHz)

Technical specifications - SIMATIC RTU3030C/RTU3031C/RTU3041C/RTU3051C	
LTE-M (RTU3051C)	B1 (2100 MHz)
	B2 (1900 MHz)
	B3 (1800 MHz)
	B4 (1700 MHz)
	B5 (850 MHz)
	B8 (900 MHz)
	B12 (700 MHz)
	B13 (700 MHz)
	B18 (850 MHz)
	B19 (850 MHz)
	B20 (800 MHz)
	B25 (1900 MHz)
	B26 (850 MHz)
	B27 (800MHz SMR)
	B28 (700 MHz)
	B66 (1700 MHz)
	B85 (700 MHz)
NB-IoT (RTU3041C)	B1 (2100 MHz)
	B2 (1900 MHz)
	B3 (1800 MHz)
	B5 (850 MHz)
	B8 (900 MHz)
	B12 (700 MHz)
	B13 (700 MHz)
	B18 (850 MHz)
	B19 (850 MHz)
	B20 (800 MHz)
	B26 (850 MHz)
	B28 (700 MHz)

Technical specifications - SIMATIC RTU3030C/RTU3031C/RTU3041C/RTU3051C		
	NB-IoT2 (RTU3051C)	B1 (2100 MHz) B2 (1900 MHz) B3 (1800 MHz) B4 (1700 MHz) B5 (850 MHz) B8 (900 MHz) B12 (700 MHz) B13 (700 MHz) B18 (850 MHz) B19 (850 MHz) B20 (800 MHz) B25 (1900 MHz) B26 (850 MHz) B28 (700 MHz) B66 (1700 MHz) B71 (600 MHz) B85 (700 MHz)
Antenna connector	Quantity	1
	Design	SMA socket
	Nominal impedance	50 Ω
Maximum wired output power	WCDMA FDD (B1/2/4/5/6/8/19) (RTU303xC)	+24 dBm (Class 3)
	EDGE 1800/1900 MHz	+26 dBm (Class E2)
	EDGE 850/900 MHz	+27 dBm (Class E2)
	DCS 1800, PCS 1900	+30 dBm (Class 1)
	GSM 850/900	+33 dBm (Class 4)
	LTE-M (RTU3041C / RTU3051C)	+23 dBm (Class 3)
	NB-IoT (RTU3041C / RTU3051C)	+23 dBm (Class 3)
GPRS (GSM)	Multislot class	10
	Coding scheme	GMSK
	Transmission speed (maximum)	• Downlink: 85.6 kbps • Uplink: 107 kbps
EDGE (GSM)	Multislot class	10
	Coding scheme	8-PSK
	Transmission speed (maximum)	• Downlink: 236.8 kbps • Uplink: 296 kbps
EDGE (RTU3051C)	Multislot class	10
	Coding scheme	8-PSK
	Transmission speed (maximum)	• Downlink: 264 kbps • Uplink: 210 kbps

Technical specifications - SIMATIC RTU3030C/RTU3031C/RTU3041C/RTU3051C		
HSPA (UMTS) (RTU303xC)	Coding scheme	• Downlink (HSPA+): 64 QAM • Uplink (HSUPA): BPSK
	Transmission speed (maximum)	• Downlink: 21 Mbps • Uplink (HSUPA): 5.76 Mbps
NB-IoT (RTU3041C)	Coding scheme	QPSK
	Transmission speed (maximum)	• Downlink: 21 kbps • Uplink: 62.5 kbps
NB-IoT2 (RTU3051C)	Coding scheme	QPSK
	Transmission speed (maximum)	• Downlink: 120 kbps • Uplink: 160 kbps
LTE-M (RTU3041C)	Coding scheme	QPSK
	Transmission speed (maximum)	• Downlink: 300 kbps • Uplink: 375 kbps
LTE-M (RTU3051C)	Coding scheme	QPSK
	Transmission speed (maximum)	• Downlink: 588 kbps • Uplink: 1 Mbps
SMS	Mode outgoing	MO (mobile originated)
	Service	Point-to-point
RTU30x1C **GPS antenna connector / wireless interface (XR2A1 GNSS)**		
Antenna connector	Quantity	1
	Design	SMA socket
	Nominal impedance	50 Ω
Power supply	• 3.8 V (nominal) • At 5 mA: 3.575 V • At 10 mA: 3.35 V • At 15 mA: 3.125 V	
Current consumption	Max. 15 mA	
Design	32-channel GPS standard	
Frequency bands	RTU30x1C:	
	GPS	• L1 (1575.42 MHz)
	RTU3041C / RTU3051C:	
	GLONASS	• L1 (1602 MHz + k*562.5 kHz, k = -7,..., 5, 6)
	Galileo	• L1 (1575.42 MHz)
	BeiDou	• B1I (1561.098 MHz) • B1C (1575.42 MHz)
	QZSS	• L1 (1575.42 MHz)
Permitted ambient conditions		

Technical specifications - SIMATIC RTU3030C/RTU3031C/RTU3041C/RTU3051C		
Ambient temperature	During operation with the DIN rail installed horizontally	• At an operating height ≤ 2000 m: -40 °C .. +70 °C • At an operating height of 2000...3000 m: -40 °C .. +65 °C
	During operation with the DIN rail installed vertically	• At an operating height ≤ 2000 m: -40 °C .. +60 °C • At an operating height of 2000...3000 m: -40 °C .. +55 °C
	During storage	-40 °C .. +70 °C
	During transportation	-40 °C .. +70 °C
Relative humidity	During operation	≤ 95% at 30 °C, no condensation
	During storage	≤ 95% at 25/55 °C, no condensation
Permitted contaminant concentration	Corrosive gas testing according to IEC 60068-2-42/43 according to the requirements of ISA-S71.04 severity level G1, G2, G3:	
	• SO_2 • H_2S	• < 10 ppm • < 1 ppm
Design	Compact module for DIN rail mounting	
Degree of protection	IP20	
Weight	370 g	
Dimensions (W x H x D) (without terminal blocks of the connectors)	130 x 100 x 75 mm	
Installation options	Standard 35 mm DIN rail	

***** You will find the technical specifications of the battery module and the battery expansion module in the appendix Battery module (Page 403).

****** You will find the technical specifications of the expansion card in the appendix Extension Board (Page 409)

******* You can find the technical specifications of the protective housing in the appendix Protective housing (Page 420).

You will find additional functions and performance data of the RTU in the section Overview of functions (Page 39).

You will find information on the underrange/overrange and underflow/overflow of the analog inputs in the section Analog inputs (Page 212).

10.1 Resistance to harmful gases according to ISA-71.04

The devices listed in the scope of validity meet the following requirements regarding resistance to harmful gases:

Corrosive gases as airborne contaminants Reactive species H_2S and SO_2	ISA-71.04 severity level	G1, G2, G3 RH ≤ 75%, no condensation
	Test according to	IEC 60068-2-42 (SO_2 10ppm)
		IEC 60068-2-43 (H_2S 1ppm)

Approvals

A

Approvals issued

Note

Issued approvals on the type plate of the device

The specified approvals apply only when the corresponding mark is printed on the product. You can check which of the following approvals have been granted for your product by the markings on the type plate.

Documents on the Internet

You will find the declarations of conformity listed below and certificates of the product on the Internet at the following address:
Link: (https://support.industry.siemens.com/cs/ww/en/ps/21767/cert))

You can view the considered standards in the respective certificate which is available on the Internet at the address listed above.

Address for declarations of conformity

The EU and the UK declarations of conformity are available to all responsible authorities at:

Siemens Aktiengesellschaft
Digital Industries
P.O. Box 48 48
90026 Nuremberg
Germany

EC declaration of conformity

The RTU meets the requirements and safety objectives of the following EC directives and it complies with the harmonized European standards (EN) for programmable logic controllers which are published in the official documentation of the European Union.

- **2014/34/EU (ATEX explosion protection directive)**
  Directive of the European Parliament and the Council of 26 February 2014 on the approximation of the laws of the member states concerning equipment and protective systems intended for use in potentially explosive atmospheres, official journal of the EU L96, 29/03/2014, pages. 309-356
- **2014/30/EU (EMV)**
  EMC directive of the European Parliament and of the Council of 26 February 2014 on the approximation of the laws of the member states relating to electromagnetic compatibility; official journal of the EU L96, 29/03/2014, p. 79-106
- **2011/65/EU (RoHS)**
  Directive of the European Parliament and of the Council of 8 June 2011 on the restriction of the use of certain hazardous substances in electrical and electronic equipment

UK Declaration of Conformity

Importer UK:

Siemens plc
Sir William Siemens House
Princess Road
Manchester
M20 2UR

The product meets the requirements of the following directives:

- UKEX Regulations
  SI 2016/1107 The Equipment and Protective Systems Intended for Use in Potentially Explosive Atmospheres Regulations 2016, and related amendments.
- EMC Regulations
  SI 2016/1091 The Electromagnetic Compatibility Regulations 2016, and related amendments.
- RoHS Regulations
  SI 2012/3032 The Restriction of the Use of Certain Hazardous Substances in Electrical and Electronic Equipment Regulations 2012, and related amendments.

ATEX / IECEx / UKEX

Observe the information in the "Use of subassemblies/modules in a Zone 2 Hazardous Area" document, which you will find here:

- On the Internet at the following address:
  Link: (https://support.industry.siemens.com/cs/ww/en/view/78381013)

The conditions must be met for safe usage of the product according to the section Important notes on using the device (Page 81).

The product meets the explosion protection requirements outlined below.

RTU3030C/RTU3031C/RTU3041C/RTU3051C:
II 3G Ex ec nC IIC T4 Gc
- DEKRA 18ATEX0121 X
- DEKRA 21UKEX0004 X
- IECEx DEK 18.0078X

Battery Module / Battery Extension Module:
II 3G Ex ec IIC T4 Gc
- DEKRA 18ATEX0027 X
- DEKRA 21UKEX0003 X
- IECEx DEK 18.0019X

Importer UK:
Siemens plc,
Manchester
M20 2UR

The products meet the requirements of the following standards:

- EN / IEC 60079-7, GB/T 3836.3
- EN / IEC 60079-15, GB/T 3836.8
- EN IEC/IEC 60079-0, GB/T 3836.1

You will find the considered standards in the currently valid certificates.

Radio equipment directive

The RTU meets the requirements of the EC directive 2014/53/EU (Radio equipment) according to the requirements of article 3 (1) a, 3 (1) b and 3 (2).

Art. 3 (1) a - Health and Safety

Harmonized standards:

- EN 60950-1+A1+A2+A11+A12
  Information technology equipment - Safety - Part 1: General requirements
- EN 62311
  Assessment of electronic and electrical equipment related to human exposure restrictions for electromagnetic fields (0 Hz ... 300 GHz)

Art. 3 (1) b - EMC

Harmonized standards:

- ETSI EN 301 489-1 V1.9.2
  Electromagnetic compatibility and radio spectrum matters (ERM) - Electromagnetic compatibility for radio equipment and services - Part 1: Common technical requirements
- ETSI EN 301 489-7 V1.3.1
  Electromagnetic compatibility and radio spectrum matters (ERM) - Electromagnetic compatibility for radio equipment and services - Part 7: Specific conditions for mobile and portable radio and ancillary equipment of digital cellular radio telecommunications systems (GSM and DCS)
- ETSI EN 301 489-24 V1.5.1
  Electromagnetic compatibility and radio spectrum matters (ERM) - Electromagnetic compatibility for radio equipment and services - Part 24: Specific conditions for mobile and transportable IMT-2000 CDMA Direct Spread Spectrum (UTRA) radio and auxiliary equipment
- EN 55032+AC
  Electromagnetic compatibility of multimedia equipment – Emission requirements
- EN 55035
  Electromagnetic compatibility of multimedia equipment - Immunity requirements
- EN 61000-6-1
  Electromagnetic compatibility (EMC) - Part 6-1: Generic standards - Immunity for residential, commercial and light-industrial environments
- EN 61000-6-4+A1
  Electromagnetic compatibility (EMC) - Part 6-4: Generic standards - Emission standard for industrial environments

Only for RTU30x1C:

- EN 61000-6-2+AC
  Electromagnetic compatibility (EMC) - Part 6-2: Generic standards - Immunity for industrial environments
- ETSI EN 303 413 V1.1.1
- Satellite earth stations and systems (SES) - Global Navigation Satellite System - Radios for operation in the frequency bands from 1164 MHz to 1300 MHz and from 1559 MHz to 1610 MHz

Article 3 (2) - Measures of efficient use of the frequency spectrum

Harmonized standards:

- ETSI EN 301 511 V9.0.2
  Global system for mobile communication (GSM). Harmonized standard for mobile phones in the GSM 900 and GSM 1800 bands covering essential requirements of article 3.2 of the R&TTE directive.
- ETSI EN 301 908-1 V6.2.1
  IMT cellular networks - Harmonized standard covering the essential requirements of article 3.2 of the R&TTE directive. Part 1: Introduction and common requirements
- ETSI EN 301 908-2 V6.2.1
  IMT cellular networks. Harmonized standard covering the essential requirements of article 3.2 of the R&TTE directive. Part 2: CDMA Direct Spread (UTRA FDD) User Equipment (UE)

The current versions of the standards can be seen in the EC Declaration of Conformity, see above.

Maximum antenna gain

Users and installers must be provided with antenna installation instructions and transmitter operating conditions that must be followed to avoid exceeding the permitted RF exposure.

Refer to the technical specifications of the antenna, refer to the appendix Antennas and accessories (Page 414).

RoHS

The RTU meets the requirements of the following guidelines:

- EU directive 2011/65/EU on the restriction of the use of certain hazardous substances in electrical and electronic equipment.
- SI 2012/3032 The Restriction of the Use of Certain Hazardous Substances in Electrical and Electronic Equipment Regulations 2012, and related amendments.

Applied standard: EN IEC 63000

c(UL)us

Applied standards:

- Underwriters Laboratories, Inc.: UL 61010-1 (Safety Requirements for Electrical Equipment for Measurement, Control, and Laboratory Use - Part 1: General Requirements)
- IEC/UL 61010-2-201 (Safety requirements for electrical equipment for measurement, control and laboratory use. Particular requirements for control equipment)
- Canadian Standards Association: CSA C22.2 No. 142 (Process Control Equipment)

Report / UL file: E 85972 (NRAG, NRAG7)

cULus Hazardous (Classified) Locations

Underwriters Laboratories, Inc.: cULus IND. CONT. EQ. FOR HAZ. LOC.

Applied standards:

- ANSI ISA 12.12.01
- CSA C22.2 No. 213-M1987

APPROVED for Use in:

- Cl. 1, Div. 2, GP. A, B, C, D T4
- Cl. 1, Zone 2, GP. IIC T4

Ta: Refer to the temperature class on the nameplate

hor.: permissible ambient temperature during operation with horizontal installation of the DIN rail
ver.: permissible ambient temperature during operation with vertical installation of the DIN rail

Report / UL file: E223122 (NRAG, NRAG7)

Note the conditions for the safe deployment of the product according to the section Important notes on using the device (Page 81).

CSA

CSA Certification Mark Canadian Standard Association (CSA) nach Standard C 22.2 No. 142:

- Certification Record 063533–C-000

FM

Factory Mutual Approval Standards:

- Class 3600
- Class 3611
- Class 3810
- ANSI/ISA 61010-1

Report Number 3049847

Class I, Division 2, Group A, B, C, D, T4

Class I, Zone 2, Group IIC, T4

You will find the temperature class on the type plate on the module.

Australia - RCM

The product meets the requirements of the AS/NZS 2064 standards (Class A).

National wireless approvals

To operate the device in certain countries approvals for wireless operation must exist, the agreed marking must be present on the type plate and special instructions for the particular country must be adhered to. Some of the national approvals and instructions are shown below.

Australia / New Zealand

Australian Communications and Media Authority, for compliance levels 1, 2 and 3 in Australia and levels of conformity 1, 2 and 3 in New Zealand. As required by notices under:

- section 182 of the Australian *Radiocommunications Act 1992*;
- section 407 of the Australian *Telecommunications Act 1997*; and
- section 134 of the New Zealand *Radiocommunications Act 1989*.

Canada

CONTAINS IC: 5131A-HE910 (RTU303xC)

CONTAINS IC: 5131A-ME910C1WW (RTU3041C)

IC statement:

This device complies with part 15 of the FCC Rules and Industry Canada license-exempt RSS standard(s). Operation is subject to the following two conditions:
(1) This device may not cause harmful interference, and
(2) this device must accept any interference received,
including interference that may cause undesired operation.

Le présent appareil est conforme aux CNR d'Industrie Canada applicables aux appareils radio exempts de licence. L'exploitation est autorisée aux deux conditions suivantes :
(1) l'appareil ne doit pas produire de brouillage, et
(2) l'utilisateur de l'appareil doit accepter tout brouillage radioélectrique subi,
même si le brouillage est susceptible d'en compromettre le fonctionnement.

Mexico

La operación de este equipo está sujeta a las siguientes dos condiciones:

(1) es posible que este equipo o dispositivo no cause interferencia perjudicial y

(2) este equipo o dispositivo debe aceptar cualquier interferencia, incluyendo la que pueda causar su operación no deseada.

USA

CONTAINS FCC-ID: RI7HE910 (RTU303xC)

CONTAINS FCC-ID: RI7ME910C1WW (RTU3041C)

FCC statement:
"This device complies with part 15 of the FCC Rules. Operation is subject to the following two conditions:
(1) This device may not cause harmful interference, and
(2) this device must accept any interference received, including interference that may cause undesired operation.
Changes or modifications not expressly approved by the party responsible for compliance could void the user's authority to operate the equipment."

Additional statement for Digital Devices / Computer Peripheral Devices
FCC §15.105 statement:
"This equipment has been tested and found to comply with the limits for a Class B digital device, pursuant to part 15 of the FCC Rules. These limits are designed to provide reasonable protection against harmful interference in a residential installation. This equipment generates, uses and can radiate radio frequency energy and, if not installed and used in accordance with the instructions, may cause harmful interference to radio communications. However, there is no guarantee that interference will not occur in a particular installation. If this equipment does cause harmful interference to radio or television reception, which can be determined by turning the equipment off and on, the user is encouraged to try to correct the interference by one or more of the following measures:
- Reorient or relocate the receiving antenna.

- Increase the separation between the equipment and receiver.
- Connect the equipment into an outlet on a circuit different from that to which the receiver is connected.
- Consult the dealer or an experienced radio/TV technician for help."

Country-specific mobile wireless approvals of SIMATIC NET devices

You will find an overview of the mobile wireless approvals of the SIMATIC NET devices for specific countries here:
Link: (www.siemens.com/mobilenetwork-approvals)

You can obtain further information on mobile wireless approvals of SIMATIC NET devices from Siemens Industry Online Support.

Current approvals

SIMATIC NET products are regularly submitted to the relevant authorities and approval centers for approvals relating to specific markets and applications.

If you require a list of the current approvals for individual devices, consult your Siemens contact or check the Internet pages of Siemens Industry Online Support:

Link: (https://support.industry.siemens.com/cs/ww/en/ps/21767/cert)

Dimension drawings

B

Note

All dimensions in the dimension drawings are in millimeters.

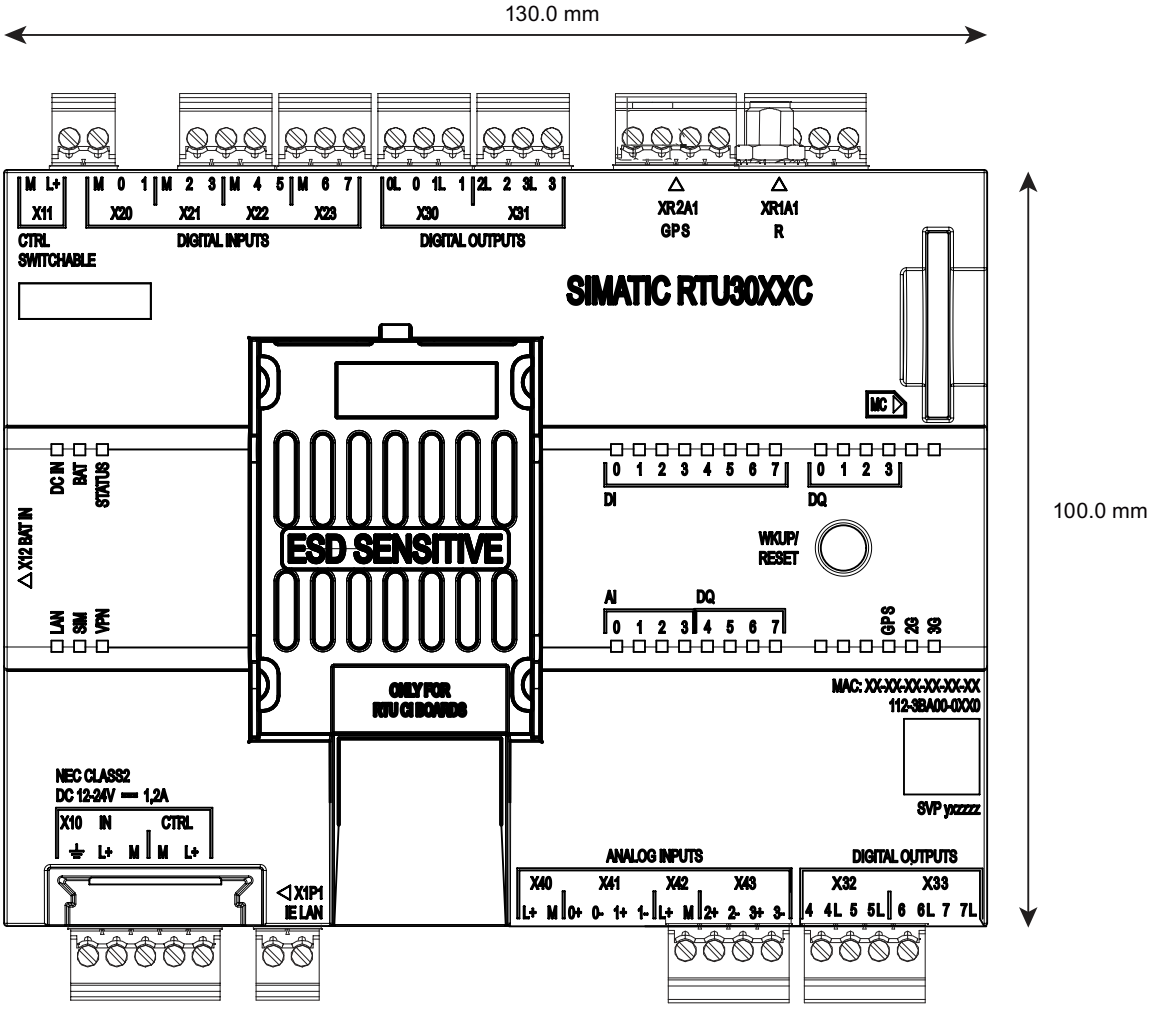

Figure B-1 Front view

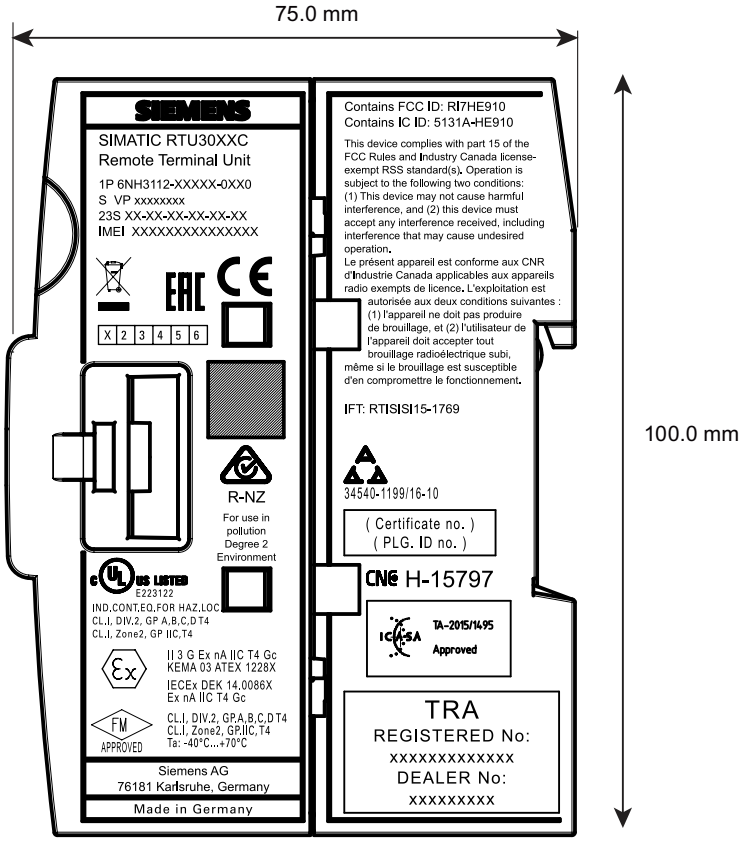

Figure B-2 Side view

Accessories

C

C.1 Battery module

C.1.1 Battery module and battery expansion module

Battery modules and battery expansion modules

For the power supply of the RTU the following optional accessories are available that do not ship with the RTU:

- Battery module
  One or two battery modules can be connected to the RTU. The battery modules can be used as an alternative or in addition to an external power supply.
  Each battery module is equipped with two batteries.
- Battery expansion module
  Each battery module can have one or two expansion modules added to increase the capacity.
  Each expansion module is equipped with two batteries.

The battery module, the battery expansion module and the batteries can be used for all RTU models of the RTU3000 product family.

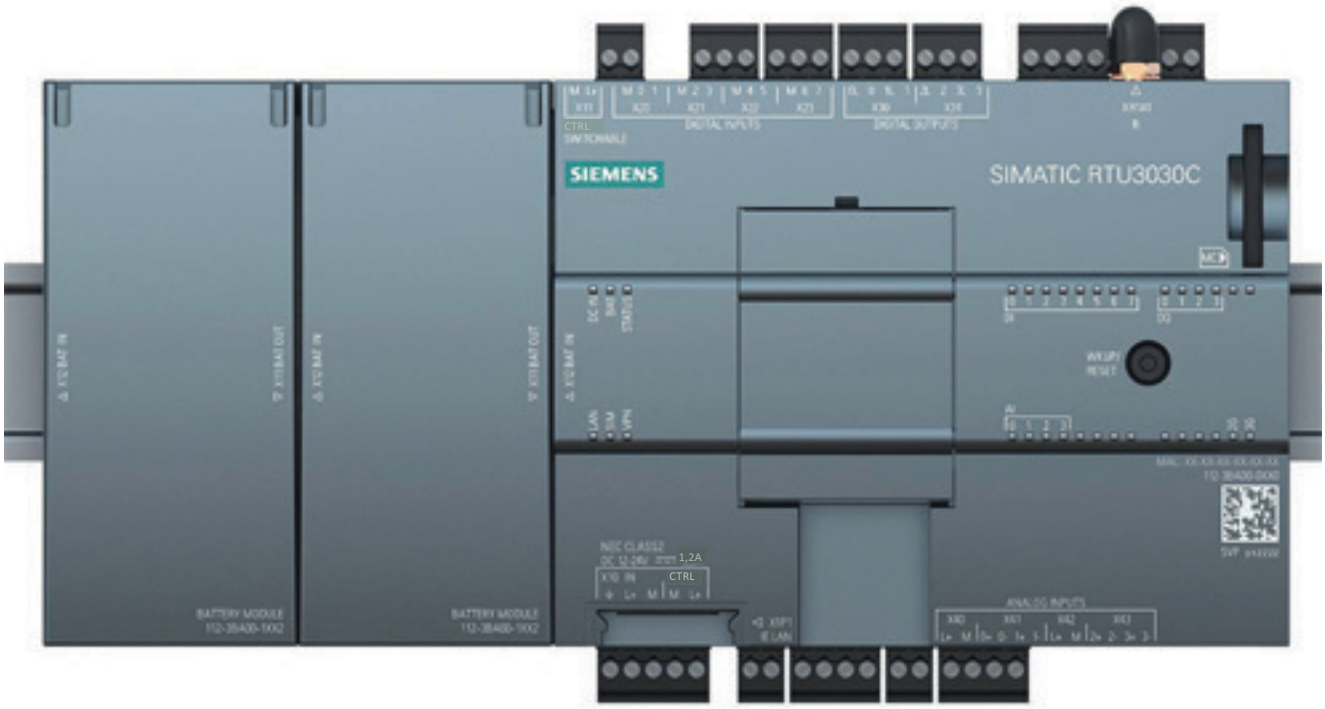

Figure C-1 RTU3030C with two battery modules

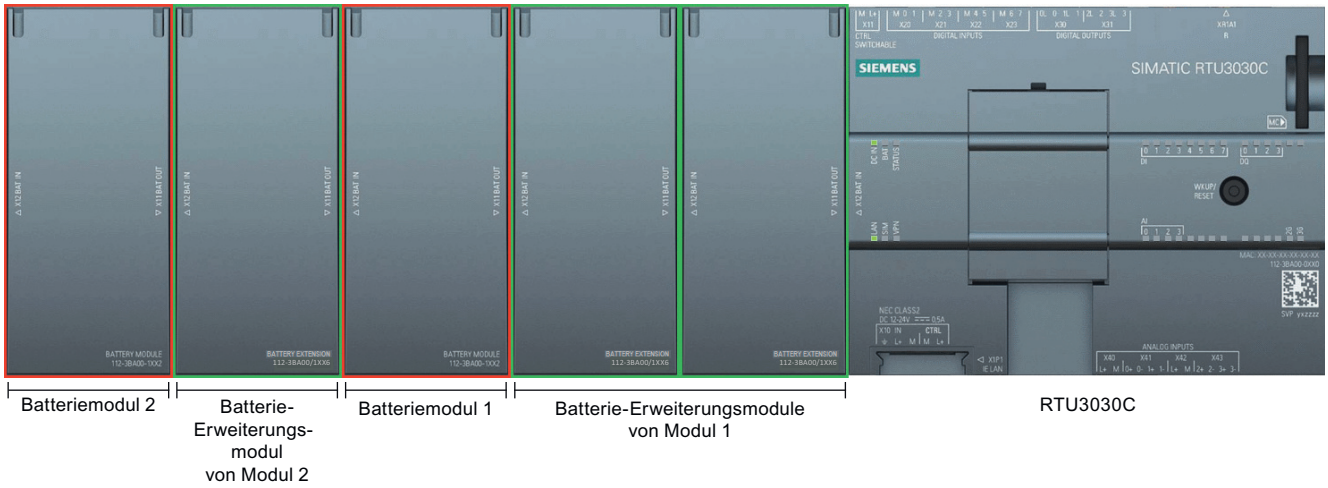

Figure C-2 RTU3030C with two battery modules (framed in red) and a total of three expansion modules (framed in green)

In the second figure battery module 1 has had two expansion modules added. Battery module 2 has only had one expansion module added

A completely equipped battery module with its full fittings is made up of the following components:

- Battery module including battery holder and connector (see below)
- Two battery expansion modules including battery holder and connector (see below)
- Six batteries (2 for the battery module + 2 x 2 for the expansion modules)
  For information on the batteries refer to the appendix Battery (Page 407).

Module changeover

When two battery modules are used, module 1 initially supplies the RTU (in the figures the right-hand module).

When a critical voltage value in module 1 is reached, the RTU switches automatically to battery module 2 (on the left in the figures).

After replacing the batteries of module 1, the RTU can switch back to module 1 after a critical voltage value status is reached in module 2. This guarantees that the batteries of a module are always completely emptied before switching to the other module.

Note

Reduced power output with high current and low temperatures

With a high current in conjunction with very low temperatures the power output at the 12/24 V outputs is reduced because the battery voltage drops considerably at very low temperatures. Under these conditions it is recommended to add at least one battery expansion module to each battery module.

This increases the battery capacity and reduces the disturbance caused by high current peaks particularly at low temperatures.

Ordering data, drawings, technical specifications

Name	Article number	Explanation
Battery module	6NH3112-3BA00-1X X2	**Battery module** Module for power supply to the RTU Including battery holder for two batteries, with connecting cable and connector. Suitable design for direct connection to the RTU or an expansion module (see below) on the DIN rail with a plug-in connection via the supplied connector.
Battery expansion module	6NH3112-3BA00-1X X6	**Expansion module** Battery expansion module to supplement a battery module Including battery holder for two batteries, with connecting cable and connector. Suitable design for direct connection to a battery module on the DIN rail with a plug-in connection via the supplied connector. The battery expansion module can only be used in conjunction with the battery module (see above). It has the same mechanical design as the battery module.

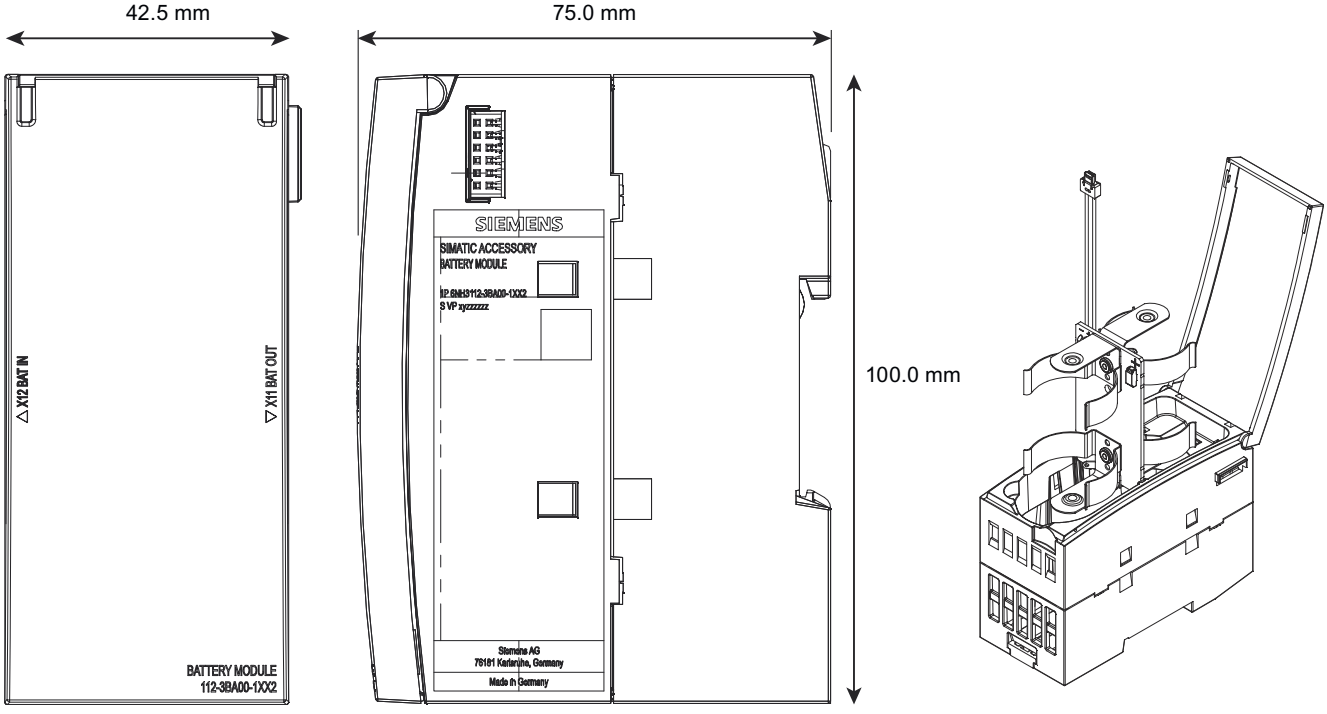

Figure C-3 Battery module: Front view (left), side view (center), housing with battery holder (right)(The expansion module has the same design but different labeling.)

Figure C-4 Battery holder with batteries inserted

Table C-1 Battery module / battery expansion module

Technical specifications - battery module / battery expansion module		
Article numbers		
• Battery module	• 6NH3112-3BA00-1XX2	
• Expansion module	• 6NH3112-3BA00-1XX6	
Permitted ambient conditions		
Ambient temperature	During operation with the DIN rail installed horizontally	-40 °C ... +70 °C
	During operation with the DIN rail installed vertically	-40 °C ... +60 °C
	During storage	-40 °C ... +70 °C
	During transportation	-40 °C ... +70 °C
Relative humidity	During operation	≤ 95% at 30 °C, no condensation
	During storage	≤ 95% at 25/55 °C, no condensation
Permitted contaminant concentration	Corrosive gas testing according to IEC 60068-2-42/43 according to the requirements of ISA-S71.04 severity level G1, G2, G3:	
	• SO2	• < 10 ppm
	• H2S	• < 1 ppm
Design, dimensions and weight		
Design	Compact module for DIN rail mounting	
Material battery module housing	Plastic	
Material battery holder	Spring steel, nickel plated	
Degree of protection	IP20	
Weight without batteries		
• Battery module	• 132 g	
• Expansion module	• 125 g	
Dimensions (W x H x D)	45 x 100 x 75 mm	
Installation options	Standard 35 mm DIN rail The battery module and the expansion module are installed on the same DIN rail as the RTU. *	

* For the installation position see figure above.

C.1.2 Battery

Requirements

For use in the battery module or in the battery expansion module of the RTU, high current resistant lithium metal batteries (primary cells, cannot be recharged) are required.

The batteries must meet the following requirements:

- Electrical data
  - Nominal voltage (V_{nom}): 3.6 V
  - Min permanent current:1800 mA
  - Min. pulsed current:4000 mA
  - **Important:**
    Fuse against short-circuit (overheating protection): Fuse or temperature-dependent resistor
- Geometric data
  - Size acc. to ANSI: D (Mono)
  - Maximum diameter: 33.4 mm
  - Maximum height: 61.5 mm

Allowed battery types

Saft, LSH 20

Technical specifications - LSH 20	
Brand and battery type	
Vendor	Saft
Type	LSH 20
Battery type	D cell, lithium thionyl chloride ($LiSOCl_2$)

Technical specifications - LSH 20		
Electrical data		
Voltage (nominal)	3.6 V	
Capacity (at 15 mA, 2 V, 20 °C)	13 Ah	
Max. current pulse	4000 mA (100 ms)	
Max. continuous current	1800 mA	
Fuse against short-circuit	Fuse 5 A	
Permitted ambient conditions		
Ambient temperature	During operation in the battery module or battery expansion module	With the DIN rail installed horizontally: -40 °C ... +70 °C
		With the DIN rail installed vertically: -40 °C ... +60 °C
	During storage and transportation	Recommended: < +30 °C, dry
Relative humidity	During operation	< 95 %, no condensation
Dimensions and weight		
Weight	100 g	
Dimensions	• Diameter • Height	• 33.1 mm (± 0.3 mm) • 61.0 mm (± 0.6 mm)
Installation options, installation in:	• Battery module • Battery expansion module	• 6NH3112-3BA00-1XX2 • 6NH3112-3BA00-1XX6

EVE, ER 34615M

Technical specifications - ER 34615M	
Brand and battery type	
Vendor	EVE
Type	ER 34615M
Battery type	D cell, lithium thionyl chloride ($LiSOCl_2$)
Electrical data	
Voltage (nominal)	3.6 V
Capacity (at 15 mA, 2 V, 20 °C)	13 Ah
Max. current pulse	4000 mA (100 ms)

Technical specifications - ER 34615M		
Max. continuous current	2000 mA	
Fuse against short-circuit	Fuse 5 A	
Permitted ambient conditions		
Ambient temperature	During operation in the battery module or battery expansion module	With the DIN rail installed horizontally: -40 °C ... +70 °C
		With the DIN rail installed vertically: -40 °C ... +60 °C
	During storage and transportation	Recommended: < +30 °C, dry
Relative humidity	During operation	< 95 %, no condensation
Dimensions and weight		
Weight	110 g	
Dimensions	• Diameter • Height	• max. 33.1 mm • max. 61.5 mm
Installation options, installation in:	• Battery module • Battery expansion module	• 6NH3112-3BA00-1XX2 • 6NH3112-3BA00-1XX6

C.2 Extension Board

C.2.1 EXTENSION BOARD HART / RS485

Expansion card

The following optional expansion card is available for the RTU. It is not included in the scope of delivery of the RTU.

- **EXTENSION BOARD HART / RS485**

Modbus RTU sensors can be connected to the expansion card via RS-485 or HART sensors.

The expansion card can be used for all RTU models of the RTU3000 product family.

The expansion card makes an interface available to which up to 16 devices can be connected as slaves via Modbus RTU or HART. In total, up to 32 tags can be read in and managed. The RTU functions as Modbus master or HART master.

Figure C-5 Expansion card

Ordering data, technical specifications

Table C-2 Extension board

Technical specifications of extension board		
Article number	6NH3112-3BA00-6XX1	
Number of connectable devices	Maximum 16, of which: • Modbus RTU (RS-485) • HART	 • Max. 16 • Max. 16
Number of tags	Max. 32	
Control output (CTRL)		
Control and supply of external devices on the bus	Regulated, short-circuit proof, can be configured alternatively for all outputs of the RTU: • 12 V DC • 24 V DC	
Max. power	See "Technical specifications - RTU (Page 383)", section Power.	
Permitted ambient conditions		

Technical specifications of extension board		
Ambient temperature	During operation with the DIN rail installed horizontally	-40 °C ... +70 °C
	During operation with the DIN rail installed vertically	-40 °C ... +60 °C
	During storage	-40 °C ... +70 °C
	During transportation	-40 °C ... +70 °C
Relative humidity	During operation	≤ 95% at 30 °C, no condensation
	During storage	≤ 95% at 25/55 °C, no condensation
Permitted contaminant concentration	Corrosive gas testing according to IEC 60068-2-42/43 according to the requirements of ISA-S71.04 severity level G1, G2, G3:	
	• SO2	< 10 ppm
	• H2S	< 1 ppm
Design	Extension board as plug-on module for RTU3000C	
Housing material	Plastic	
Degree of protection	IP20	
Weight	22 g	
Dimensions (W x H x D)	38 x 62 x 21 mm	

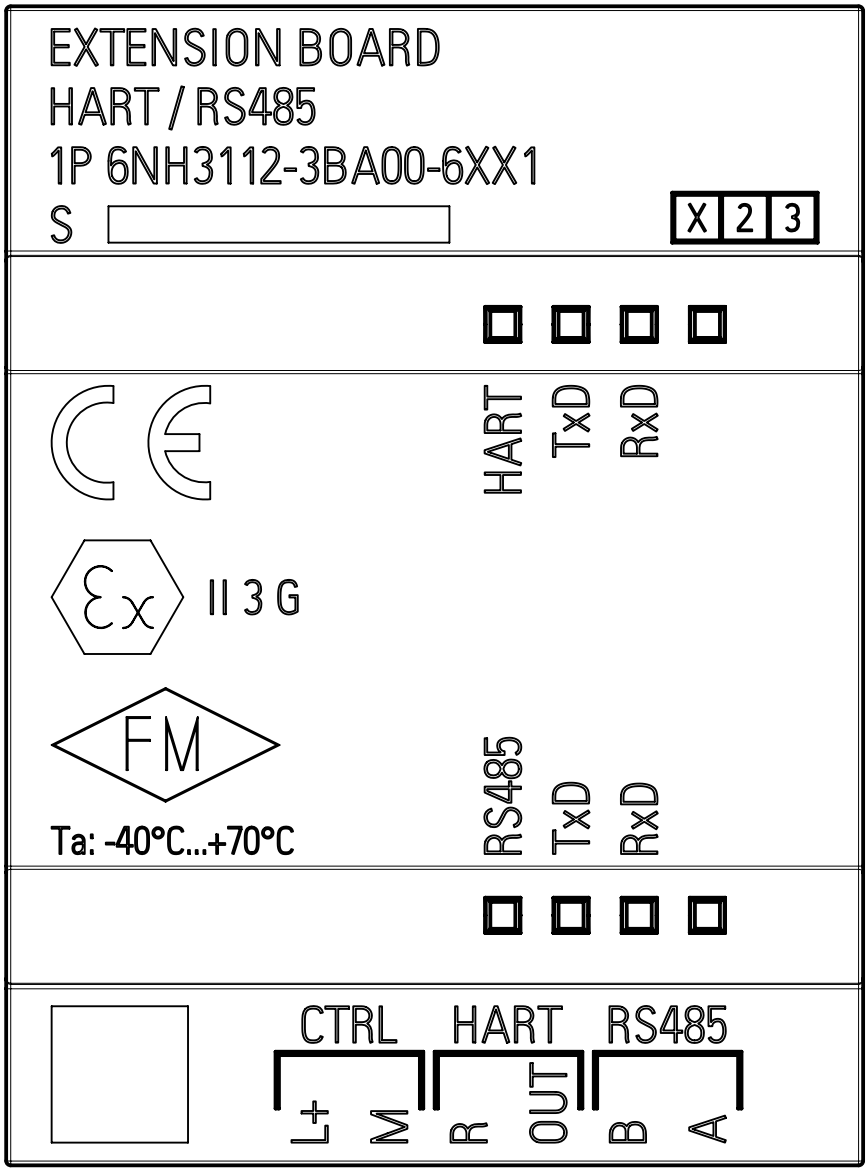

Extension board: Front view

C.3 SD card / SMC

C.3.1 Compatible SD cards

Compatible SD cards

For the "Logging" mode you require an SD card.

The card slot and the RTU are compatible with the following card formats:

- **Standard SD card**
  Format 32 x 24 mm
  Specifications:
  - SD 1.0, 1 GB, FAT32
  - SD 1.1, 2 GB, FAT32
  - SDHC, to 32 GB, FAT32
- **SIMATIC S7 Memory Card (SMC)**
  For information on the available SMC types, refer to the section SIMATIC S7 Memory Card (SMC) (Page 413).

You will find more information on using SD cards in the section Scope of delivery, accessories, requirements (Page 51).

Note

Memory size of the SD card with enabled logging function

With enabled logging function, use an SD card with min. 4 GB.

Temperature range of the SD card

When using an SD card, make sure that this is suitable for the temperature range in which the RTU is used.

Quality of the SD card

Make sure that you use quality cards because due to regular switching on and off, the interface of the SD card is subject to greater demands than with other applications.

C.3.2 SIMATIC S7 Memory Card (SMC)

SIMATIC S7 - Memory Card (SMC)

The SMC is available with various capacities. The recommended memory capacity is in the range between 24 MB and 32 GB. SMCs up to 32 GB memory capacity are supported.

Article numbers: 6ES7954-8Lx02-0AA0
x is a placeholder for: F / L / P / T

You will find the cards on the pages of the Siemens Industry Mall using the search term "6ES7954".

C.4 Antennas and accessories

C.4.1 Antenna ANT896-4ME

The following antenna is available for use in mobile wireless networks and can be installed both indoors and outdoors.

The antenna and the antenna cable must be ordered separately; see Antenna accessories, screw connections (Page 417).

Antenna ANT896-4ME

Figure C-6 Antenna ANT896-4ME

Article number	6GK5896-4ME00-0AA0
Mobile wireless	GSM (2G), UMTS (3G) and LTE (4G)
Frequency range	698 ... 2700 MHz
Antenna gain	3 dBi
Temperature	-40 °C ... 70 °C
IP degree of protec-tion	IP66
Connector	N connector female

You will find detailed information in the documentation of the device. You will find this on the Internet on the pages of Siemens Industry Online Support at the following address:

Link: (https://support.industry.siemens.com/cs/ww/en/view/100699507)

C.4.2 Antenne ANT897-4MA

The following antenna is available for use in mobile wireless networks and can be installed both indoors and outdoors.

The antenna and the antenna cable must be ordered separately; see Antenna accessories, screw connections (Page 417).

Antenna ANT897-4MA

Article number	6GK5897-4MA00-0AA3
Mobile wireless	LTE (4G) and 5G
Frequency range	617 ... 960 MHz 1452 to 1575 MHz 1710 to 2690 MHz 3300 to 4200 MHz 4400 to 5000 MHz
Antenna gain	1 dBi (617 to 960 MHz) 2 dBi (1452 to 5000 MHz)
Temperature	-20 °C ... +65 °C
IP degree of protec-tion	IP65
Connector	SMA connector female

You will find detailed information in the documentation of the device. You will find this on the Internet on the pages of Siemens Industry Online Support at the following address:

Link: (https://support.industry.siemens.com/cs/ww/en/pv/6GK5897-4MA00-0AA3/pi?dl=en)

C.4.3 Antenna ANT897-4ME

The following antenna is available for use in mobile wireless networks and can be installed both indoors and outdoors.

The antenna and the antenna cable must be ordered separately; see Antenna accessories, screw connections (Page 417).

Antenna ANT897-4ME

Article number	6GK5897-4ME00-0AA0
Mobile wireless	GSM (2G), UMTS (3G), LTE (4G) and 5G
Frequency range	617 ... 960 MHz 1427 to 6000 MHz
Antenna gain	1 dBi (617 to 698 MHz) 2 dBi (698 to 960 MHz) 2 dBi (1427 to 2700 MHz) 6 dBi (3400 to 6000 MHz)
Temperature	-40 °C ... +80 °C
IP degree of protec-tion	IP65
Connector	N connector female

You will find detailed information in the documentation of the device. You will find this on the Internet on the pages of Siemens Industry Online Support at the following address:

Link: (https://support.industry.siemens.com/cs/ww/de/pv/6GK5897-4ME00-0AA0/pi?dl=de)

C.4.4 Antenna ANT794-4MR

The following antenna is available for use in mobile wireless networks and can be installed both indoors and outdoors.

The antenna must be ordered separately.

Antenna ANT794-4MR

Figure C-7 Antenna ANT794-4MR

Article number	6NH9860-1AA00
Mobile wireless	GSM (2G), UMTS (3G), LTE (4G)
Frequency range	790 ... 862 MHz 890 ... 960 MHz 1710 ... 2170 MHz 2500 ... 2690 MHz
Antenna gain	2 dBi
Temperature	-40 °C ... 70 °C
IP degree of protection	IP65
Connector	SMA connector male

You will find detailed information in the documentation of the device. You will find this on the Internet on the pages of Siemens Industry Online Support at the following address:

Link: (https://support.industry.siemens.com/cs/ww/en/view/23119005)

C.4.5 Antenna ANT895-6ML (RTU30x1C)

The following antenna is available for receiving GNSS location and time information and can be installed both indoors and outdoors.

The antenna must be ordered separately.

Antenna ANT895-6ML

Figure C-8 GNSS antenna, ANT895-6ML, flat antenna

Article number	6GK5895-6ML00-0AA0
Usage	Global navigation satellite systems
Frequency range	1575.42 MHz ± 10 MHz
Antenna gain	3 dBic (at 90°) -2 dBic (at 20°)
Temperature	-40 °C ... +85 °C
IP degree of protec-tion	IP67
Connector	N connector female

Flexible connecting cable for antenna

In addition, you can use one of the flexible connection lines listed in the section Antenna accessories, screw connections (Page 417) to connect the antenna to the RTU.

C.4.6 Antenna accessories, screw connections

Use of the antennas and accessories

The RTU has an SMA socket as the antenna connector.

Depending on the use of the RTU without or with protective housing, different components must be used.

- **RTU without protective housing**
  Use the following components:
  - Antenna ANT794-4MR with SMA plug
- **RTU with protective housing, antenna detached from the housing**
  Use the following components:
  - Antenna ANT896-4ME (N-Connect female)
  - Flexible connecting cable (N-Connect male / SMA male)
    Connection between the SMA socket of the RTU and the protective housing
  - For mounting in the 13.7 x 16.2 mm hole of the protective housing, alternatively:
    - Cabinet feedthrough (N-Connect female / N-Connect female)
      or
    - Overvoltage protection module LP798-1N (N-Connect female / N-Connect female)
  - Flexible connecting cable (N-Connect male / N-Connect male)
    Connection between the cabinet feedthrough or overvoltage protection module and antenna

Antenna accessories

- **Cabinet feedthrough**
  To feed the antenna cable through the wall of the protective housing from the outside, you require the following cabinet feedthrough:
  Cabinet feedthrough for wall thickness max. 4.5 mm, IP68
  N-Connect female/ N-Connect female
  Manufacturer: Siemens AG
  Article number 6GK5 798-2PP00-2AA6
  Link: (https://support.industry.siemens.com/cs/ww/en/pv/6GK5798-2PP00-2AA6/td)
- **Flexible connecting cable for antenna**
  Flexible connecting cable, preassembled. Length 0.3 m to connect the RTU to the overvoltage protection module or the cabinet feedthrough
  N-Connect male / SMA male
  Manufacturer: Siemens AG
  Article number 6XV 1875-5LE30
  Link: (https://support.industry.siemens.com/cs/ww/en/pv/6XV1875-5LE30/td)
  Other possible lengths:
  - Length 1 m: 6XV 1875-5LH10
    Link: (https://support.industry.siemens.com/cs/ww/en/pv/6XV1875-5LH10/td)
  - Length 2 m: 6XV 1875-5LH20
    Link: (https://support.industry.siemens.com/cs/ww/en/pv/6XV1875-5LH20/td)
  - Length 5 m: 6XV 1875-5LH50
    Link: (https://support.industry.siemens.com/cs/ww/en/pv/6XV1875-5LH50/td)

- **Overvoltage protection module**
  See section Overvoltage protection module for the antenna cable (Page 424).
- **HF coupling piece**
  Optional for connecting two components with N-Connect female connector
  N-Connect male / N-Connect male
  Manufacturer: Siemens AG
  Article number 6GK5 798-0CP00-1AA0
  Link: (https://support.industry.siemens.com/cs/ww/en/pv/6GK5798-0CP00-1AA0/td)

C.5 IP-based routers

Routers for IP-based communication

To connect a communications module to IP-based infrastructure networks, various routers are available from Siemens.

Information on the devices can be found on the following Siemens Internet pages.

Siemens Industry Online Support:
Link: (https://support.industry.siemens.com/cs/ww/en/ps/15982)

Siemens Industry Mall at:
Link: (https://mall.industry.siemens.com/mall/en/WW/Catalog/Products/10215915?tree=CatalogTree)

C.6 Protective housing

C.6.1 Aluminum protective housing

Aluminum protective housing

Name	Article number	Explanation
Aluminum protective housing	6NH3112-3BA00-1X X3	Properties • Material: Aluminum (AlSi 12), powder-coated, gray (RAL 7001) • Degree of protection IP68 • Resistant to saltwater • Lid with hinges and 4 front screws (stainless steel, PIN Torx M6x30) lid seal chloroprene • With mounted 35 mm DIN rail, suitable for the RTU • 7 holes for cable gland M 16 • 2 ventilation nozzles M12 with NBR flat seal (top/bottom) with DAE membrane, watertight, dust proof, permeable for steam • Resistance to impact 10 J (ATEX 7J) Supplied accessories: • 2 DIN rail brackets • Documentation Grounding via lightning protector or cable gland

Table C-3 Accessories to be ordered separately

Accessories	Article number
Cable gland M 16 (10-14 mm), brass nickel plated, IP68 Packaging unit: 2	6NH3112-3BA00-1XX4
Sealing plug M 16, brass, IP68 Packaging unit: 2	6NH3112-3BA00-1XX5

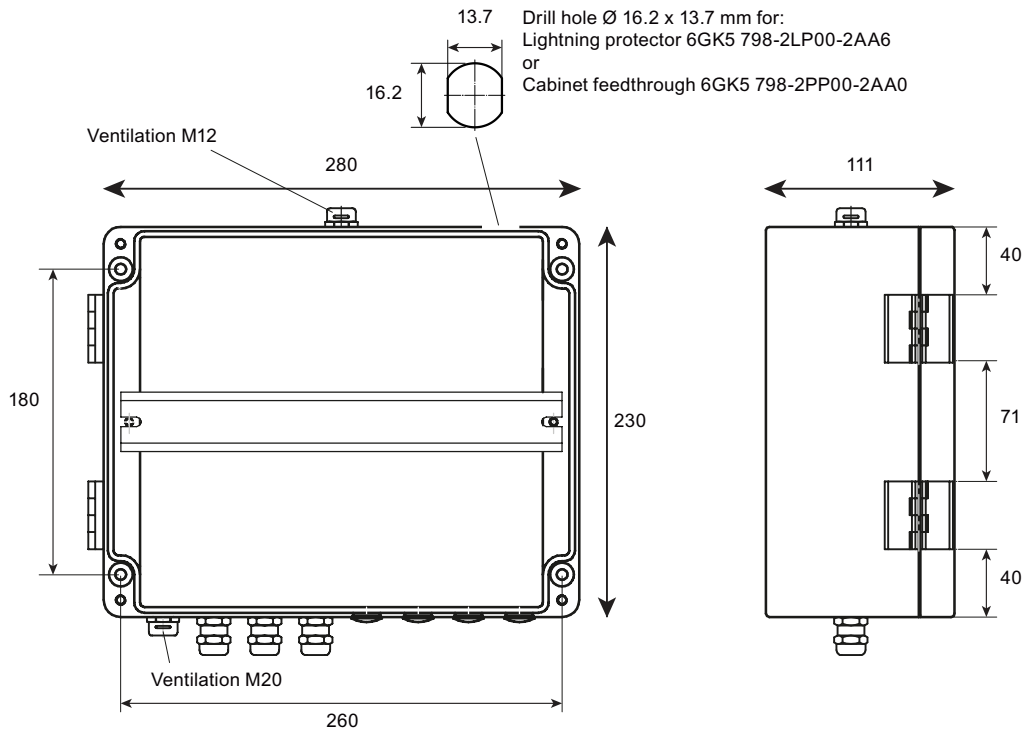

Figure C-9 Aluminum protective housing: Front view (left), side view (right)Here with several mounted cable glands and sealing plugs (do not ship with the product)

Table C-4 Aluminum protective housing

Technical specifications		
Article number	6NH3112-3BA00-1XX3	
Permitted ambient conditions		
Ambient temperature	During operation	-40 °C ... +80 °C
	During storage	-40 °C ... +80 °C
	During transportation	-40 °C ... +80 °C
Relative humidity	During operation	≤ 95% at 30 °C, no condensation
	During storage	≤ 95% at 25/55 °C, no condensation
Design, dimensions and weight		
Material	Aluminum	
Degree of protection	IP68 *	
Weight	3395 g	
Dimensions (W x H x D)	280 x 230 x 111 mm	
Installation options	Standard 35 mm DIN rail	

***** Please note the following:

Note

Mounting note for IP68 protection

The degree of protection IP68 is only ensured when the lid screws are tightened with the designated torque and all drill holes in the housing are closed with the intended accessories (cable gland or sealing plug and cabinet feedthrough or lightning protection element).

Keep to the following torques:

- Lid screws: 2.5 Nm
- Cable gland M16 adapter: 3.5 .. 4.5 Nm
- Sealing plugs M16: Fit hand-tight with a tool: 2.5 .. 3.5 Nm
- Pressure equalization element M12 (premounted): 1.5 Nm
- Cabinet feedthrough/lightning protection element: 1.5 Nm

C.6.2 Stainless steel protective housing

Stainless steel protective housing

Name	Article number	Explanation
Stainless steel protective housing	6NH3112-3BA00-1XX1	Properties • Material: Stainless steel 1.4301 • Degree of protection IP68 • Lid with four screws (stainless steel, PIN torx M6x15) • Lid seal silicon • With mounted 35 mm DIN rail, suitable for the RTU • 7 holes for cable gland M 16 • 2 ventilation nozzles M12 with NBR flat seal (top/bottom) with DAE membrane, watertight, dust proof, permeable for steam • Resistance to impact 10 J (ATEX 7J) • Premounted: Grounding bolts M10, brass Supplied accessories: • 2 DIN rail brackets • Documentation Grounding via grounding bolts or cable gland

Table C-5 Accessories to be ordered separately

Accessories	Article number
Cable gland M 16 (10-14 mm), brass nickel plated, IP68 Packaging unit: 2	6NH3112-3BA00-1XX4
Sealing plug M 16, brass, IP68 Packaging unit: 2	6NH3112-3BA00-1XX5

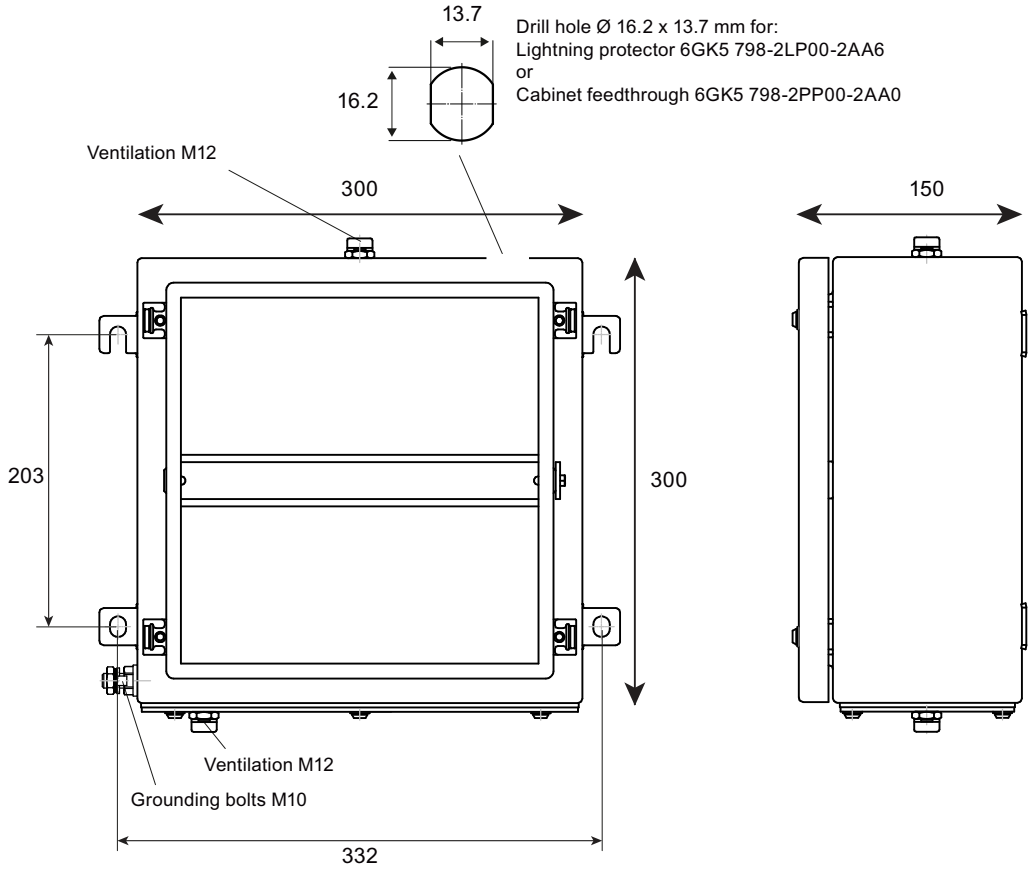

Figure C-10 Stainless steel protective housing: Front view (left), side view (right)

Table C-6 Stainless steel protective housing

Technical specifications		
Article number	6NH3112-3BA00-1XX1	
Permitted ambient conditions		
Ambient temperature	During operation	-60 °C ... +135 °C
	During storage	-60 °C ... +135 °C
	During transportation	-60 °C ... +135 °C
Relative humidity	During operation	≤ 95% at 30 °C, no condensation
	During storage	≤ 95% at 25/55 °C, no condensation
Design, dimensions and weight		

Technical specifications	
Material	Stainless steel
Degree of protection	IP68 *
Weight	5960 g
Dimensions (W x H x D)	300 x 300 x 150 mm
Installation options	Standard 35 mm DIN rail

* Please note the following:

Note

Mounting note for IP68 protection

The degree of protection IP68 is only ensured when the lid screws and the screws of the premounted flange plate are tightened with the designated torque and all drill holes in the housing are closed with the intended accessories (cable gland or sealing plug and cabinet feedthrough or lightning protection element).

Keep to the following torques:

- Lid screws and screws of the premounted flange plate: 2.5 Nm
- Cover nut of the cable gland M16: 3.5 .. 4.5 Nm
- Cover nuts of sealing plugs M16: Fit hand-tight with a tool: 2.5 .. 3.5 Nm
- Pressure equalization element M12 (premounted): 1.5 Nm
- Cabinet feedthrough/lightning protection element 1.5 Nm

C.7 Overvoltage protection modules

C.7.1 Overvoltage protection module for the antenna cable

Overvoltage protection module for the antenna

The following or a technically equivalent module are suitable to protect the system from looping in overvoltages via an antenna cable. Degree of protection IP68

Lightning Protector LP798-1N

Article number 6GK5798-2LP00-2AA6

Manufacturer: Siemens AG

Link: (https://support.industry.siemens.com/cs/ww/en/pv/6GK5798-2LP00-2AA6/td)

C.7.2 Overvoltage protection modules for supply and signal cables

Overvoltage protection modules for supply and signal cables

The following or technically equivalent modules are suitable to protect the system from looping in overvoltages via supply or signal cables:

Manufacturer: DEHN + SÖHNE GmbH + Co. KG

https://dehn.de

- For power supply cables
  Blitzductor BVT AVD 24,
  Article number 918 422

Syslog Messages

D

D.1 Structure of the Syslog Messages

The Syslog server collects log information of the devices and informs you about specific events. The Syslog messages are transmitted via the set UDP port (standard 514) according to RFC 5424.

Syslog messages log information when the device is accessed. Information can be status information such as the origin of the message or a time stamp. The Syslog protocol prescribes a fixed sequence and structure of the possible parameters.

The Syslog message consists of the following parameters:

Parameter	Explanation
HEADER	
PRI	PRI contains the coded priority of the Syslog message, broken down into Severity (severity of the message) and Facility (origin of the message).
VERSION	Version number of the Syslog specification.
TIMESTAMP	The device sends the time stamp in the format "2010-01-01T02:03:15.0003+02:00" as the local time including the time zone and correction for daylight saving / standard time if needed.
HOSTNAME	The station name configured in the "System" tab for the RTU.
APP-NAME	Device or application from which the message originates. "-" is output if information is missing.
PROCID	The process ID serves to clearly identify the individual processes, for example during analysis and troubleshooting. "-" is output if information is missing.
MSGID	ID to identify the message. "-" is output if information is missing.
STRUCTURED-DATA	
timeQuality	The structured data element "timeQuality" provides information on system time. Example: [timeQuality tzKnown="0" isSynced="0"] The "tzKnown" parameter indicates whether the sender knows its time zone (value "1" = known; value "0" = unknown). The "isSynced" parameter indicates whether the sender is synchronized with a reliable external time source, e.g. via NTP (value "1" = synchronized; value "0" = not synchronized).
MSG	
MESSAGE	Message as ASCII string (English)

Note

Additional information

You can read more detailed information on the structure of the Syslog messages and on the meaning of the parameters in RFC 5424.

https://tools.ietf.org/html/rfc5424

D.2 Tags in Syslog Messages

The tags are displayed in the section "Syslog messages" in the field "Message text" within curly brackets {variable}.

The output messages can contain the following tags:

Tag	Description	Format	Possible values or example
{Ip address}	Source or destination IP address IPv4 address according to RFC1035	%d.%d.%d.%d	192.168.1.105
{FQHN}	Fully Qualified Host Name: Completely specified computer name; specified either as a domain (Fully Qualified Domain Name, FQDN) or as an IP address.	FQDN: host1.com IPv4: %d.%d.%d.%d	server1 192.168.1.105
{Protocol}	Layer 4 protocol or service used that generated the event.	%s	UDP | TCP | WBM | VPN | VPN 1 | VPN 2
{User name}	Character string (without spaces) that identifies the authenticated user by his or her name.	%s	admin1
{Destination user name}	Identifies the user based on his/her name.	%s	user2
{Role}	Symbolic name for the group role.	%s	Administrator | Benutzer
{Time second}	Number of seconds	%d	60
{Failed login count}	Number of failed login attempts	%d	1 - 3 (after the third time, access is blocked for 5 s)
{Max sessions}	Maximum number of the sessions	%d	2
{Version}	Name of the version (without spaces).	%s	V3.0.27
{Reason}	Additional status information as number.	%d	2

Tag	Description	Format	Possible values or example
{Trigger condition}	Character string (without spaces) for a trigger condition that activates the relevant function.	%s	BasicCycle WakeupCall ServiceSMS TelecontrolSMS SendSMS E-mail FTP Telecontrol WBM Syslog

Tag	Description	Format	Possible values or example
{Config detail}	Character string (without space) for one part of the configuration.	%s	System-Description GPS (RTU30x1C) System-Time System-SDCard System-Tags Diagnostic LAN WAN WAN-SMS Services-Email Maintenance-FW-Update WAN-DynDNSClient Security-HTTPS Users Recipient-Groups Tags-Texts Tags-DIs Tags-DQs Tags-DMs Tags-AIs Tags-AMs Tags-IntTemp Tags-ExtPwr Tags-Batteries Preprocessing-FBs Security-OpenVPN Security-SinemaRC OperationModes-Logging OperationModes Telecontrol Preprocessing-NWs PowerSupply Services-FTPClient VariableTables ExtensionBoard Security-Syslog

D.3 Explanation of the messages

This section describes the Syslog messages. The structure of the messages is based on IEC 62443-3-3.

Human user identification and authentication

Message text	{Protocol}: User {User name} logged in from {IP address}.
Example	WBM: User admin logged in from 192.168.0.1.
Explanation	Valid login information that is specified during login.
Severity	Info
Facility	local0
Standard	IEC 62443-3-3 Reference: SR 1.1

Message text	{Protocol}: User {User name} failed to log in from {IP address}.
Example	WBM: User admin failed to log in from 192.168.0.1.
Explanation	Incorrect user name or password specified during login.
Severity	Error
Facility	local0
Standard	IEC 62443-3-3 Reference: SR 1.1

Message text	{Protocol}: User {User name} logged out from {IP address}.
Example	WBM: User admin logged out from 192.168.0.1.
Explanation	User session completed - logged out.
Severity	Info
Facility	local0
Standard	IEC 62443-3-3 Reference: SR 1.1

Message text	{Protocol}: Default user {User name} logged in from {IP address}.
Example	WBM: Default user admin logged in from 192.168.0.1.
Explanation	The standard user has logged in to the WBM with "admin"/"admin".
Severity	Info
Facility	local0
Standard	IEC 62443-3-3 Reference: n/a (NERC-CIP 007-R5)

Account management

Message text	{Protocol}: User {User name} has changed the password.
Example	WBM: User admin has changed the password.
Explanation	User has changed own password.
Severity	Notice
Facility	local0
Standard	IEC 62443-3-3 Reference: SR 1.3

Message text	{Protocol}: User {User name} has changed the password of user {Destination user name}.
Example	WBM: User admin has changed the password of user user1.
Explanation	User has changed the password of another user.
Severity	Notice
Facility	local0
Standard	IEC 62443-3-3 Reference: SR 1.3

Message text	{Protocol}: Default admin account was changed to {User name}.
Example	WBM: Default admin account was changed to newadmin.
Explanation	The factory default user name "admin" has been changed.
Severity	Notice
Facility	local0
Standard	IEC 62443-3-3 Reference: SR 1.3

Message text	{Protocol}: User {User name} created user-account {Destination user name} with role {Role}.
Example	WBM: User admin created user-account admin2 with role Administrator.
Explanation	The administrator has created an account and assigned a role to it.
Severity	Notice
Facility	local0
Standard	IEC 62443-3-3 Reference: SR 1.3

Message text	{Protocol}: User {User name} changed user-account {Destination user name} with role {Role}.
Example	WBM: User admin changed user-account admin2 with role Administrator.
Explanation	The administrator has changed an existing account.
Severity	Notice
Facility	local0
Standard	IEC 62443-3-3 Reference: SR 1.3

Message text	{Protocol}: User {User name} deleted user-account {Destination user name}.
Example	WBM: User admin deleted user-account admin2.
Explanation	The administrator deleted an existing account.
Severity	Notice
Facility	local0
Standard	IEC 62443-3-3 Reference: SR 1.3

Unsuccessful login attempts

Message text	{Protocol}: {IP address} is locked for {Time second} seconds after {Failed login count} unsuccessful login attempts.
Example	WBM: 192.168.1.105 is locked for 5 seconds after 3 unsuccessful login attempts.
Explanation	If there were too many failed logins, the corresponding IP address was locked for a specific period of time.
Severity	Warning
Facility	local0
Standard	IEC 62443-3-3 Reference: SR 1.11

Session lock

Message text	{Protocol}: The session of user {User name} was closed after {Time second} seconds of inactivity.
Example	WBM: The session of user admin was closed after 60 seconds of inactivity.
Explanation	The current session was ended due to inactivity.
Severity	Warning

Facility	local0
Standard	IEC 62443-3-3 Reference: SR 2.5

Remote session termination

Message text	{Protocol}: Remote session {Config detail} was closed after {Time second} seconds of inactivity.
Example	VPN 1: Remote session OpenVPN was closed after 120 seconds of inactivity.
Explanation	The VPN connection was terminated after a period of inactivity.
Severity	Notice
Facility	local0
Standard	IEC 62443-3-3 Reference: SR 2.6

Access via untrusted networks

Message text	{Protocol}: Remote access enabled via {Trigger condition}.
Example	WBM: Remote access enabled via WakeupCall.
Explanation	Communication mode is enabled and remote access is allowed. You can find a list of possible "Trigger conditions" in the section Tags in Syslog Messages (Page 428).
Severity	Info
Facility	local0
Standard	IEC 62443-3-3 Reference: SR 1.13

Message text	{Protocol}: User {User name} logged in to {FQHN}.
Example	WBM: User admin logged in to 192.168.1.105.
Explanation	The user has successfully logged in to the remote device.
Severity	Info
Facility	local0
Standard	IEC 62443-3-3 Reference: SR 1.13

Message text	{Protocol}: User {User name} failed to login to {FQHN}.
Example	WBM: User admin failed to login to 192.168.1.105.
Explanation	The user cannot log in to the remote device.
Severity	Error
Facility	local0
Standard	IEC 62443-3-3 Reference: SR 1.13

Message text	{Protocol}: User {User name} has logged out from {FQHN}.
Example	WBM: User admin has logged out.
Explanation	The user has logged out of the remote device.
Severity	Info
Facility	local0
Standard	IEC 62443-3-3 Reference: SR 1.13

Message text	{Protocol}: Connection to {FQHN} established.
Example	VPN 1: Connection to 192.168.1.105 established.
Explanation	VPN connection is established.

Severity	Info
Facility	local0
Standard	IEC 62443-3-3 Reference: n/a (NERC-CIP 005-R1)

Message text	{Protocol}: Connection to {FQHN} closed.
Example	VPN 1: Connection to 192.168.1.105 closed.
Explanation	VPN connection is closed.
Severity	Info
Facility	local0
Standard	IEC 62443-3-3 Reference: n/a (NERC-CIP 005-R1)

Message text	{Protocol}: Connection to {FQHN} failed. Reason: {Reason}.
Example	VPN 1: Connection to 192.168.1.105 failed. Reason: unsuccessful authentication.
Explanation	VPN connection could not be established due to invalid authentication.
Severity	Error
Facility	local0
Standard	IEC 62443-3-3 Reference: n/a (NERC-CIP 005-R3)

Limiting the number of simultaneous sessions

Message text	{Protocol}: The maximum number of {Max sessions} concurrent login session exceeded.
Example	WBM: The maximum number of 2 concurrent login sessions exceeded.
Explanation	The maximum number of parallel connections is exceeded.
Severity	Warning
Facility	local0
Standard	IEC 62443-3-3 Reference: SR 2.7

Protection of check information

Message text	{Protocol}: User {User name} has deleted the logging buffer.
Example	WBM: User admin has deleted the logging buffer.
Explanation	User has deleted event buffer.
Severity	Notice
Facility	local0
Standard	IEC 62443-3-3 Reference: SR 3.9

Nonrepudiation

Message text	{Protocol}: User {User name} has changed configuration.
Example	WBM: User admin has changed configuration.
Explanation	The user has changed all the configuration data by loading a new *.cfg file.
Severity	Info
Facility	local0
Standard	IEC 62443-3-3 Reference: SR 2.12

Message text	{Protocol}: User {User name} has changed {Config detail} configuration.
Example	WBM: User admin has changed OpenVPN configuration.
Explanation	User has changed certain configuration data. You can find a list of the possible "Config details" in the section Tags in Syslog Messages (Page 428).
Severity	Info
Facility	local0
Standard	IEC 62443-3-3 Reference: SR 2.12

Message text	{Protocol}: User {User name} has initiated a reset to factory defaults.
Example	WBM: User admin has initiated a reset to factory defaults.
Explanation	User has initiated a reset to factory settings.
Severity	Info
Facility	local0
Standard	IEC 62443-3-3 Reference: SR 2.12

Communication integrity

Message text	{Protocol}: Integrity verification failed.
Example	VPN: Integrity verification failed.
Explanation	Proof of integrity failed.
Severity	Error
Facility	local0
Standard	IEC 62443-3-3 Reference: SR 3.1

Session integrity

Message text	{Protocol}: Session ID from {IP address} verification failed.
Example	WBM: Session ID verification failed.
Explanation	Session ID is invalid.
Severity	Error
Facility	local0
Standard	IEC 62443-3-3 Reference: SR 3.8

Restoration of the automation system

Message text	{Protocol}: User {User name} activated the Firmware {Version}.
Example	WBM: User admin activated the Firmware V3.0.27.
Explanation	User has successfully activated already loaded firmware.
Severity	Notice
Facility	local0
Standard	IEC 62443-3-3 Reference: SR 7.4

Message text	{Protocol}: User {User name} failed to activate Firmware {Version}.
Example	WBM: User admin failed to activate Firmware V3.0.27.
Explanation	The firmware activation by the user has failed.
Severity	Error

Facility	local0
Standard	IEC 62443-3-3 Reference: SR 7.4

Ciphers used

E

E.1 SSL

The following table lists the encryption methods (ciphers) used by the RTU.

Prime numbers with a maximum length of 4096 bits can be used for Diffie-Hellman (DH) encryption.

The following data is specified for the RTU for each communication class:

- **Services / Protocols (role)**
  - Services / Protocols: The services or protocols currently being used by the RTU
  - (Role): The communication role assumed by the RTU: Client, server or both

The following data is specified in the tables:

- **Category**
  Authentication/encryption methods, protocol version or cipher suite
- **Name**
  Name of the category according to IANA
  You can find an overview of the TLS parameters and cipher suites on the following page:
  Link: (https://www.iana.org/assignments/tls-parameters/tls-parameters.xhtml#tls-parameters-4)
- **Value (hex)**
  Value (hexadecimal) of the suite according to IANA
- **Enabled by default**
  Use in the RTU
  - ✓
    Ciphers considered secure, enabled by default.
  - Legacy
    Ciphers no longer considered secure
    You must explicitly enable use in the RTU.

Communication between the RTU and communication partners

Services / Protocols (role):

- WBM/HTTPS (server)
- FTPS (client)
- SMTPS/STARTTLS (client)
- SINEMA RC autoconfiguration / HTTPS (client)
- MQTT over TLS (client)
- DynDNS (client)
- OpenVPN (client)

Category	Name	Value (hex)	Enabled by default
Cipher Suite	TLS_ECDHE_ECD-SA_WITH_AES_128_GCM_SHA256	0xC02B	✓
Cipher Suite	TLS_ECDHE_RSA_WITH_AES_128_GCM_SHA256	0xC02F	✓
Cipher Suite	TLS_ECDHE_ECDSA_WITH_AES_128_CBC_SHA256	0xC023	✓
Cipher Suite	TLS_ECDHE_RSA_WITH_AES_128_CBC_SHA256	0xC027	✓
Cipher Suite	TLS_ECDHE_ECD-SA_WITH_AES_256_GCM_SHA384	0xC02C	✓
Cipher Suite	TLS_ECDHE_RSA_WITH_AES_256_GCM_SHA384	0xC030	✓
Cipher Suite	TLS_DHE_RSA_WITH_AES_128_GCM_SHA256	0x009E	✓
Cipher Suite	TLS_DHE_RSA_WITH_AES_256_CBC_SHA256	0x006B	✓
Cipher Suite	TLS_DHE_RSA_WITH_AES_128_CBC_SHA256	0x0067	✓
Protocol version	TLS version 1.2	-	✓

Documentation references

F

Where to find Siemens documentation

- Article numbers
  You will find the article numbers for the Siemens products of relevance here in the following catalogs:
  - SIMATIC NET - Industrial Communication / Industrial Identification, catalog IK PI
  - SIMATIC - Products for Totally Integrated Automation and Micro Automation, catalog ST 70

  You can request the catalogs and additional information from your Siemens representative. You will also find the product information in the Siemens Industry Mall at the following address:
  Link: (https://mall.industry.siemens.com)
- Manuals on the Internet
  You will find SIMATIC NET manuals on the Internet pages of Siemens Industry Online Support:
  Link: (https://support.industry.siemens.com/cs/ww/en/ps/15247/man)
  Go to the required product in the product tree and make the following settings:
  Entry type "Manuals"
- Manuals on the data medium
  You will find manuals of SIMATIC NET products on the data medium that ships with many of the SIMATIC NET products.

F.1 /1/

SIMATIC
RTU3000C
Operating instructions
Siemens AG
Link: (https://support.industry.siemens.com/cs/ww/en/ps/21767/man)

F.2 /2/

SIMATIC
RTU3000C
DNP3 Device Profile
Siemens AG
Link: (https://support.industry.siemens.com/cs/ww/en/view/109481154)

F.3 /3/

SIMATIC
RTU3000C
Interoperability list IEC 60870-5-104
Siemens AG
Link: (https://support.industry.siemens.com/cs/ww/en/view/109481299)

F.4 /4/

SIMATIC NET
TeleControl Server Basic (Version V3)
Operating Instructions
Siemens AG
Link: (https://support.industry.siemens.com/cs/ww/en/ps/15918/man)

F.5 /5/

SIMATIC NET
SINEMA Remote Connect - Server
Operating Instructions
Siemens AG
Link: (https://support.industry.siemens.com/cs/ww/en/ps/21816/man)

F.6 /6/

SIMATIC NET
SINEMA Remote Connect - Client
Operating Instructions
Siemens AG
Link: (https://support.industry.siemens.com/cs/ww/en/ps/21816/man)

F.7 /7/

SIMATIC NET
SINEMA Remote Connect
Getting Started
Siemens AG
Link: (https://support.industry.siemens.com/cs/ww/en/ps/21816/man)

F.8 /8/

SIMATIC NET
TIM DNP3
System manual
Siemens AG
Link: (https://support.industry.siemens.com/cs/ww/en/ps/15940/man)

F.9 /9/

SIMATIC NET
TIM 1531 IRC
Manual
Siemens AG
Link: (https://support.industry.siemens.com/cs/ww/en/ps/24710/man)

F.10 /10/

Setting up and working with HART networks

Application Guide
Siemens AG
Current version on the following Internet page:
Link: (https://www.automation.siemens.com/w1/efiles/automation-technology/pi/application_guides/en/LUT400_HART_EN.pdf)

Index

A

Abbreviations/acronyms, 7
Active - parameter, 207
Additional cycle, 40
Antenna GNNS, 417
Antenna position, 105
Article number, 3
Authorized phone number, 189

B

Basic cycle, 40
Battery
    (WBM) change, 202

C

Certificate - maximum size, 122
Certificate-based services, 122
Configuration PC - Web browser, 52
Configuration view, 279
Connecting cables, 417
Connection establishment, 41
Connection establishment delay, 246, 249
Cross references (PDF), 8

D

Data buffering, 49
DHCP client, 160
Diagnostics messages, 142
DNP3
    Device profile, 57
    Protocol, 57
DNS, 133

E

eDRX, 164
E-mail
    sending, 61
E-mail, number of texts, 50
En - block parameter, 289
Enable topic, 272
Encryption, 29
ESMTP, 48
Event buffer, 185
Extended SMTP, 48

F

File names, 136
Files - formats, 136
Firmware
    Download, 59
    Variants, 56
    Version, 3

G

GNSS, 7
GPS, 7
Grounding, 109

H

Hardware product version, 3
Host name (station name), 133
HTTPS for WBM), 52

I

IEC 60870-5
    Device profile, 58
    Protocol, 58
IMEI, 3
Insights Hub generic, 276
Inter-station communication, 56
Inverting (block parameters), 288
IP address: - public, 55
IP configuration, 45

J

JSON generic, 274

K

Keep-alive, 258

L

LAN interface, activating, 39
Lightning protection, 110
Live view, 279
Loading - files, 136
Loading firmware via the SD card, 108
Log file, 136, 194
Logging, 157
Logging - parameters, 208

M

MAC address, 3
MCC, 164
Memory (messages), 49
Memory space, 135
MNC, 164
MQTT, 58, 258
    Protocol, 58

N

Name - parameter, 207

O

Online Support - Firmware, 59
OPC client, 27
OPC server, 27
Open Source software license conditions, 114
OpenVPN
    Server, 30
    Version, 30
Operating modes, 192
Overvoltage protection, 110

P

Password Incorrect entry, 186
Placeholder, 224
PLMN, 164, 167

Q

Quality of Service, 273

R

Role, 189

S

Safety notices, 81
    Use in hazardous areas, 86
    when connecting up, 86
Send buffer, 49
SIEM system, 48, 62
SIM card
    inserting/removing, 107
    Unlocking, 167
SIMATIC PDM, 46, 230, 232
SINEMA RC Server, 30
SMS
    receive, 60
    sending, 60
SMS messages, number of texts, 50
SMS with specified deadline., 43
STARTTLS, 29, 171
Startup behavior (RTU), 105
Status ID - data points, 269
STATUS_COM, 293
STATUS_COUNTER, 293
Syslog, 186

T

Tag table, 278
TCSB, 27
    Version, 53
TeleControl Basic, 56
Telecontrol connection, 48
Telecontrol server, 27
Time stamp, 141
Time stamp (frames), 49
Time-of-day synchronization, 46
TLS, 58, 171, 174, 259

U

User name Incorrect entry, 186
UTC, 140

W

Wake-up call, 42

Wake-up call allowed, 42
Wake-up SMS, 42
WBM, 28, 113
Web Based Management, 113
Web browser, 52
Wireless approvals, 398

X

XML generic, 275