Product Data Sheet

GSPO 80/20K

Heavy duty wheel made of compressed cast nylon

EAN 4047526238568
ID 238568
Customs tariff number 87169090

Made in Germany

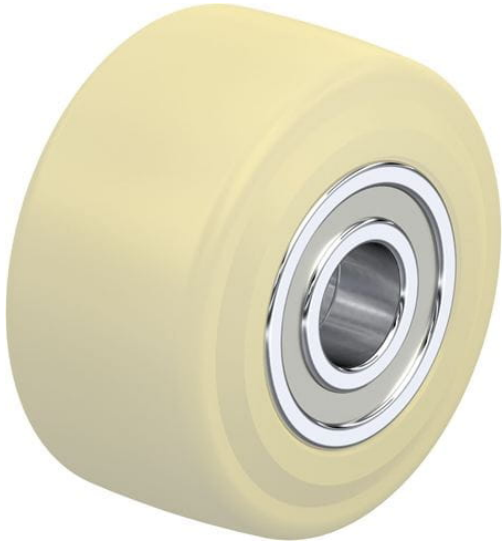

Wheel:
- high-quality cast nylon, reaction-injected, impact resistant, hardness 80 Shore D
- extremely high load capacity
- excellent rolling and swivel resistance
- easy operation on smooth surfaces
- high abrasion resistance
- colour natural beige

Other features:
- high chemical resistance to many aggressive substances
- reduced moisture absorption
- operating temperature: -20 °C to +80 °C, reduced load capacity over +35 °C
- consider the surface pressure on sensitive floors due to high point loads
- Load capacity test in compliance with DIN 12532 with extended breaks to avoid thermal overloading

Technical data:

Wheel Ø (D)	80 mm
Wheel width	40 mm
Load capacity at 4 km/h	1,000 kg
Load capacity (static)	2,500 kg
Bearing type	ball bearing
Axle bore Ø (d)	20 mm
Hub keyway (T1)	45 mm
Temperature resistance min	-20 °C
Temperature resistance max	80 °C
Tread and tyre hardness	80 Shore D
Unit weight	0.4 kg
Non-marking	✓
Non-staining	✓
Antistatic	×
ESD	×
Electrically conductive	×
Corrosion-resistant	×
Heat-resistant	×
Suitable for autoclaves	×

Tread and tyre hardness
80 Shore D

Rolling resistance
excellent

Wear resistance
excellent
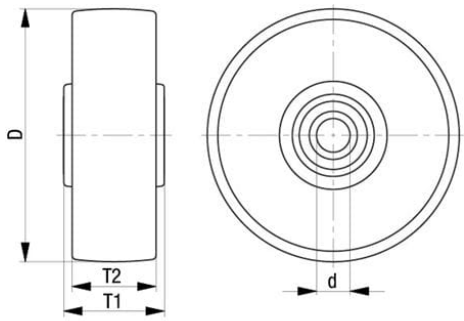
Operating noise / floor surface preservation
satisfactory