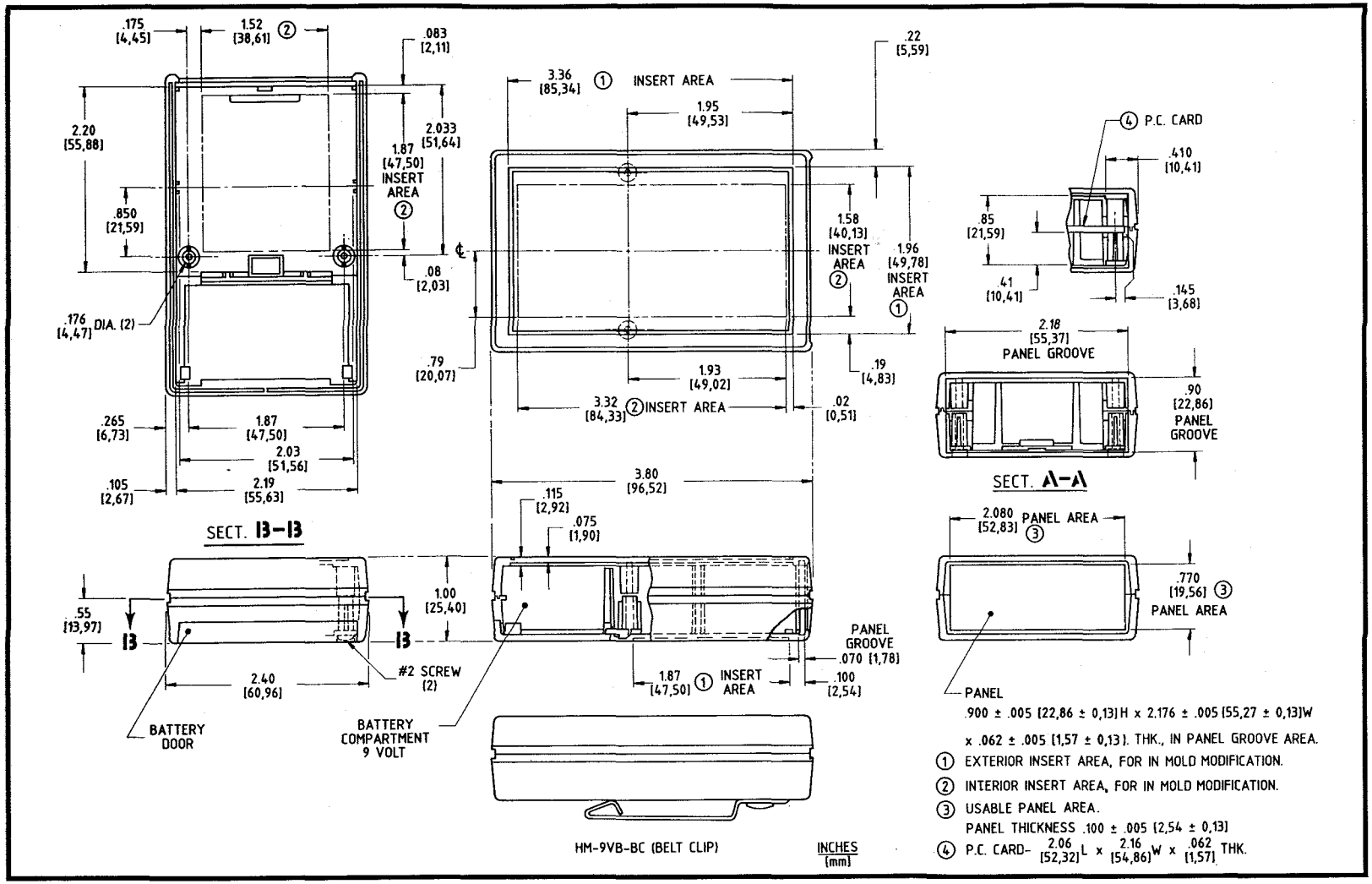

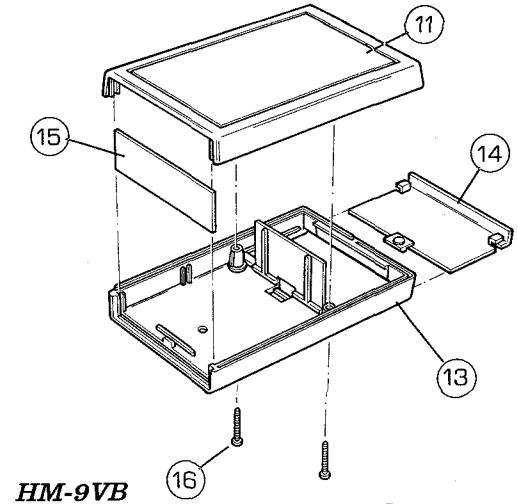

HM-9VB

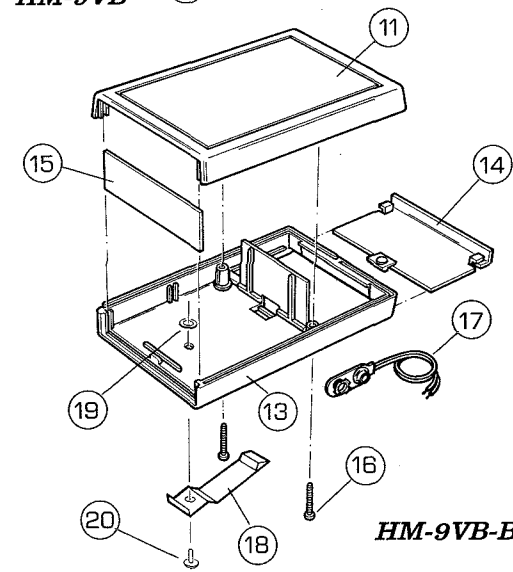

HM-9VB-BC

MODEL NUMBER GENERATION

K = KIT
P = PRODUCTION UNIT

MODEL — *COLOR / MATERIAL CODE*

_ HM-9VB - _ _ _ _

EMI-RFI COATING
S = NICKEL
C = COPPER

61399-00 REV A 1/91

COLOR / MATERIAL CODE		
COLOR	94HB	94VO
BLACK	000	028
GREY	001	024
TAN	002	025
P.C.BONE	039	060

RS 186-9636

RS 242-3865...

ITEM	PART NUMBER	DESCRIPTION	PROD (HM-9VB)	KIT (HM-9VB)	PROD (HM-9VB-BC)	KIT (HM-9VB-BC)
20	60535-01	RIVET	-	-	1	1
19	60534-01	WASHER	-	-	1	1
18	63449-01	BELT CLIP	-	-	1	1
17	60563-01	CONNECTOR, BATTERY(9V)	1	1	1	1
16	60228-02	SCREW, #2X.69LG	2	2	2	2
15	61580-01-XXX	PANEL	-	1	-	1
14	61467-01-XXX	DOOR, BATTERY	1	1	1	1
13	61191-03-XXX	BOTTOM COVER	-	-	1	1
13	61191-01-XXX	BOTTOM COVER	1	1	-	-
11	61032-01-XXX	TOP COVER	1	1	1	1

PACITEC®

HM-9VB, HM-9VB-BC