# TOA SPEAKER SYSTEM

# WIDE RANGE WEATHERPROOF SPEAKER SYSTEM

## CS-64

## CS-154/CS-304

## DESCRIPTION

TOA's CS-64, CS-154, and CS-304 speakers are for outdoor-use, they use wide-range horns that can provide background music or paging announcements which have high quality sound. They are designed to produce high output with an increase of the speaker acoustic conversion efficiency, by the use of a horn in combination with a cone speaker. The CS-64 employs an exponential horn, while the CS-154 and CS-304 use constant directivity horns (90° horizontal) to control sound directivity, realizing uniform and clear sound dispersion over a wide area. These wide-range speakers are also designed to stand up to the rigorous weather conditions when installed outdoors. The speakers' ABS resin enclosure is light in weight, structurally strong and resistant to impacts. Since the enclosures are also treated with weatherproof polyurethane resin paint, they are extremely resistant to the effects of ultraviolet light, ensuring many years of reliable operation. The speakers also comply with IP-64 Standard requirements for dust proof and waterproof capabilities. In addition, the internal speaker parts feature a special weatherproof treatment to enhance the waterproof properties of the entire speaker. Stainless-steel brackets and screws further protect the unit from rust and corrosion. Speaker impedance can be easily changed externally with a rotary switch, facilitating changes in impedance during and after speaker installation.

CS-64: 6 W/3 W/1 W (100 V line) and 6 W/3 W/1.5 W/0.5 W (70 V line)

CS-154: 15 W/10 W/5 W (100 V line) and 15 W/7.5 W/5 W/2.5 W (70 V line)

CS-304: 30 W/20 W/10 W (100 V line) and 30 W/15 W/10 W/5 W (70 V line)

## FEATURES

- Exponential horn (CS-64) and constant directivity horn (CS-154/CS-304) improve directivity characteristics and ensure uniform and clear sound dispersion.
- Lightweight ABS resin enclosure that is mechanically strong and resistant to impact.
- Weatherproof polyurethane resin paint permits the speaker to stand up to many years of outdoor installation.
- Stainless steel hardware protects the speaker from corrosion.
- The enclosure complies with IP-64 Standards for dust proof and waterproof characteristics.
- Rotary impedance selector switch facilitates external changes in impedance during and after speaker installation.

TOA

# CS-64

## CHARACTERISTIC DIAGRAMS

### Frequency Response(1W/1m:1/3 Octave Pink Noise)

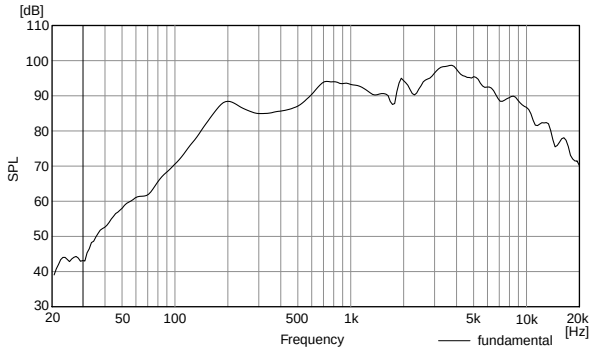


### Beamwidth vs. Frequency

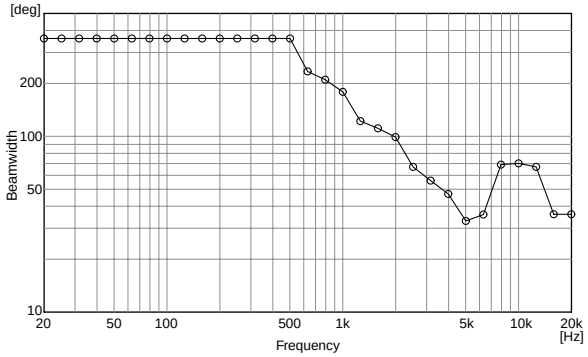


### Directivity Factor vs. Frequency

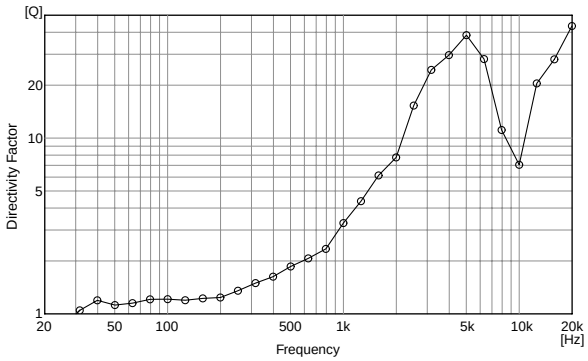


### Polar Response

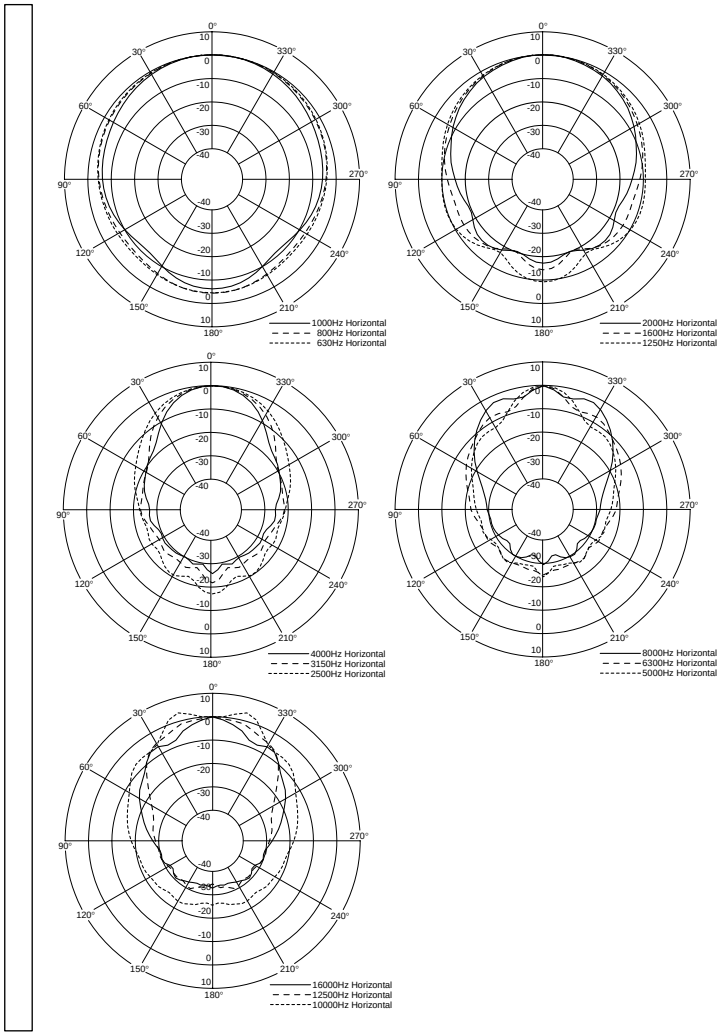

# CS-154

## CHARACTERISTIC DIAGRAMS

### Frequency Response(1W/1m:1/3 Octave Pink Noise)

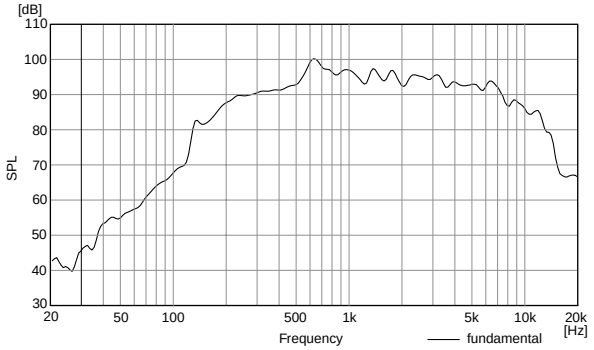


### Beamwidth vs. Frequency

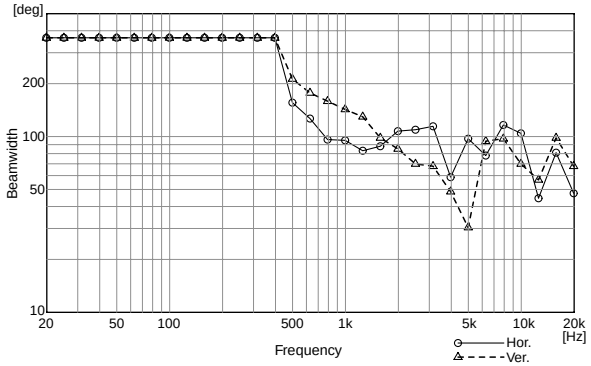


### Directivity Factor vs. Frequency

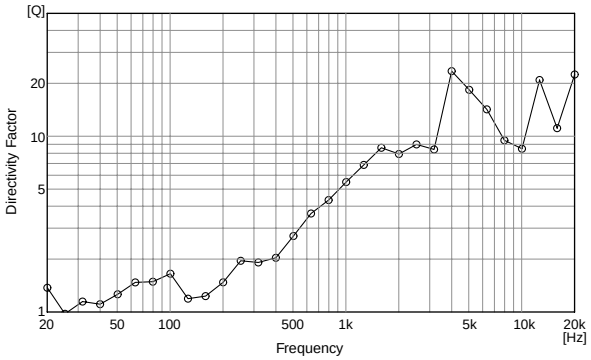


### Polar Response

horizontal

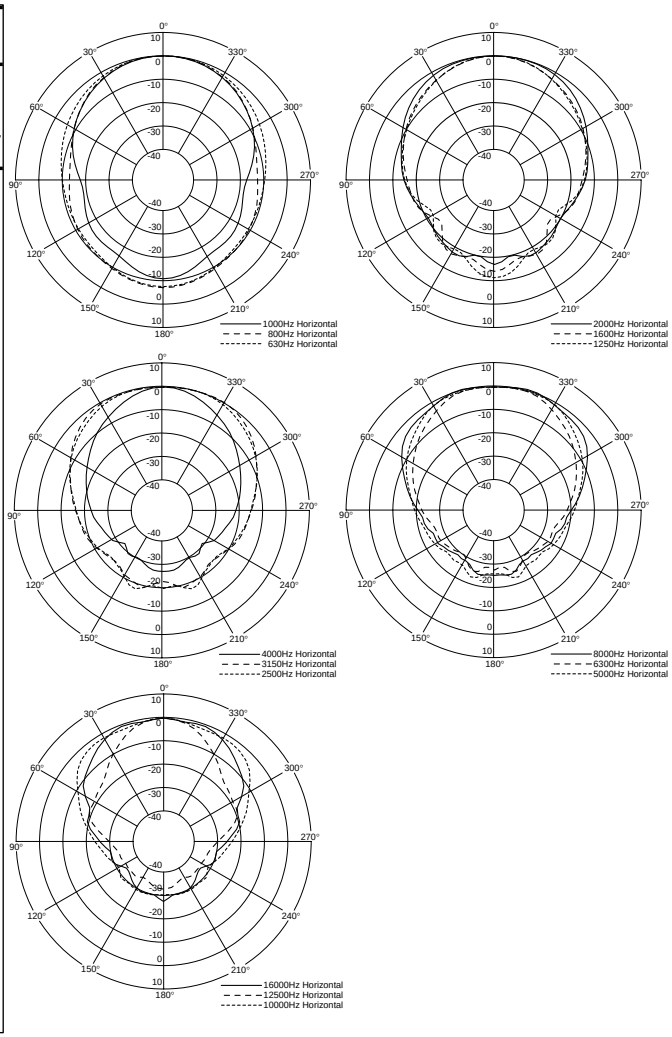


vertical

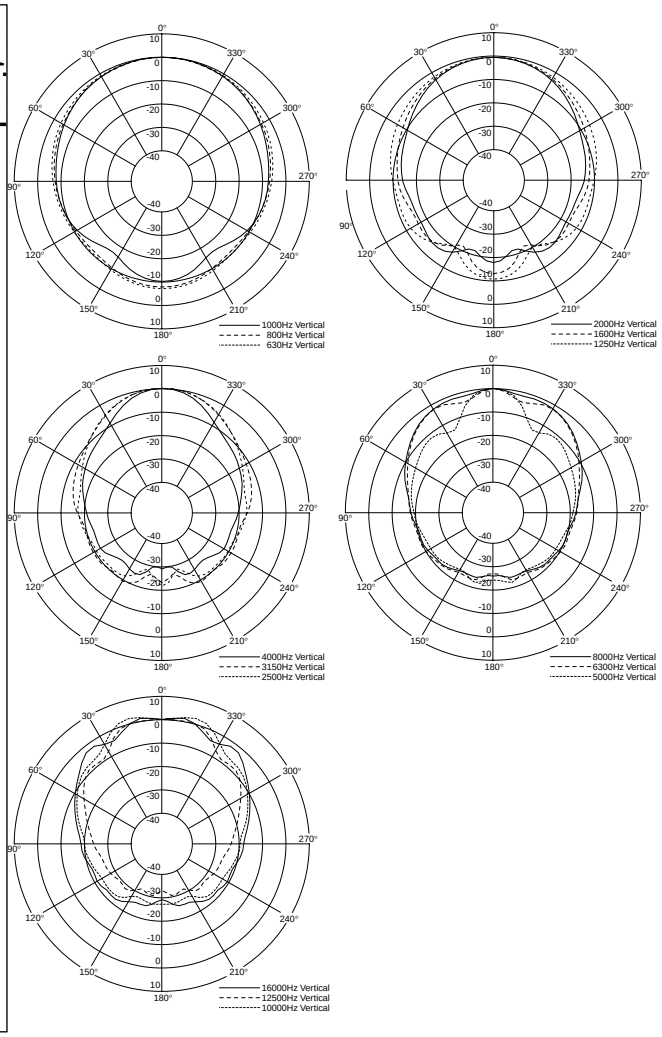

# CS-304

## CHARACTERISTIC DIAGRAMS

### Frequency Response(1W/1m:1/3 Octave Pink Noise)

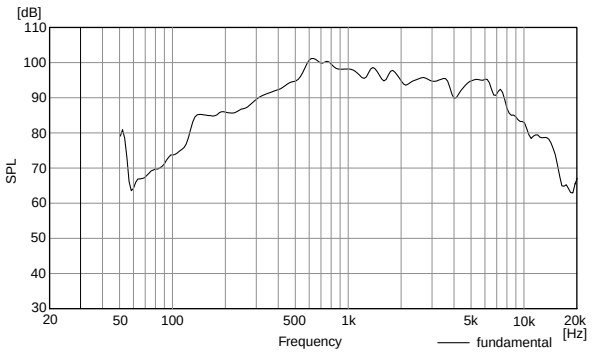


### Beamwidth vs. Frequency

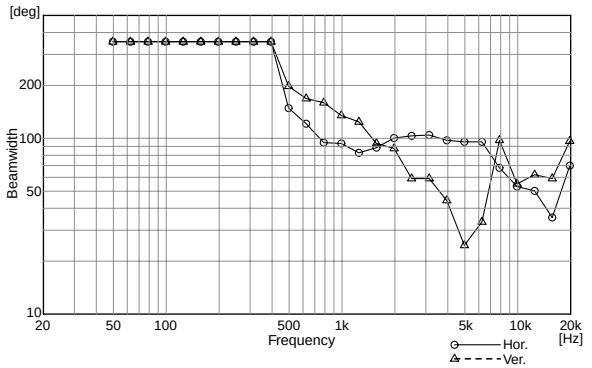


### Directivity Factor vs. Frequency

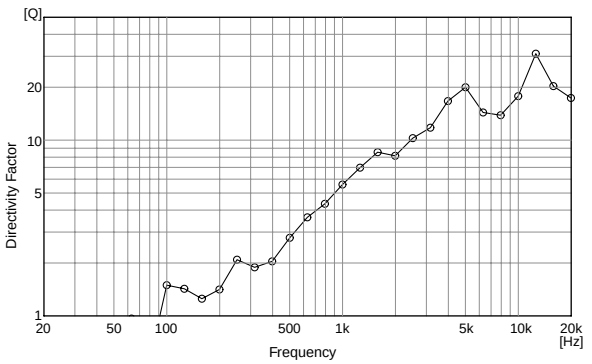


### Polar Response

horizontal

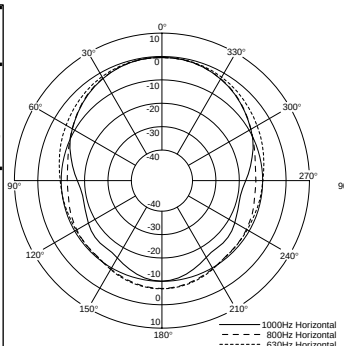


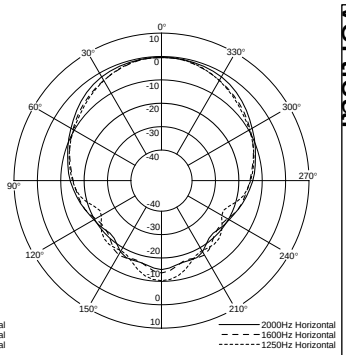


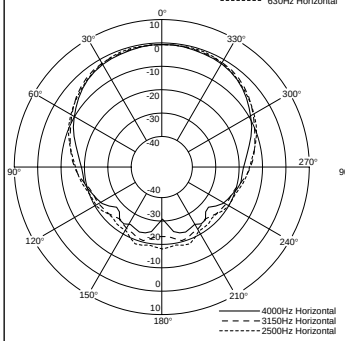


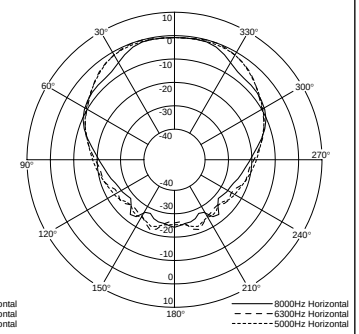


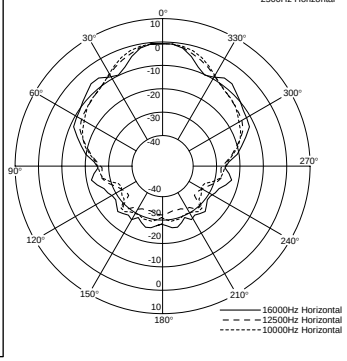


vertical

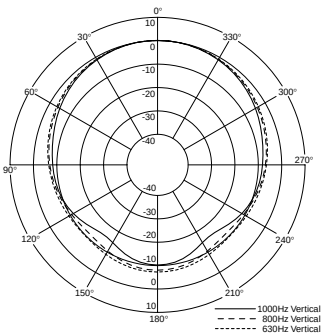


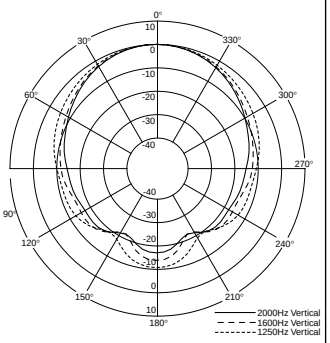


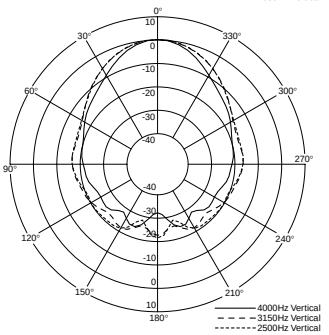


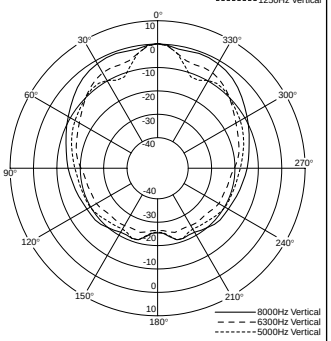


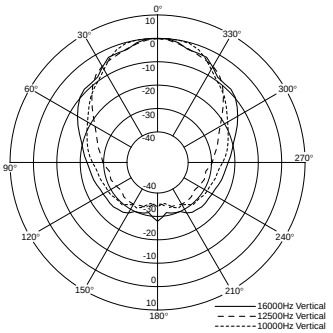

| CS-64 | |
|---|---|
| **Rated Input** | 6 W |
| **Rated Impedance** | 100 V line : 1.7 kΩ (6 W), 3.3 kΩ (3 W), 10 kΩ (1 W)<br>70 V line : 830 Ω (6 W), 1.7 kΩ (3 W), 3.3 kΩ (1.5 W), 10 kΩ (0.5 W) |
| **Sound Pressure Level** | 96 dB (1 W, 1 m) |
| **Frequency Response** | 130 – 13,000 Hz |
| **Speaker Component** | 12 cm cone – type dynamic speaker (treated for splash proof) |
| **Speaker Code** | 2 – core cabtype cord with diameter of 6 mm |
| **Finish** | Horn, cover : ABS resin, off – white, paint<br>Bracket : Stainless steel<br>Punched net : Surface treated steel plate, dark – gray, powder coating<br>Screw : Stainless steel |
| **Dimensions** | 233 (W) x 224 (H) x 208 (D) mm |
| **Weight** | 1.5 kg |

| CS-154 | |
|---|---|
| **Rated Input** | 15 W |
| **Rated Impedance** | 100 V line : 670 Ω (15 W), 1 kΩ (10 W), 2 kΩ (5 W)<br>70 V line : 330 Ω (15 W), 670 Ω (7.5 W), 1 kΩ (5 W), 2 kΩ (2.5 W) |
| **Sound Pressure Level** | 97 dB (1 W, 1 m) |
| **Frequency Response** | 150 – 15,000 Hz |
| **Speaker Component** | 12 cm cone – type dynamic speaker (treated for splash proof) |
| **Horizontal Directivity** | Constant directivity horn 90° (± 45° horizontal from front axis)<br>Over 93 dB (1 W, 1 m), 3 kHz at ± 45° |
| **Speaker Code** | 2 – core cabtype cord with diameter of 6 mm |
| **Finish** | Horn, cover : ABS resin, off – white, paint<br>Bracket : Stainless steel<br>Net : Aluminium, gray, paint<br>Screw : Stainless steel |
| **Dimensions** | 366 (W) x 230 (H) x 272 (D) mm |
| **Weight** | 2.8 kg |

| CS-304 | |
|---|---|
| **Rated Input** | 30 W |
| **Rated Impedance** | 100 V line : 330 Ω (30 W), 500 Ω (20 W), 1 kΩ (10 W)<br>70 V line : 170 Ω (30 W), 330 Ω (15 W), 500 Ω (10 W), 1 kΩ (5 W) |
| **Sound Pressure Level** | 98 dB (1 W, 1 m) |
| **Frequency Response** | 120 – 15,000 Hz |
| **Speaker Component** | 12 cm cone – type dynamic speaker (treated for splash proof) |
| **Horizontal Directivity** | Constant directivity horn 90° (± 45° horizontal from front axis)<br>Over 93 dB (1 W, 1 m), 3 kHz at ± 45° |
| **Speaker Code** | 2 – core cabtype cord with diameter of 6 mm |
| **Finish** | Horn, cover : ABS resin, off – white, paint<br>Bracket : Stainless steel<br>Net : Aluminium, gray, paint<br>Screw : Stainless steel |
| **Dimensions** | 366 (W) x 230 (H) x 272 (D) mm |
| **Weight** | 3.1 kg |

## CS-64

### APPEARANCE AND DIMENSIONAL DIAGRAMS

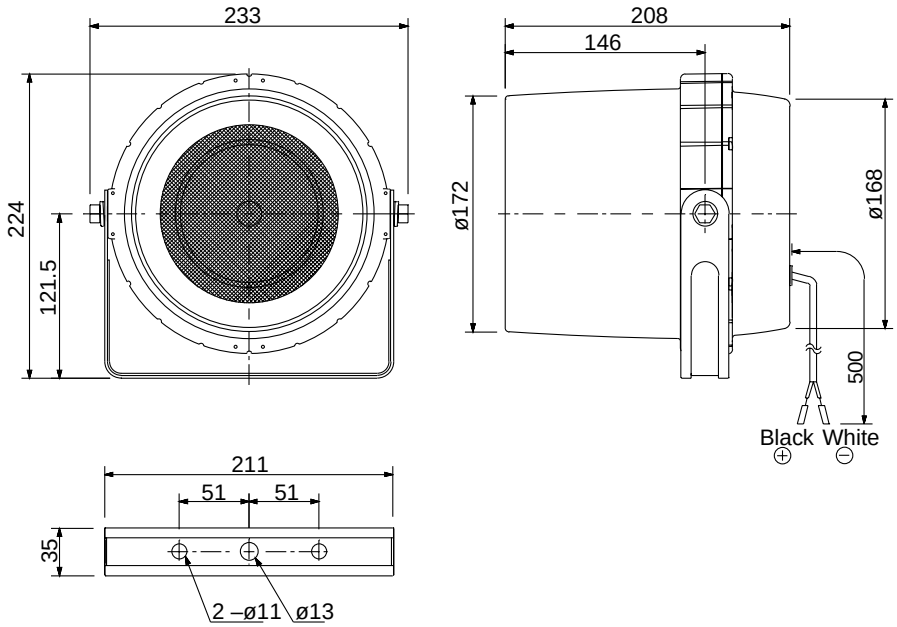


## CS-154/CS-304

### APPEARANCE AND DIMENSIONAL DIAGRAMS

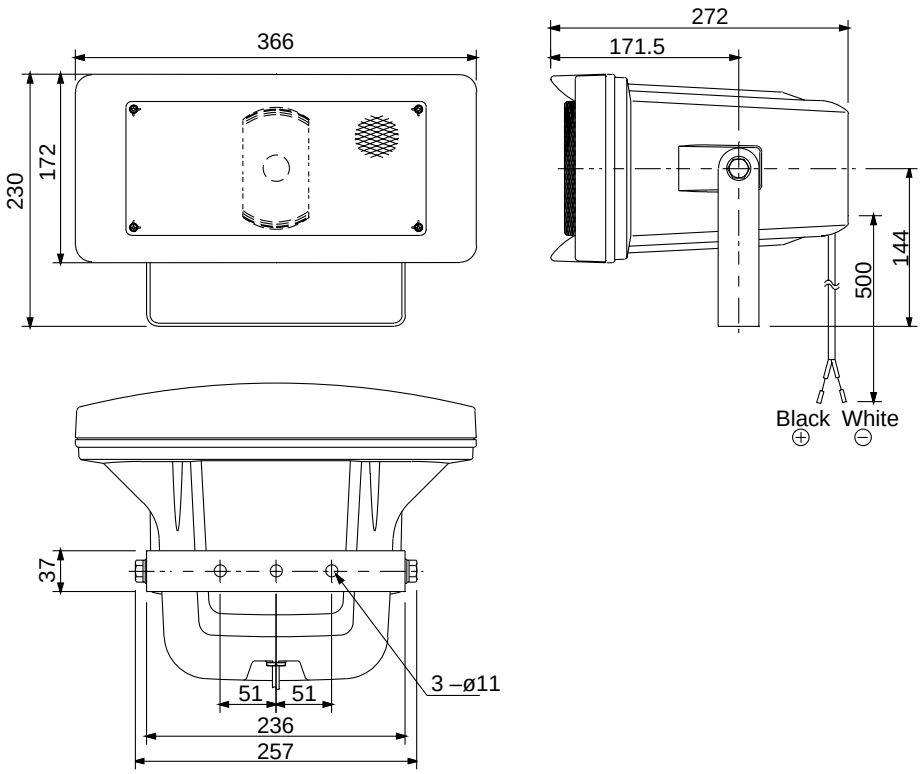


TOA

TOA Corporation

Specifications are subject to change without notice.
Printed in Japan (912) 833-62-247-50 C.O