Nov.1.2016 Copyright 2016 HIROSE ELECTRIC CO., LTD. All Rights Reserved.

	COUNT	DESCRIPTION OF REVISIONS	BY	CHKD	DATE		COUNT	DESCRIPTION OF REVISIONS	BY	CHKD	DATE
△					. .	△					. .
△					. .	△					. .
△					. .	△					. .

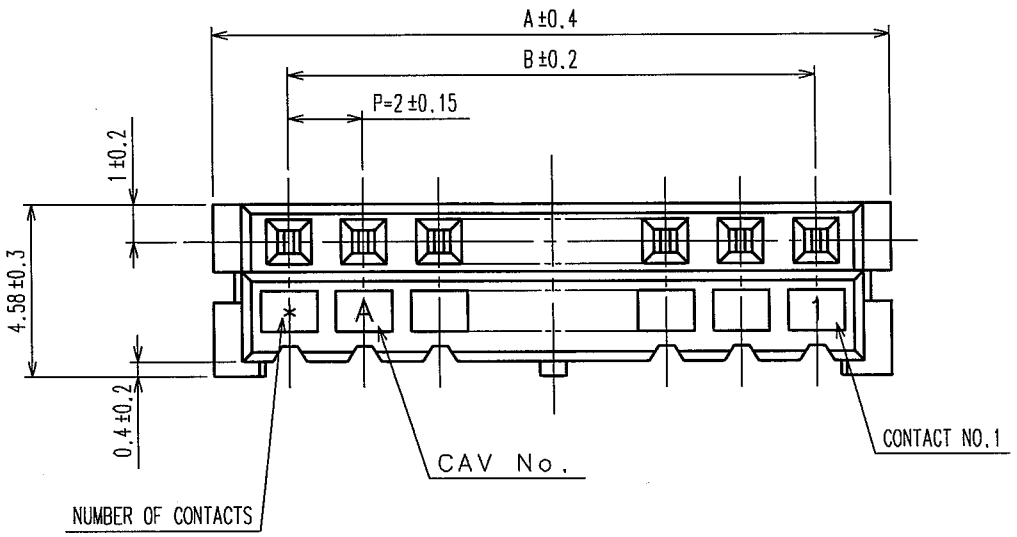

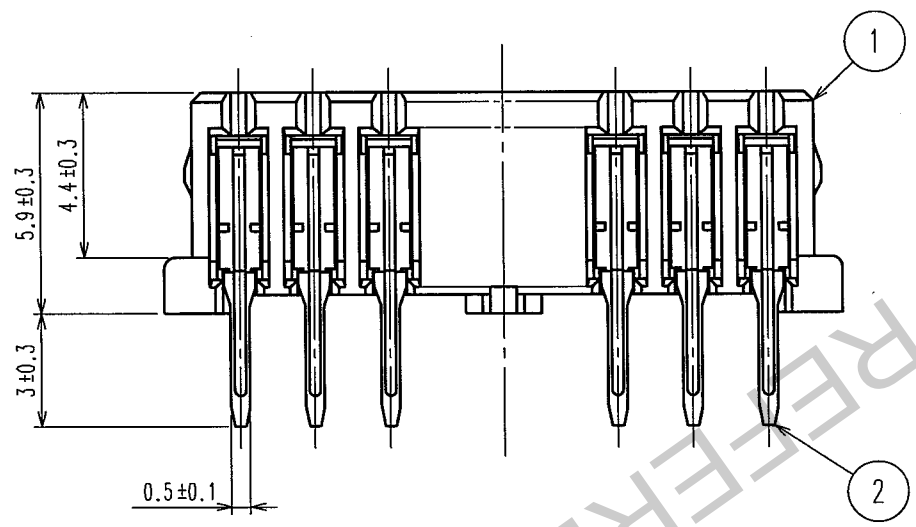

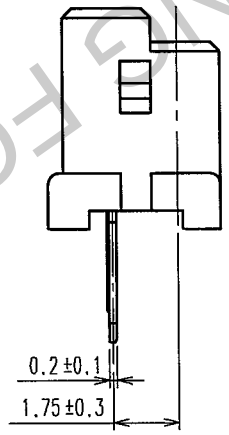

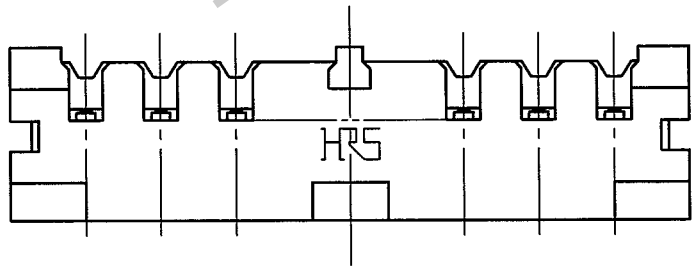

CODE NO.	PART NO.	NUMBER OF CONTACT	A	B
CL543-0048-6-25	DF3- 2S-2DSA(25)	2	6.0	2.0
CL543-0049-9-25	DF3- 3S-2DSA(25)	3	8.0	4.0
CL543-0050-8-25	DF3- 4S-2DSA(25)	4	10.0	6.0
CL543-0051-0-25	DF3- 5S-2DSA(25)	5	12.0	8.0
CL543-0052-3-25	DF3- 6S-2DSA(25)	6	14.0	10.0
CL543-0053-6-25	DF3- 7S-2DSA(25)	7	16.0	12.0
CL543-0054-9-25	DF3- 8S-2DSA(25)	8	18.0	14.0
CL543-0055-1-25	DF3- 9S-2DSA(25)	9	20.0	16.0
CL543-0056-4-25	DF3-10S-2DSA(25)	10	22.0	18.0
CL543-0057-7-25	DF3-11S-2DSA(25)	11	24.0	20.0
CL543-0058-0-25	DF3-12S-2DSA(25)	12	26.0	22.0
CL543-0059-2-25	DF3-13S-2DSA(25)	13	28.0	24.0
CL543-0060-1-25	DF3-14S-2DSA(25)	14	30.0	26.0
CL543-0061-4-25	DF3-15S-2DSA(25)	15	32.0	28.0

RECOMMENDED PATTERN

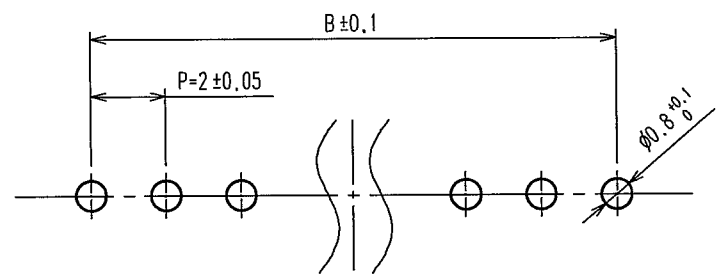

NO.	MATERIAL	FINISH, REMARKS
2	PHOSPHOR BRONZE	TIN PLATED 2μm min
1	POHYAMIDE	UL94V-0(BLACK)

NO.	MATERIAL	FINISH, REMARKS
4	S.PVC	STOPPER
3	RIGID POLYVINYLCHLORIDE	ELECTROSTATIC PROTECTION, CLEAR

CODE NO.(OLD)	DRAWN	DESIGNED	CHECKED	APPROVED	RELEASED
CL	M.Nakamoto '04.03.22	H.Uneharа 04.03.22	T.Miyazaki 04.03.22	T.Ono 04.03.22	. .

SCALE 5 : 1	DRAWING NO. EDC3-162329-10	PART NO. DF3-*S-2DSA(25)
UNITS mm	HRS HIROSE ELECTRIC CO., LTD	CODE NO. CL543- 1/2

TO

DRAWING FOR REFERENCE

FORM NO.229

Nov.1.2016 Copyright 2016 HIROSE ELECTRIC CO., LTD. All Rights Reserved.

	COUNT	DESCRIPTION OF REVISIONS	BY	CHKD	DATE		COUNT	DESCRIPTION OF REVISIONS	BY	CHKD	DATE
△					. .	△					. .
△					. .	△					. .
△					. .	△					. .

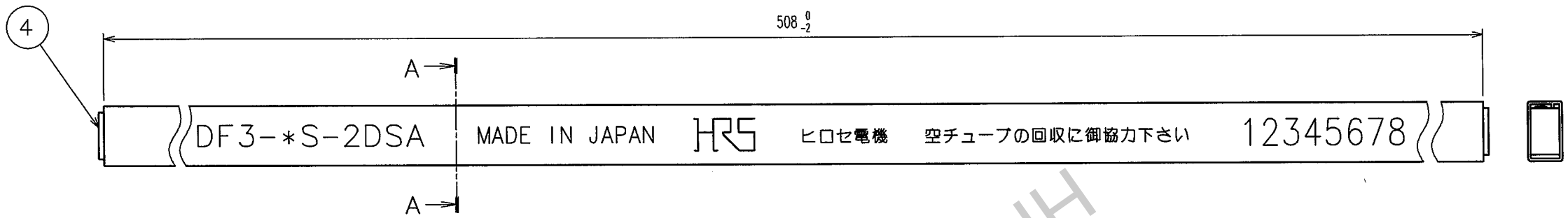

NOTES1. NUMBER OF CONNECTERS PER A MAGAZINE CASE SHALL BE IN ACCORDANCE WITH THE LIST.

2. THESE CONNECTORS SHALL BE ON SALED IN ACCORDANCE WITH THE MULTIPLE QUANTITY ON THE LIST.

A-A(5:1)

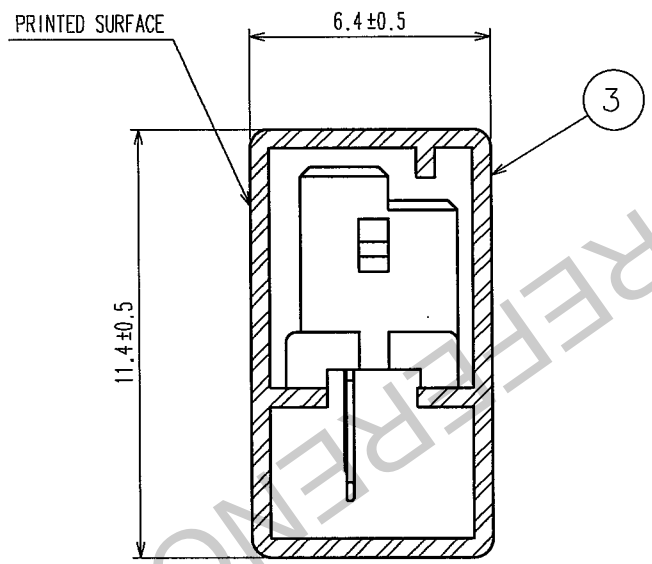

CODE NO.	PART NO.	NUMBER OF CONNECTORS
CL543-0048-6-25	DF3- 2S-2DSA(25)	80
CL543-0049-9-25	DF3- 3S-2DSA(25)	60
CL543-0050-8-25	DF3- 4S-2DSA(25)	48
CL543-0051-0-25	DF3- 5S-2DSA(25)	40
CL543-0052-3-25	DF3- 6S-2DSA(25)	34
CL543-0053-6-25	DF3- 7S-2DSA(25)	30
CL543-0054-9-25	DF3- 8S-2DSA(25)	27
CL543-0055-1-25	DF3- 9S-2DSA(25)	24
CL543-0056-4-25	DF3-10S-2DSA(25)	21
CL543-0057-7-25	DF3-11S-2DSA(25)	20
CL543-0058-0-25	DF3-12S-2DSA(25)	18
CL543-0059-2-25	DF3-13S-2DSA(25)	17
CL543-0060-1-25	DF3-14S-2DSA(25)	16
CL543-0061-4-25	DF3-15S-2DSA(25)	15

HRS DRAWING FOR REFERENCE

NO.	MATERIAL	FINISH, REMARKS	NO.	MATERIAL	FINISH, REMARKS

CODE NO.(OLD)	DRAWN	DESIGNED	CHECKED	APPROVED	RELEASED
CL	M.Nakamoto '04.03.22	H. Umehara 04.03.22	T. Miyazaki 04.03.22	T. Ona 04.03.22	. .

SCALE FR:EE	DRAWING NO. EDC3-162329-10	PART NO. DF3-*S-2DSA(25)
UNITS mm	HRS HIROSE ELECTRIC CO., LTD	CODE NO. CL543- 2/

TO

FORM NO.229