Hydraulic Filler Breather Filters

Features

- 2 stages of absorbent provide an optimal combination of drying efficiency and water retention
- Pleated air filter with 2 µm filtration rating
- Reusable base with check (intake) and bypass (outflow) valves
- Water vapor absorbant sillica gel
- Non Toxic
- Non corrosive
- Environmentally disposable

RS PRO

Hydraulic Filler Breather Filters

RS Stock No.: 0813978



RS PRO is the own brand of RS. The RS PRO Seal of Approval is your assurance of professional quality, a guarantee that every part is rigorously tested, inspected, and audited against demanding standards. Making RS PRO the Smart Choice for our customers.

Hydraulic Filler Breather Filters

Product Description

These new RS PRO Breather dryer range (with extended service life) was mainly developed for wind industry applications. The special features of the filter are the two separated chambers storing two absorbent type with different water holding capacities and response behaviours. Four check valves can be integrated in the filter bottom in order to protect the absorbent material, avoiding saturation during system downtime, The dirt holding capacity of the filter is increased through the star-pleated air breather filter element. All included new features contribute to an extended lifetime of the breather dryer.

Features & Benefits:

- 2 stages of absorbent provide an optimal combination of drying efficiency and water retention
- Pleated air filter with 2 µm filtration rating
- Reusable base with check (intake) and bypass (outflow) valves
- Water vapor absorbent sillica gel
- Non Toxic
- Non corrosive
- Environmentally disposable

Application:

- New and Retrofit Applications
- Gear Boxes
- Hydraulic Reservoirs
- Wind Turbines

Specifications

Product Type	Desiccant Breather
Cap Diameter	136mm
Cap Material	40 ABS plastic
Filtration Size	2 µm
Retention Capacity	26g
Colour	Clear plastic body -polycarbonate in DLP plastic, and impact-modified Plexiglas
Mount Type	Push-In
Seal Material	Nitrile Rubber (NBR)
Maximum Operating Temperature	93°C
Minimum Operating Temperature	-29°C
Storage Temperature From	From -40°C
Compatible Hole Diameter	38mm
Series	RS PRO

Hydraulic Filler Breather Filters

Dimensions& more Technical Informations

Water Retention Capacity (gallon)		Optimal Air Flow Rate (SCFM)	Max. Drying Capacity at Medium Humidity (SCF)	Max. Drying Capacity at High Humidity (SCF)
Max.	Actual			
.13	.08	28	880	530

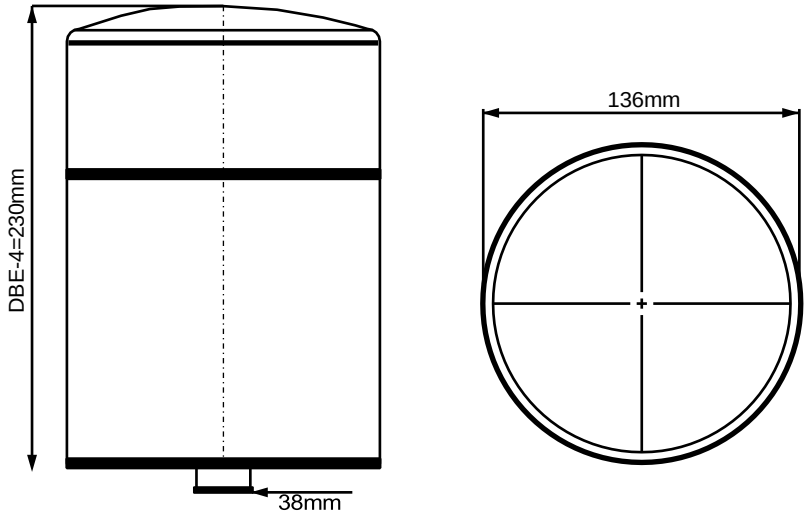

Hydraulic Filler Breather Filters

Installation Instructions

1. First, remove both the base (e.g. DBEP1R.04) and the cartridge element (e.g. R-DBE-2; R-DBE-4; R-DBE-10) from the packaging.



2. Take the base and fasten it to the port in the reservoir until it is tight. You can use an wn



3. Prior to installation, remove the protective yellow cover from the cartridge.



4. Place the cartridge on the base and twist it clockwise (as viewed from the top) until it is seated tightly. A strap wrench may be used to tighten the cartridge.



5. After the cartridge is completely screwed in, turn it counter-clockwise **1/8 turn**.



Storage Instructions

- Store in a dry place.
- Store in a cool place ≤104°F (≤40°C). *"Store in a cool place ≤104°F (≤40°C)"*

Service Instructions

1. Periodically check the breather to see if the silica gel has changed colour. When the colour changes from red to orange, it is time to change the breather.
2. Unpack a new cartridge with the same part number as the used one (e.g. R-DBE-2; R-



DBE-4; R-DBE-10).



3. To remove the used cartridge, turn it counter-clockwise (as viewed from the top) until it is free from the base.

4. Discard the old cartridge.



5. Remove the protective yellow cover from the new cartridge.

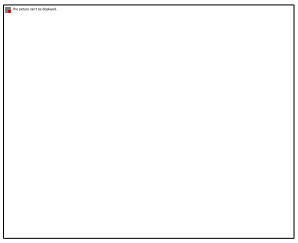

6. Place the new cartridge on the base and twist it clockwise (as viewed from the top) until it is seated tightly. A strap wrench may be used to tighten the cartridge.



7. After the cartridge is completely screwed in, turn it counter-clockwise **1/8 turn**.



Hydraulic Filler Breather Filters

Approvals

Declarations	MFR Declaration of Conformity