THIS DRAWING IS UNPUBLISHED. RELEASED FOR PUBLICATION -,- .
© COPYRIGHT - By - ALL RIGHTS RESERVED.

| LOC | DIST |
|---|---|
| A1 | — |

VERWENDET FÜR
E 88-52 562

REVISIONS

| P | LTR | DESCRIPTION | DATE | DWN | APVD |
|---|---|---|---|---|---|
| | C | TOLERANZ +/-0.25 BEI MASS 7.62 HINZU | 29-JAN-02 | MAHNKE | ZITZ |
| | C1 | REVISED PER ECO-09-024717 | 05NOV09 | KK | — |
| | C2 | ECR-10-026307 | 12JAN11 | KK | HMR |

| POLZ. PRO REIHE | L +0.3 −0.1 | BESTELL-NR. | | |
|---|---|---|---|---|
| – | – | | – | |
| 2 | 5.08 | 829 264 | -2 | |
| 3 | 7.62 | | -3 | |
| 4 | 10.16 | | -4 | |
| 5 | 12.70 | | -5 | |
| 6 | 15.24 | | -6 | |
| 7 | 17.78 | | -7 | |
| 8 | 20.32 | | -8 | |
| 9 | 22.86 | | -9 | |
| 10 | 25.40 | 1- | -0 | |
| 11 | 27.94 | 1- | -1 | |
| 12 | 30.48 | 1- | -2 | |
| 13 | 33.02 | 1- | -3 | |
| 14 | 35.56 | ~~1-~~ | ~~-4~~ | OBSOLETE |
| 15 | 38.10 | 1- | -5 | |
| 16 | 40.64 | 1- | -6 | |
| 17 | 43.18 | 1- | -7 | |
| 18 | 45.72 | 1- | -8 | |
| 19 | 48.26 | 1- | -9 | |
| 20 | 50.80 | ~~2-~~ | ~~-0~~ | OBSOLETE |
| 21 | 53.34 | ~~2-~~ | ~~-1~~ | 6 |
| 22 | 55.88 | 2- | -2 | |
| 23 | 58.42 | 2- | -3 | |
| 24 | 60.96 | ~~2-~~ | ~~-4~~ | OBSOLETE |
| 25 | 63.50 | 2- | -5 | |
| 26 | 66.04 | 2- | -6 | |
| 27 | 68.58 | ~~2-~~ | ~~-7~~ | 6 |
| 28 | 71.12 | ~~2-~~ | ~~-8~~ | OBSOLETE |
| 29 | 73.66 | ~~2-~~ | ~~-9~~ | 6 |
| 30 | 76.20 | ~~3-~~ | ~~-0~~ | 6 |
| 31 | 78.74 | ~~3-~~ | ~~-1~~ | 6 |
| 32 | 81.28 | 3- | -2 | |
| 33 | 83.82 | ~~3-~~ | ~~-3~~ | 6 |
| 34 | 86.36 | ~~3-~~ | ~~-4~~ | 6 |
| 35 | 88.90 | ~~3-~~ | ~~-5~~ | 6 |
| 36 | 91.44 | ~~3- 829 264 -6~~ | | OBSOLETE |

WAR NR. 88-52 562

PASSEND ZU _

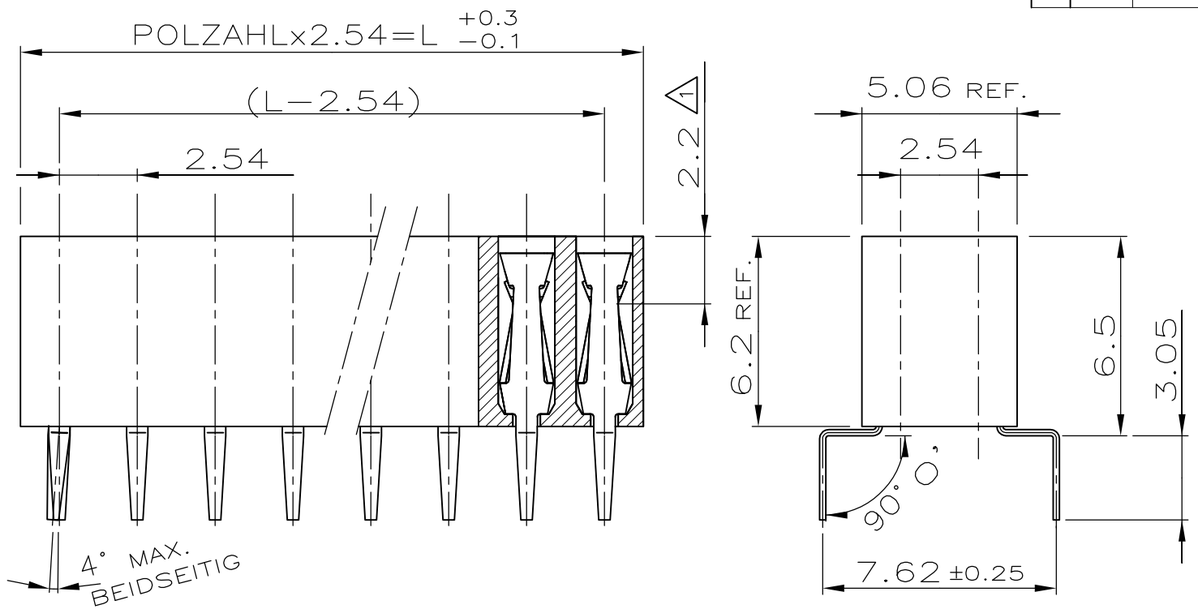


1. KONTAKTPUNKT
2. IM KONTAKTBEREICH 0.8µm GOLD ÜBER 1.3µm Ni
   IM LÖTBEREICH 2.5µm ZINN ÜBER 1.3µm Ni
3. EMPFOHLENE LEITERPLATTENDICKE 1.6mm
4. STECKBAR MIT MODU II STIFTEN ϕ/□ 0.63
5. HV100 BUCHSENSTECKER VERPACKT IN ANTI-STATISCHEM BLISTER
6. OBSOLETE PARTS: OBSOLETE CIS STREAMLINING PER D.RENAUD/D.SINISI

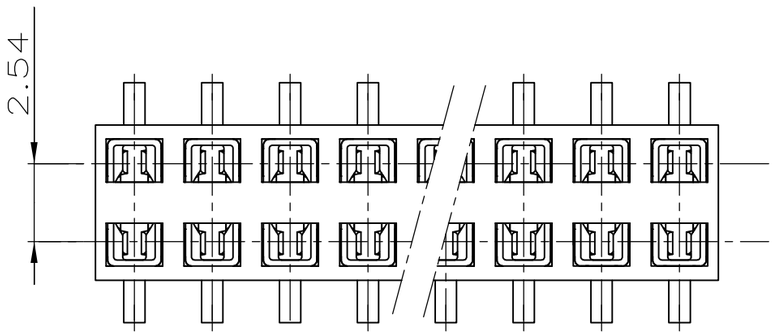


BOHRBILD

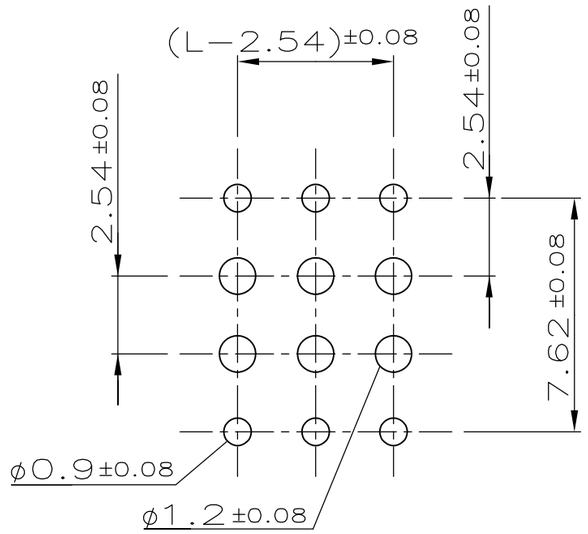


ZEICHNUNG GÜLTIG AB KW 06/96

| BESTELL-NR. | POS. | STÜCK | BENENNUNG EINZELTEIL | WERKSTOFF | OBERFLÄCHE / FARBE |
|---|---|---|---|---|---|
| | | | HV 100 KONTAKT | CuSn | 2 |
| – | – | – | HV 100 GEHÄUSE | PBTP GV | GRÜN |

THIS DRAWING IS A CONTROLLED DOCUMENT.

DIMENSIONS: mm

TOLERANCES UNLESS OTHERWISE SPECIFIED: ±0.2mm
0 PLC ± –
1 PLC ± –
2 PLC ± –
3 PLC ± –
4 PLC ± –
ANGLES ± 3°

MATERIAL –
FINISH –

DWN A.HO 26.05.88
CHK M.SCHAARSCHMIDT 06.12.90
APVD —
PRODUCT SPEC —
APPLICATION SPEC —
WEIGHT —

TE Connectivity

NAME
HV 100 BUCHSENSTECKER
ZWEIREIHIG,6.2mm HOCH,GOLD

| SIZE | CAGE CODE | DRAWING NO | RESTRICTED TO |
|---|---|---|---|
| A3 | 00779 | C-829264 | — |

CUSTOMER DRAWING | SCALE 5:1 | SHEET 1 OF 1 | REV C2

1470-19 (3/11)