SENSOFIX series 14

Art.-Code: 149011

- large freedom of movement makes it simple to adjust the sensor
- assemble on plates, profiles, sheet metals with only one screw
- mounting at a rod ø 8 mm is possible
- different mounting versions
- Higher operational safety of the sensors benefits though the exact adjustment

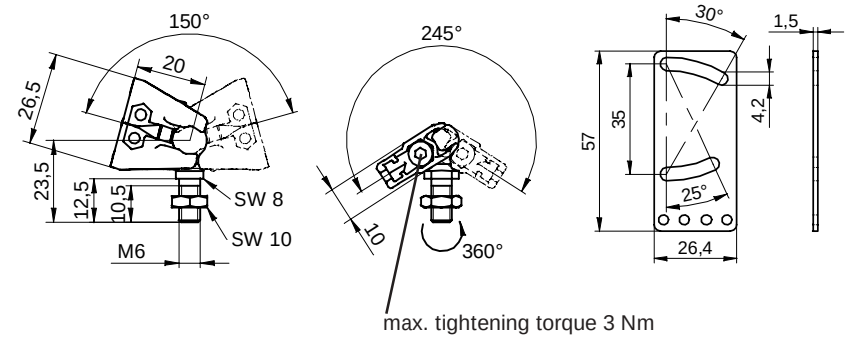

mounting screws included
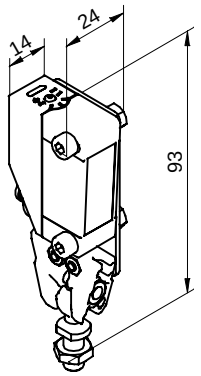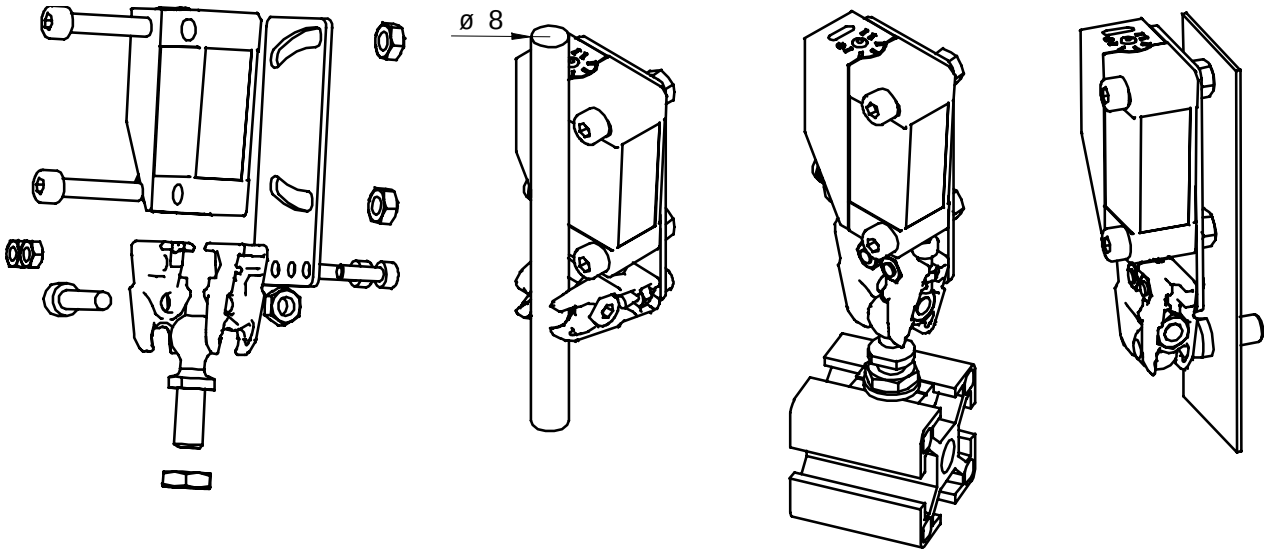
Technical data	
Material: jaw	stainless steel
Material: screw with ball-shaped head	steel galvanized
Material: steel sheet	stainless steel
Material: screw, nut	steel galvanized