- **Port size: G1/8**
- **System pressure (unit bar, psi, Mpa, KPa, kgf/cm², mmHg, InHg or mmH$_2$O) selectable**
- **High accuracy and resolution**
- **Switching status indicated by LED**
- **Output: 2 x PNP or 2 x NPN**
- **Versions with analogue output signal on request**

Technical features

Medium:
Compressed air, filtered, lubricated or non-lubricated
Pressure range:
-1 ... 10 bar (-14,5 ... 145 psi)
-1 ... 1 bar (-14,5 ... 14,5 psi)
Display:
3 1/2 digit LED
Mounting position:
Optional
Repeatability (switch output):
⩽ ±0,2% of full scale (FS) ±1 digit - without temperature sensitivity

Response time:
±2,5 ms
Shockproof:
100 g (980 m/s²), xyz
Vibrationproof:
88 g, 10 - 55 Hz, xyz
Degree of protection acc. to DIN 40050:
IP65 (with mounted dust proof protector)
Weight:
83g

Temperature sensitivity:
⩽ 2% of full scale (FS) of detected pressure (+25°C, +77°F)
Ambient/Media temperature:
0 ... +50°C (32 ... +122°F)
Storage temperature:
-20 ... +60°C (-4 ... +140°F)
No condensation or freezing
Air supply must be dry enough to avoid ice formation at temperature below +2°C (+35°F)
FS = full scale

Materials:
Body: PC

Electronical parameters

Electrical connection:
M12 x 1
Power supply:
12 ... 24 V d.c.
24 V d.c. (PNP) maximum
30 V d.c. (NPN) maximum
Residual voltage:
⩽ 1 V (load current 80 mA)

Permissible residual ripple:
10% or less (P-P)
Current consumption:
⩽ 50 mA
Load current:
80 mA maximum (with output short circuit protection)

Switching mode:
PNP or NPN
Indicator:
Green LED (OUT1),
Red LED (OUT2)

Insulation resistance:
50 MΩ min (at 500 V d.c. (between case and lead wire))
Electromagnetic compatibility:
According to EN 61326-1

Technical data

Symbol	Port size	Switching pressure range (bar)	(psi)	Over pressure *1) (bar)	(psi)	Output signal	Model
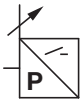	G1/8	-1 ... 10	-14,5 ... 145	15	217	2 x PNP	0860810
	G1/8	-1 ... 10	-14,5 ... 145	15	217	2 x NPN	0860815
	G1/8	- 1 ... 1	-14,5 ... 14,5	3	43	2 x PNP	0860820
	G1/8	- 1 ... 1	-14,5 ... 14,5	3	43	2 x NPN	0860825

*1) Short-term pressure peaks are not allowed to exceed this limit value during operation. Operative utilization of the limit value is not permitted.
The limit value corresponds to the maximum testing pressure.

Accessories

Mounting bracket (wall mounting)	Mounting bracket (bottom mounting)	Panel mounting kit	Mounting (DIN rail clip)	ISO G - Expanding connector G1/8 ... G1/4
				
Page 3	Page 3	Page 3	Page 4	Page 4
0860000	0860001	0860002 + 0860003	0860007	160231828

Electrical connection M12 x 1

PIN-No.	Signal	Cable
1	+ UB	brown
2	Out 2	white
3	-	blue
4	Out 1	black

PNP

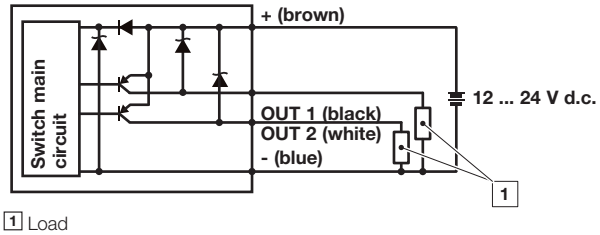

1 Load

NPN

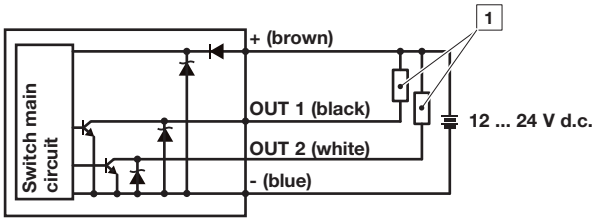

1 Load

Drawing - Pressure switch

Dimensions in mm
Projection/First angle

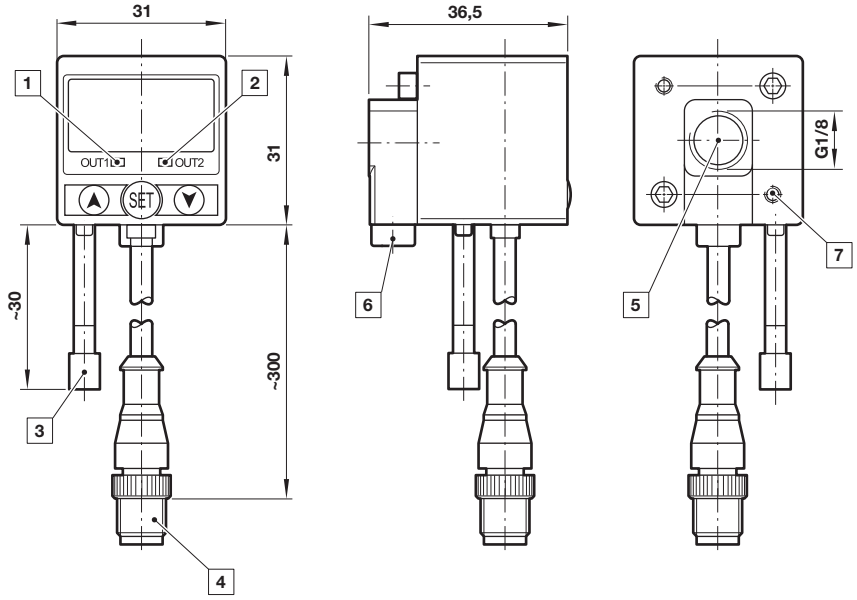

1 Switch OUT 1, green LED
2 Switch OUT 2, red LED
3 Dustproof protector
4 Connector M12 x 1
5 Inlet port
6 Alternative inlet port G1/8 plugged
7 Thread for mounting screw

Dimensions in mm
Projection/First angle

Drawing - Mounting bracket (wall mounting)

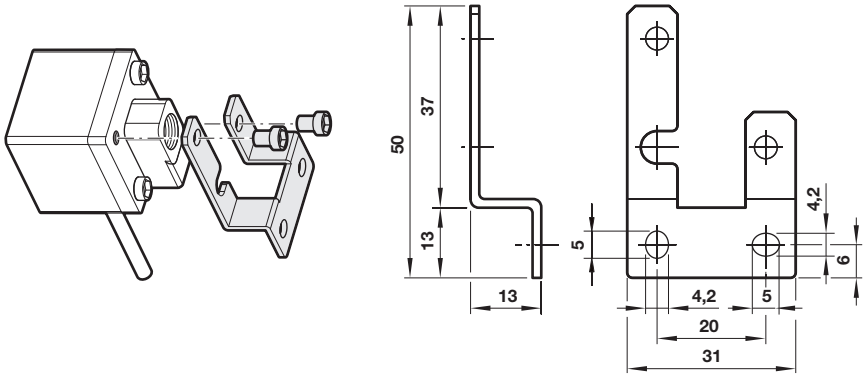

Drawing - Mounting bracket (bottom mounting)

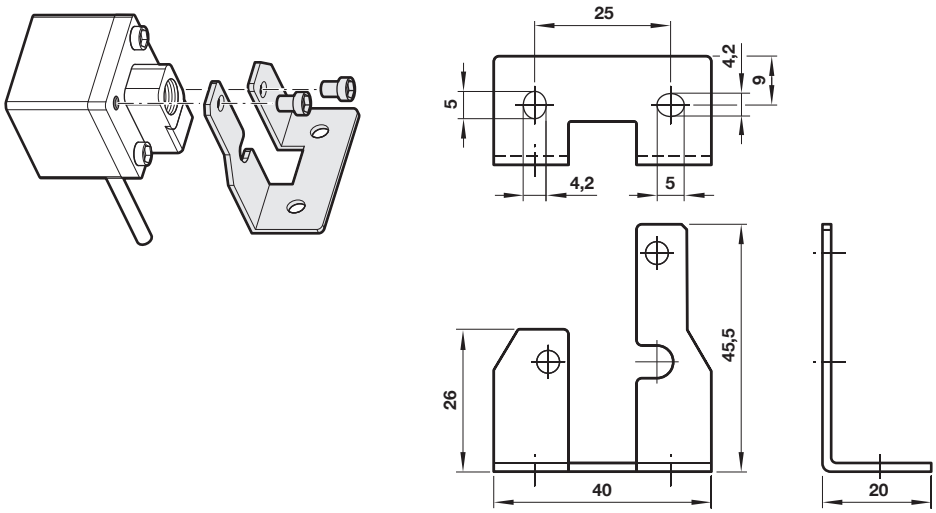

Drawing - Panel mounting kit

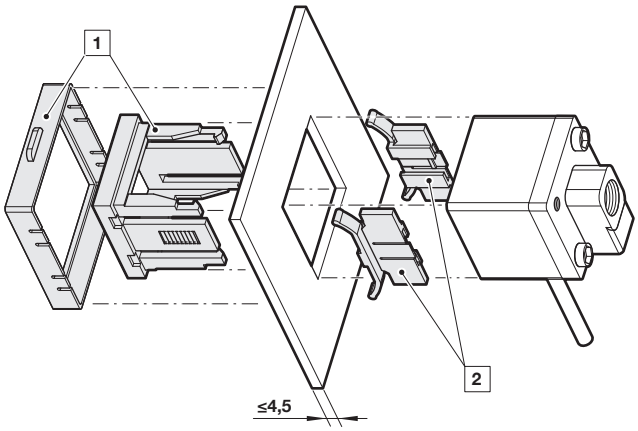

1 Front protection lid + Panel adaptor (0860003)
2 Safety adaptors (0860002)

Drawing - Front protective lid

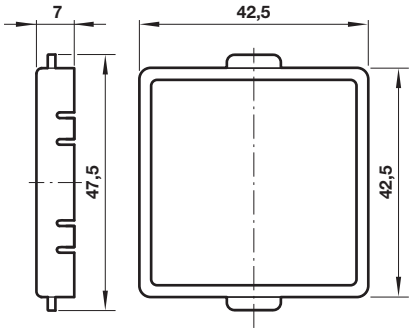

Drawing - Panel adapter

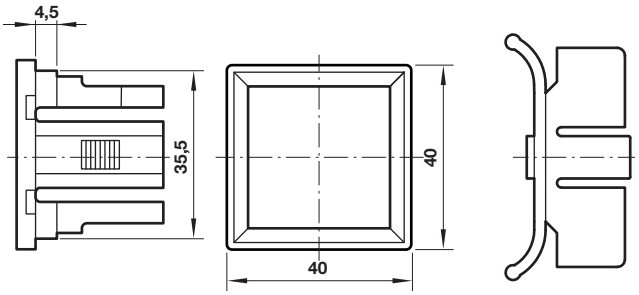

Drawing - Mounting (DIN rail clip)

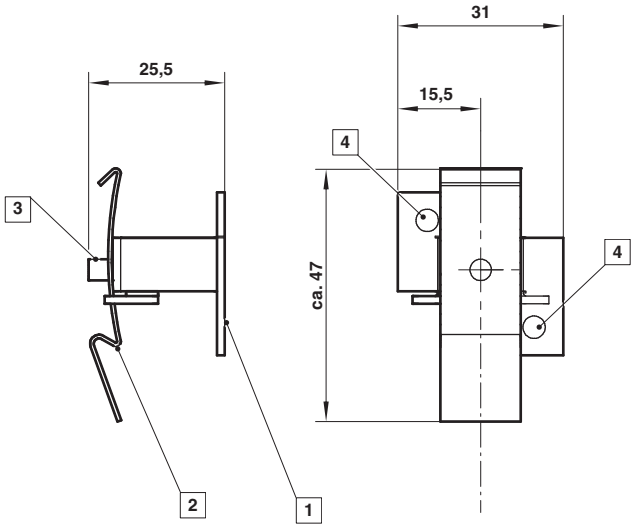

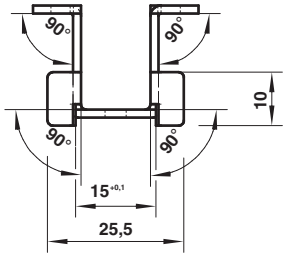

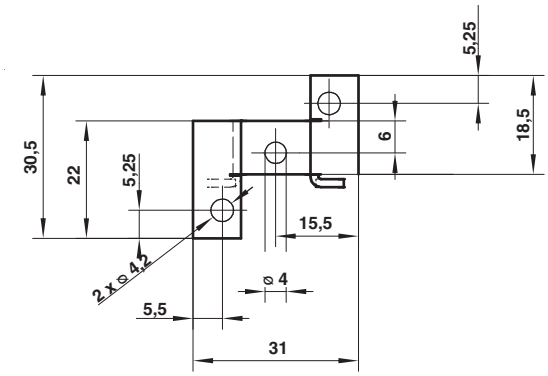

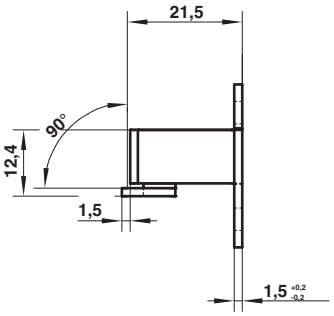

Drawing - Expanding connector

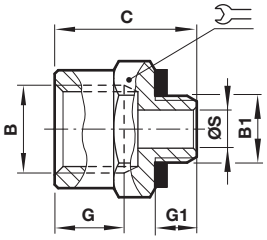

B	B1	C	G	G1	Ø S		Model
G1/4	G1/8	20,5	12	6	5,5	17	160231828

1 Mounting angel
2 DIN-Mounting bracket
3 Fastening screw
4 Fastening screw (pressure switch)

Warning

These products are intended for use in industrial compressed air systems only. Do not use these products where pressures and temperatures can exceed those listed under »**Technical features/data**«.
Before using these products with fluids other than those specified, for non-industrial applications, life-support systems or other applications not within published specifications, consult
IMI Precision Engineering, Norgren GmbH.

Through misuse, age, or malfunction, components used in fluid power systems can fail in various modes. The system designer is warned to consider the failure modes of all component parts used in fluid power systems and to provide adequate safeguards to prevent personal injury or damage to equipment in the event of such failure.
System designers must provide a warning to end users in the system instructional manual if protection against a failure mode cannot be adequately provided.
System designers and end users are cautioned to review specific warnings found in instruction sheets packed and shipped with these products.