Integrated Fittings/Threaded Ports/Manual Operation (Integrated Fittings/Threaded Ports)

High Purity Chemical Liquid Valve

Clean Wet Series

Air Operated Integrated Fitting Type *LVC Series*

▶P.7

- N.C./N.O./Double acting with same configuration
- Compatible with 100 °C fluid temperature

Body material: New PFA

Air Operated Threaded Type *LVA Series*

▶P.19

- Diaphragm material PTFE, EPDM, NBR are selectable

Body material: New PFA/Stainless steel/PPS

Manually Operated *LVH Series* Integrated Fitting Type/Threaded Type

▶P.38

- Locking and non-locking types available

Body material: New PFA/Stainless steel/PPS

Organic Solvents Compatible

New Air Operated *LVA Series*

▶P.34

Body: **Stainless steel**
Actuator section: **ADC**
Buffer: Choose from **FKM/EPDM**

New Manually Operated *LVH Series*

▶P.49

Body: **Stainless steel**
Actuator section: **ADC**
Buffer: Choose from **FKM/EPDM**

LVC/LVA/LVH Series

SMC

CAT.EUS70-16D-UK

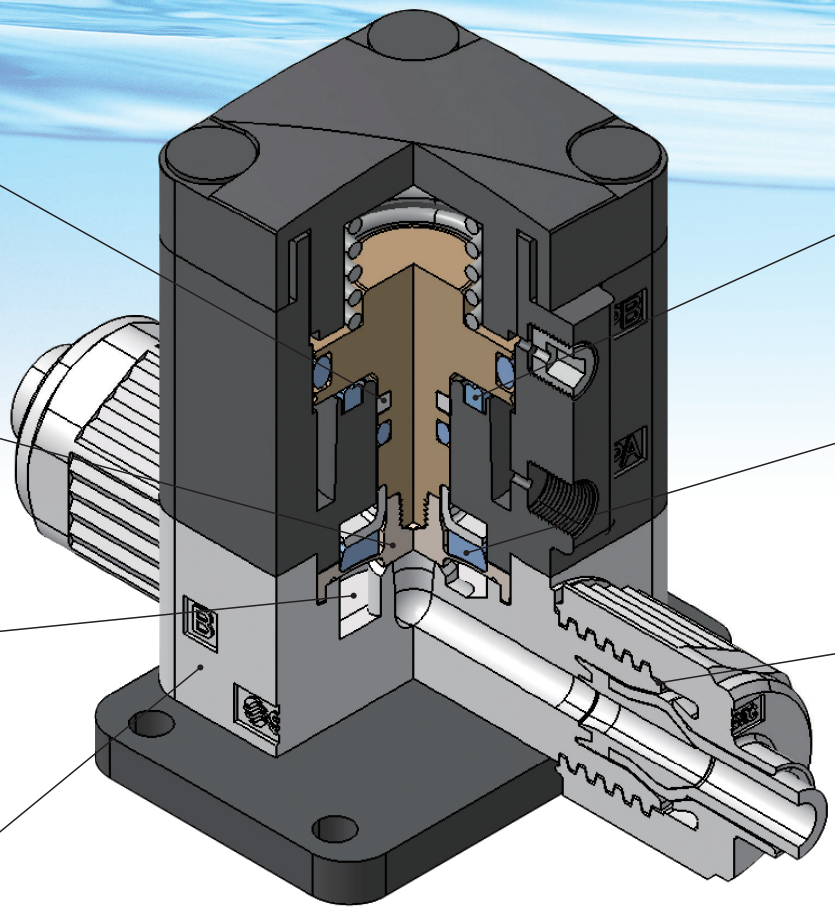

Stable sealing surface Guide ring

A unique guide ring on the piston rod eliminates lateral motion of the poppet, greatly increasing seal life and reducing particle generation with a stable work surface.

Prevents micro-bubbles
Diaphragm (PTFE)

Special diaphragm construction ensures gentle opening and closing that prevents the generation of micro-bubbles.

Minimal dead space

In addition to a body designed for smooth flow with minimal internal dead space, integrated fittings eliminate the possibility of residual liquid in pipe threads.

Outstanding corrosion resistance
(New PFA)

Compatible with chemicals such as acids, bases and ultrapure water.

Organic Solvents Compatible RoHS

Air Operated ***LVA-$^{D}_{G}$-$^{AD}_{ND}$ Series*** ▶P.34

Manually Operated ***LVH□M-$^{D}_{G}$-$^{AD}_{ND}$ Series*** ▶P.49

- Body: **Stainless steel**, Actuator section: **ADC**, Buffer: **FKM/EPDM** (Select one)
- Fitting type: Double ferrule fittings, Metal gasket seal fittings, Integrated tubing
- Options: With flow rate adjustment, With indicator, High back pressure (0.5 MPa), Body wetted parts equivalent to EP grade
- Japan's Export Trade Control Order: Not applicable for list control

Main Applications and Fields

LVC

- IC manufacturing
- Chemicals
- Analytical instruments
- Medical equipment
- Pharmaceutical manufacturing
- Cleaning equipment

LVA

- Medical
- Chemicals
- Analytical instruments
- Food processing
- IC manufacturing
- Cleaning equipment

LVH

- For shut off
- For air bleeding

Low particle generation Piston bumper

A bumper absorbs piston momentum to minimize impact-induced particles.

Back-pressure resistance and long life Buffer

The diaphragm is supported by a buffer that minimises deformation, which gives it long life and resistance to back pressure.

Different tubing sizes can be selected Hyper fitting

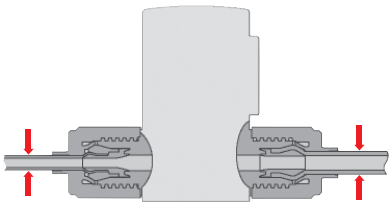

- No leak design (quadruple seal)
- Nut lock mechanism (sealing)
- High flexural strength (tubing supports)

LVA30-D11-AD
Double ferrule fittings

LVA50-G19-AD
Metal gasket seal fittings

LVA60-T25-AD
Integrated tubing

LVH20M-D07-AD
Double ferrule fittings

Air Operated Series Variations

Integrated Fitting Type *LVC Series* ▶P.7

Type	Symbol	Valve type / Model	LVC2□	LVC3□	LVC4□	LVC5□	LVC6□
		Orifice diameter	Ø 4	Ø 8	Ø 10	Ø 16	Ø 22
		Tubing O.D. Metric	3, 4, 6	6, 8, 10	10, 12	12, 19	19, 25
		Tubing O.D. Inch	1/8, 3/16, 1/4	1/4, 3/8	3/8, 1/2	1/2, 3/4	3/4, 1
Basic	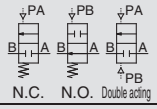 N.C. N.O. Double acting	N.C.	●	●	●	●	●
		N.O.	●	●	●	●	●
		Double acting	●	●	●	●	●
With flow rate adjustment	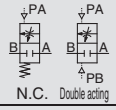 N.C. Double acting	N.C.	●	●	●	●	●
		Double acting	●	●	●	●	●
With bypass	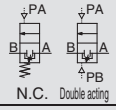 N.C. Double acting	N.C.	—	●	●	●	—
		Double acting	—	●	●	●	—
With flow rate adjustment & bypass	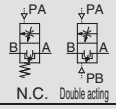 N.C. Double acting	N.C.	—	●	●	●	—
		Double acting	—	●	●	●	—
With indicator	N.C.	N.C.	●	●	●	●	●
Suck back 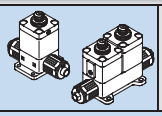	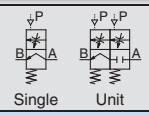 Single Unit	Single	●	—	—	—	—
		Unit	●	—	—	—	—
Manifold (Up to 5 stations) 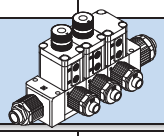							
3 port 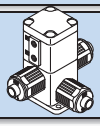	N.C.	N.C.	●	—	—	—	—

Air Operated Series Variations

Threaded Type *LVA Series* ▶P.19

Type	Symbol	Model	LVA1□		LVA2□		LVA3□		LVA4□		LVA5□		LVA6□
		Orifice diameter	Ø 2		Ø 4		Ø 8		Ø 12		Ø 20		Ø 22
		Port size	1/8	1/4	1/8	1/4	1/4	3/8	3/8	1/2	1/2	3/4	1
		Body material*1: Stainless steel 316	●	●	●	●	●	●	●	●	●	●	●
		Body material*1: PPS	●	●	—	●	—	●	—	●	—	●	—
		Body material*1: PFA	●	—	—	●	—	●	—	●	—	●	●
Basic	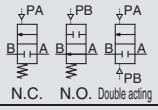 N.C. N.O. Double acting	N.C.	●	●	●	●	●	●	●	●	●	●	●
		N.O.	—	—	●	●	●	●	●	●	●	●	●
		Double acting	●	●	●	●	●	●	●	●	●	●	●
With flow rate adjustment	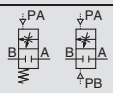 N.C. Double acting	N.C.	—	—	●	●	●	●	●	●	●	●	●
		Double acting	—	—	●	●	●	●	●	●	●	●	●
With bypass	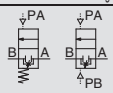 N.C. Double acting	N.C.	—	—	—	—	—	●	—	●	—	●	—
		Double acting	—	—	—	—	—	●	—	●	—	●	—
With flow rate adjustment & bypass	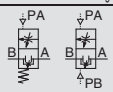 N.C. Double acting	N.C.	—	—	—	—	—	●	—	●	—	●	—
		Double acting	—	—	—	—	—	●	—	●	—	●	—
With indicator	N.C.	N.C.	—	—	●	●	●	●	●	●	●	●	●
Manifold (Up to 5 stations)	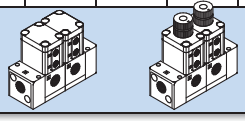												

*1: Refer to page 19 for the applicable optional body materials.

3 port 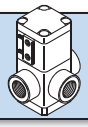	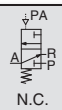 N.C.	N.C.	—	—	—	●*2	—	—	—	—	—	—	—

*2: Only PFA is applicable as a body material.

Organic Solvents Compatible Double Ferrule Fittings/Metal Gasket Seal Fittings/Integrated Tubing

LVA Series ▶P.34

Type	Symbol	Model	LVA2□	LVA3□	LVA4□	LVA5□	LVA6□
		Orifice diameter	Ø 4	Ø 8	Ø 12	Ø 20	Ø 22
		Tubing O.D. Metric	6	10	12	19	—
		Tubing O.D. Inch	1/4	3/8	1/2	3/4	1
Basic	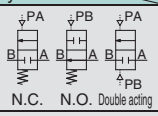 N.C. N.O. Double acting	N.C.	●	●	●	●	●
		N.O.	●	●	●	●	●
		Double acting	●	●	●	●	●
With flow rate adjustment 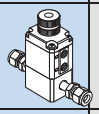	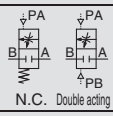 N.C. Double acting	N.C.	●	●	●	●	●
		Double acting	●	●	●	●	●
With indicator	N.C.	N.C.	●	●	●	●	●
High back pressure 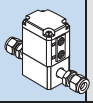	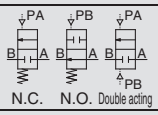 N.C. N.O. Double acting	N.C.	●	●	●	●	●
		N.O.	●	●	●	●	●
		Double acting	●	●	●	●	●
High back pressure with flow rate adjustment 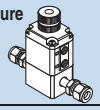	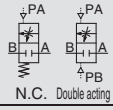 N.C. Double acting	N.C.	●	●	●	●	●
		Double acting	●	●	●	●	●
High back pressure with indicator 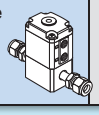	N.C.	N.C.	●	●	●	●	●

Manually Operated Series Variations

LVH Series ▶P.38

Integrated Fitting Type

Type / Symbol / Valve type	Model	LVH20	LVH30	LVH40
	Orifice diameter	Ø 4	Ø 8	Ø 10
	Tubing O.D. Metric	3, 4, 6	6, 8, 10	10, 12
	Tubing O.D. Inch	1/8, 3/16, 1/4	1/4, 3/8	3/8, 1/2
Basic 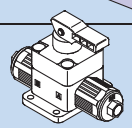	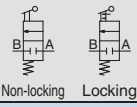 Non-locking Locking N.C.	●	●	●
Manifold (Up to 5 stations)	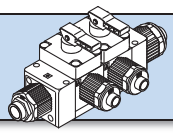			

Threaded Type

Type / Symbol / Valve type	Model	LVH20				LVH30				LVH40			
	Orifice diameter	Ø 4				Ø 8				Ø 12			
	Material	Stainless steel 316		PPS	PFA	Stainless steel 316		PPS	PFA	Stainless steel 316		PPS	PFA
	Port size	1/8	1/4	1/4	1/4	1/4	3/8	3/8	3/8	3/8	1/2	1/2	1/2
Basic 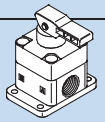	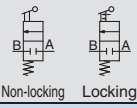 Non-locking Locking N.C.	●	●	●	●	●	●	●	●	●	●	●	●
Manifold (Up to 5 stations)	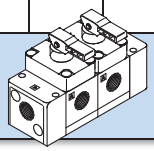												

Organic Solvents Compatible Double Ferrule Fittings/Metal Gasket Seal Fittings/Integrated Tubing

LVH□M Series ▶P.49

Type / Symbol	Model	LVH20M	LVH30M	LVH40M	LVH50M	LVH60M
	Orifice diameter	Ø 4	Ø 8	Ø 12	Ø 20	Ø 22
	Tubing O.D. Metric	6	10	12	19	—
	Tubing O.D. Inch	1/4	3/8	1/2	3/4	1
Basic 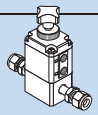		●	●	●	●	●

CONTENTS

Integrated Fittings/Threaded Ports/Manual Operation (Integrated Fittings/Threaded Ports)

High Purity Chemical Liquid Valve *LVC/LVA/LVH Series*

<Series Variations>

■ Air Operated

Insert Bushing Integrated Fitting Type ***LVC Series*** P.3

Threaded Type ***LVA Series*** P.4

Organic Solvents Compatible
Double Ferrule Fittings/Metal Gasket Seal Fittings/Integrated Tubing
LVA Series P.4

■ Manually Operated

Integrated Fitting Type/Threaded Type ***LVH Series*** P.5

Organic Solvents Compatible
Double Ferrule Fittings/Metal Gasket Seal Fittings/Integrated Tubing
LVH□M Series P.5

Air Operated
Insert Bushing Integrated Fitting Type ***LVC Series*** **P.7**

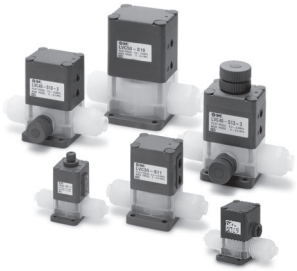

How to Order Valve (Single Type) P.7
Standard Specifications P.8
Suck Back P.9
Construction P.10
Dimensions P.11

Manifolds P.14
3 Port P.17

Air Operated
Threaded Type ***LVA Series*** **P.19**

How to Order Valve (Single Type) P.19
Standard Specifications P.20
Construction P.21
Dimensions P.22

Manifolds P.29
3 Port P.32

Air Operated
Organic Solvents Compatible
Double Ferrule Fittings/Metal Gasket Seal Fittings/Integrated Tubing
LVA Series **P.34**

How to Order Valve P.34
Standard Specifications P.34
Dimensions P.35

Manually Operated
Integrated Fitting Type/Threaded Type ***LVH Series*** **P.38**

How to Order Valve (Single Type) P.38
Standard Specifications P.38
Construction P.40
Dimensions P.40

Manifolds (Integrated Fitting Type) P.43
Manifolds (Threaded Type) P.46

Manually Operated
Organic Solvents Compatible
Double Ferrule Fittings/Metal Gasket Seal Fittings/Integrated Tubing
LVH□M Series **P.49**

How to Order Valve P.49
Standard Specifications P.49
Dimensions P.50

Fittings and Special Tools P.53
Applicable Fluids P.54
High Purity Chemical Liquid Valve Precautions P.55

Air Operated
Insert Bushing Integrated Fitting Type
LVC Series

How to Order Valve (Single Type)

For N.C.

Body class: 2

LVC 2 0 – S 06 □ □ – □ □ – □ – Z

For N.O./Double acting

Body class: 2

LVC 2 1 – S 06 □ □ – □ □ – □

Body class: 3, 4, 5, 6

LVC 3 0 – S 10 □ □ – □ □ – V

Pilot port thread type

Symbol	Thread type
—	Rc
N	NPT
F	G

Valve type

0	N.C.

Pilot port thread size 1/8

Body class

Symbol	Body class	Orifice dia.
2	2	Ø 4

Valve type

1	N.O.
2	Double acting

Body class

Symbol	Body class	Orifice dia.
3	3	Ø 8
4	4	Ø 10
5	5	Ø 16
6	6	Ø 22

Valve type

0	N.C.
1	N.O.
2	Double acting

∗: Refer to Variations for valve type combinations.

LQ2 integrated fitting

Applicable tubing size∗1∗2

Symbol	Connecting tubing size	Body class 2	3	4	5	6
Metric size						
03	3 x 2	●				
04	4 x 3	●				
06	6 x 4	○	●			
08	8 x 6		●			
10	10 x 8		○	●		
12	12 x 10			○	●	
19	19 x 16				○	●
25	25 x 22					○
Inch size						
03	1/8" x 0.086"	●				
05	3/16" x 1/8"	●				
07	1/4" x 5/32"	○	●			
11	3/8" x 1/4"		○	●		
13	1/2" x 3/8"			○	●	
19	3/4" x 5/8"				○	●
25	1" x 7/8"					○

○Basic size ●With reducer

∗1: Applicable fitting for body class 6 is LQ1.
∗2: Refer to page 56 for details of the applicable tubing sizes.

Port B (OUT) different dia. size

Symbol	Application
—	Ports A & B same size
Refer to the applicable tubing table on the left.	Different diameter tubing can be selected within the same body class.

Pilot port thread type

Symbol	Body class	Thread type
—	2	M5
	3, 4, 5, 6	Rc1/8
N	3, 4, 5, 6	NPT1/8
F	3, 4, 5, 6	G1/8

Option

—	None
1	With flow rate adjustment
2	With bypass
3	With flow rate adjustment & bypass
4	With indicator

∗: Refer to Variations for option combinations. Options cannot be combined.

Specifications

—	None
V	Vacuum specification

∗: Applicable to only material symbol —.

Material

Symbol	Body	Actuator section / End plate	Diaphragm	Applicable option 1	2	3	4	Note
—	PFA	PPS	PTFE	●	●	●	●	—
F	PFA	PVDF	PTFE	—	—	—	—	Hydrofluoric acid compatible (Only LVC40, 50 type)
N	PFA	PPS	PTFE	●	●	●	●	Ammonium hydroxide compatible

Variations

Type	Symbol	Model	LVC20	LVC30	LVC40	LVC50	LVC60
		Orifice diameter	Ø 4	Ø 8	Ø 10	Ø 16	Ø 22
		Tubing O.D. Metric	3, 4, 6	6, 8, 10	10, 12	12, 19	19, 25
		Tubing O.D. Inch	1/8, 3/16, 1/4	1/4, 3/8	3/8, 1/2	1/2, 3/4	3/4, 1
Basic 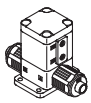	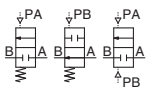 N.C. N.O. Double acting	N.C.	○	○	○	○	○
		N.O.	○	○	○	○	○
		Double acting	○	○	○	○	○
With flow rate adjustment	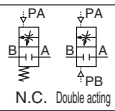 N.C. Double acting	N.C.	○	○	○	○	○
		Double acting	○	○	○	○	○
With bypass 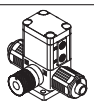	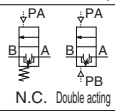 N.C. Double acting	N.C.	—	○	○	○	—
		Double acting	—	○	○	○	—
With flow rate adjustment & bypass 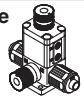	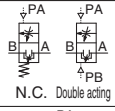 N.C. Double acting	N.C.	—	○	○	○	—
		Double acting	—	○	○	○	—
With indicator 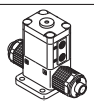	N.C.	N.C.	○	○	○	○	○

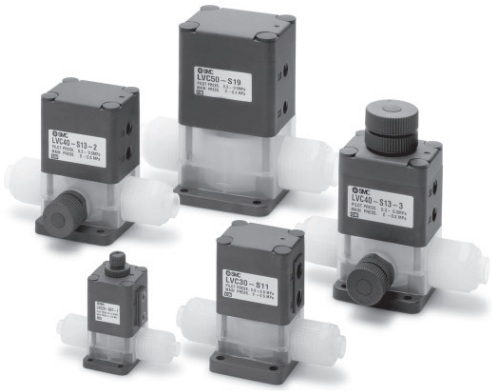

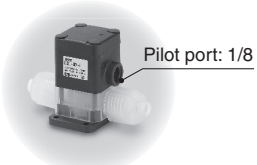

LVC20-Z

Standard Specifications

Model		LVC20	LVC30	LVC40	LVC50	LVC60
Tubing O.D.*1	Metric size	6	10	12	19	25
	Inch size	1/4	3/8	1/2	3/4	1
Orifice diameter		Ø 4	Ø 8	Ø 10	Ø 16	Ø 22
Flow rate characteristics	Kv	0.3	1.4	2.1	5.1	6.8
	Cv	0.35	1.7	2.5	6	8
Withstand pressure [MPa]		1				
Operating pressure [MPa]	A → B	(–94 kPa)*2 0 to 0.5			(–94 kPa)*2 0 to 0.4	
	B → A	(–94 kPa)*2 0 to 0.2			(–94 kPa)*2 0 to 0.1	
Back pressure [MPa]	N.C./N.O.	0.3 or less			0.2 or less	
	Double acting	0.4 or less			0.3 or less	
Valve leakage [cm³/min]		0 (with water pressure)				
Pilot air pressure [MPa]		0.3 to 0.5				
Pilot port size	Standard	M5*3	Rc1/8, NPT1/8, G1/8			
	-Z type*4	Rc1/8, NPT1/8, G1/8	—			
Fluid temperature [°C]		0 to 100				
Ambient temperature [°C]		0 to 60				
Weight [kg]		0.09	0.23	0.42	0.86	1.00

*1: Refer to page 56 for details of the applicable tubing sizes.
*2: When using for vacuum, select the product number ending in "-V". This product cannot be used for vacuum retention. Also, connecting the vacuum to the B port may reduce the life of the product.
*3: Applicable for the LVC21 (N.O.) and LVC22 (double acting) types
*4: Applicable for the LVC20 (N.C.)-Z type
*: Please contact SMC if the manifold will be used with vacuum and B → A flow.

Different Diameter Tubing Applicable with Reducer

Different diameter tubing can be selected (within a body class) by using a nut and insert bushing (reducer).

● With reducer

Body class	Tubing O.D.														
	Metric size								Inch size						
	3	4	6	8	10	12	19	25	1/8	3/16	1/4	3/8	1/2	3/4	1
2	●	●	○	—	—	—	—	—	●	●	○	—	—	—	—
3	—	—	●	●	○	—	—	—	—	—	●	○	—	—	—
4	—	—	—	—	●	○	—	—	—	—	—	●	○	—	—
5	—	—	—	—	—	●	○	—	—	—	—	—	●	○	—
6	—	—	—	—	—	—	●	○	—	—	—	—	—	●	○

*: Refer to page 53 for information on changing tubing sizes.

⚠ Precautions

Be sure to read this before handling the products. Refer to the back cover for Safety Instructions, and pages 55 and 56 for High Purity Chemical Liquid Valve Precautions.

Piping

⚠ Caution

1. Connect tubing with special tools.
Refer to the catalog "High-Purity Fluoropolymer Fittings Hyper Fittings/LQ1, 2 Series Work Procedure Instructions" (M-E05-1) for connecting tubing and special tools. (Downloadable from the SMC website.)

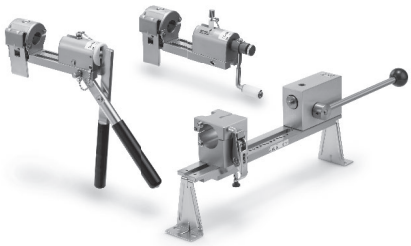

⚠ Caution

2. Tighten the nut until it touches the end surface of the body, and then tighten it an additional 1/8 turn. If the nut won't turn any further, then it means a sufficient tightening has occurred. Refer to the proper tightening torques shown below.

Tightening Torque for Piping

Body class	Torque [N·m]
2	1.5 to 2.0
3	3.0 to 3.5
4	7.5 to 9.0
5	11.0 to 13.0
6	5.5 to 6.0

Suck Back

A change of volume inside the suck back valve pulls in liquid at the end of the nozzle to prevent dripping.

Single type

Symbol

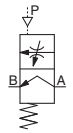

Unit type

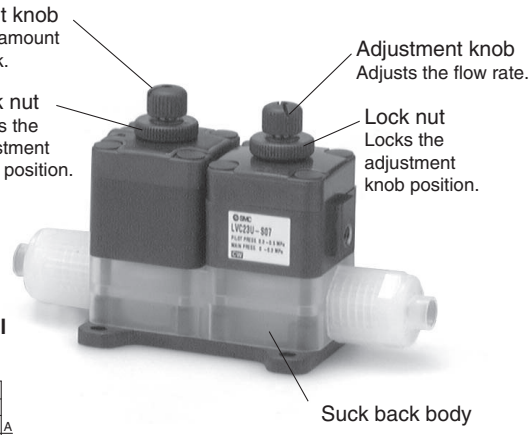

Symbol

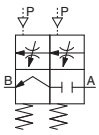

Standard Specifications

Model		LVC23	LVC23U
Tubing O.D. *1 *2	Metric size	(3), (4), 6	
	Inch size	(1/8), (3/16), 1/4	
Orifice diameter		—	Ø 3
Flow rate characteristics	Kv	—	0.1
	Cv	—	0.2
Withstand pressure [MPa]		1	
Operating pressure [MPa]		0 to 0.2	
Maximum suck back volume [cm³]		0.1	
Pilot air pressure [MPa]		0.3 to 0.5	
Pilot port size		M5	
Fluid temperature [°C]		0 to 100	
Ambient temperature [°C]		0 to 60	
Weight [kg]		0.08	0.16

*1: Different diameter tubing shown in ( ) can be selected when used with a reducer. Refer to page 53 for details.
*2: Refer to page 56 for details of the applicable tubing sizes.

How to Order

LVC 2 3 □ −S 06 □

Body class

Symbol	Body class
2	2

Valve type

3	Suck back

Body type

—	Single
U	Unit type with 2 way valve

LQ2 integrated fitting

Port B (OUT) different dia. size

Symbol	Application
—	Ports A & B same size
Refer to the applicable tubing table below.	Different diameter tubing can be selected within the same body class.

Applicable tubing size

Symbol	Connecting tubing size	Body class 2
Metric size		
03	3 x 2	○
04	4 x 3	○
06	6 x 4	◎
Inch size		
03	1/8" x 0.086"	○
05	3/16" x 1/8"	○
07	1/4" x 5/32"	◎

◎ Basic size ○ With reducer

Options

■ With flow rate adjustment

The flow rate is adjusted by controlling the diaphragm stroke.

■ With bypass

A small amount of fluid from the inlet side is allowed to flow continuously to the outlet side by providing a bypass inside the body.

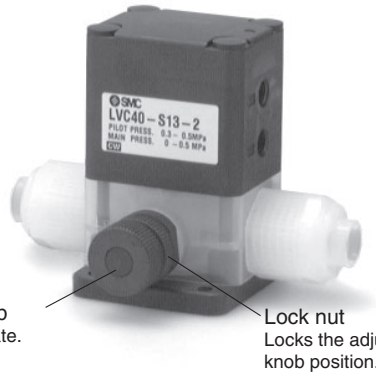

Construction

Standard type
N.C. type

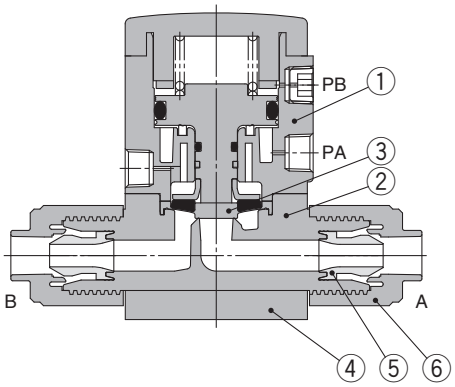

N.O. type

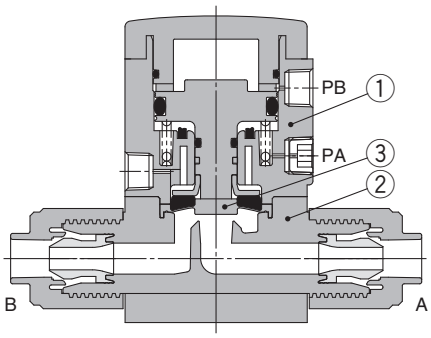

Double acting type

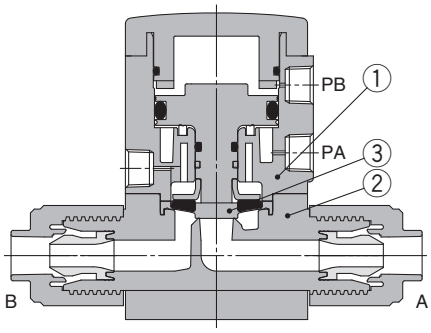

With reducer

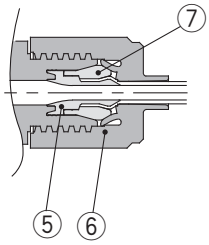

With flow rate adjustment

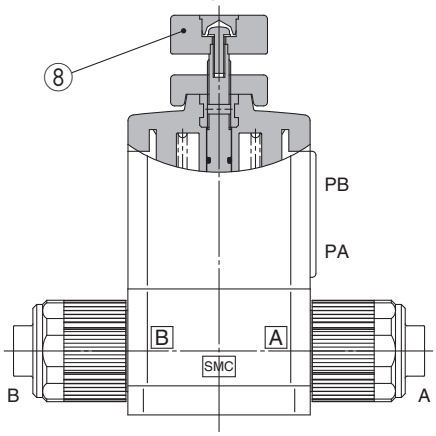

With bypass

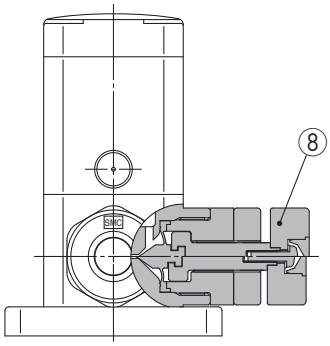

Suck back (Single type)

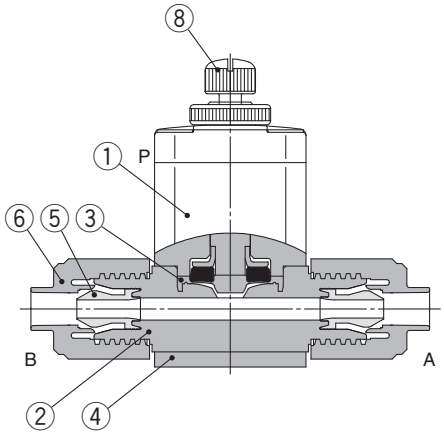

Suck back (Unit type)

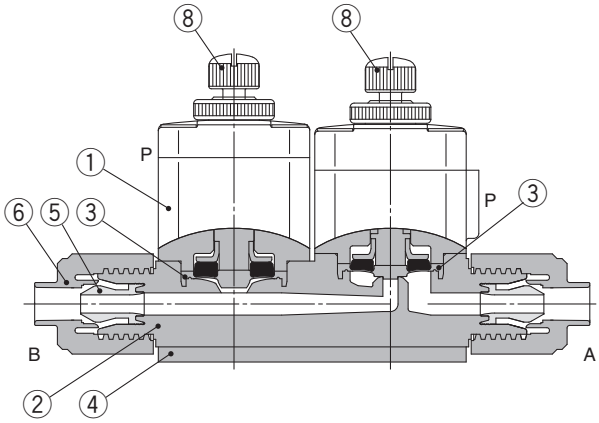

With indicator

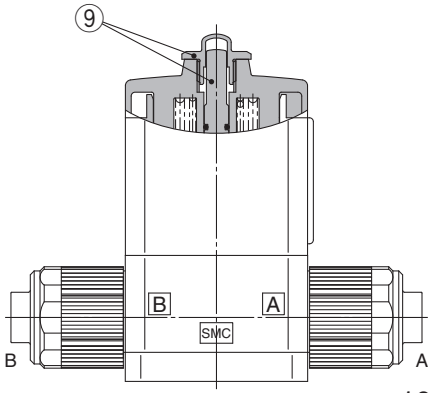

Component Parts

No.	Description	Material	Option
1	**Actuator section**	PPS	PVDF
2	**Body**	PFA	—
3	**Diaphragm**	PTFE	—
4	**End plate**	PPS	PVDF
5	**Insert bushing**	PFA	—
6	**Nut**	PFA	—
7	**Collar**	PFA	—
8	**Flow rate adjuster section**	PPS	—
9	**Indicator**	PP	—

Dimensions

LVC20

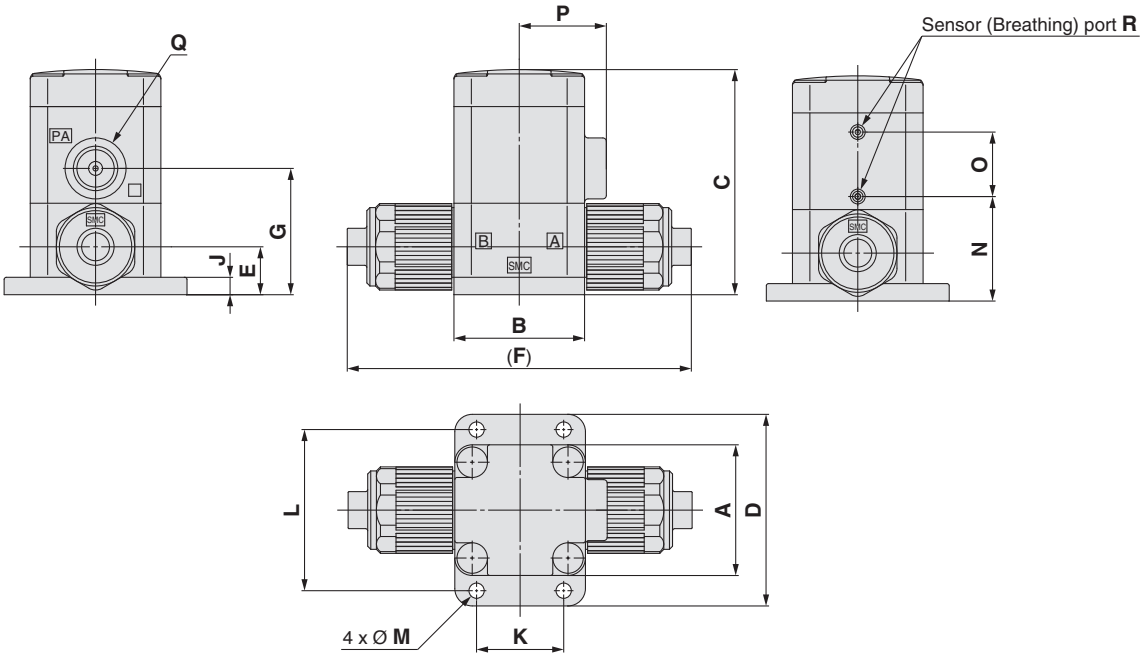

LVC21/22
LVC3□ to 6□

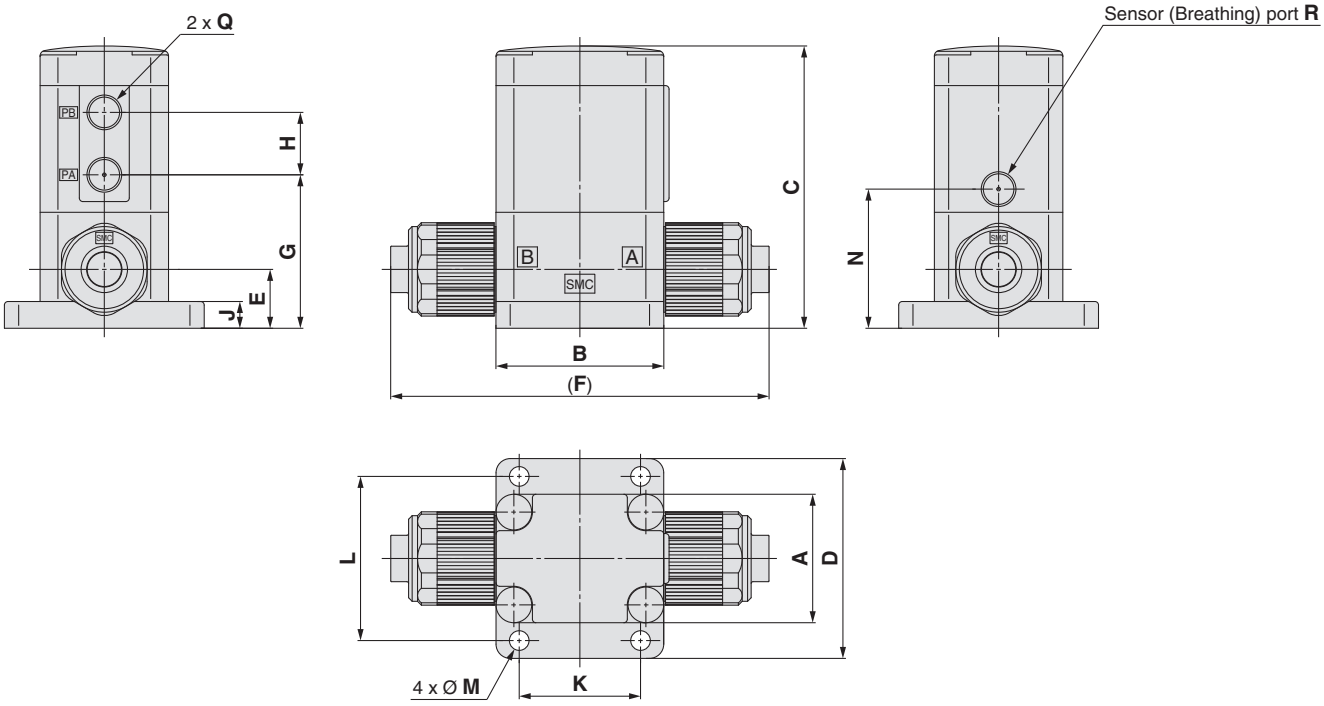

Dimensions [mm]

Model	A	B	C	D	E	F	G	H	J	K	L	M	N	O	P	Q	R
LVC20	30	30	51.7	44	11	79	29	—	4	20	37	3.5	24	14.8	20	Rc1/8 NPT1/8 G1/8	Ø 2.4
LVC2$\frac{1}{2}$	30	30	54.5	44	11	79	28.5	13	4	20	37	3.5	23.5	—	—	M5 x 0.8	M3 x 0.5
LVC3□	36	47	79.1	56	16.5	106	43	17.5	7.5	34	46	5.5	39	—	—	Rc1/8 NPT1/8 G1/8	Rc1/8 NPT1/8 G1/8
LVC4□	46	60	95.9	68	22	131	55	18	8	42	57	5.5	48	—	—		
LVC5□	58	75	129	84	26	154	68	27.5	8	56	71	6.5	62	—	—		
LVC6□	58	75	137.8	84	32	164	76.8	27.5	8	56	71	6.5	70.8	—	—		

Dimensions

With flow rate adjustment

LVC20

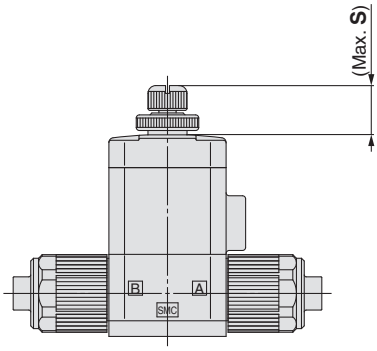

LVC22
LVC3$^{0}_{2}$ to 6$^{0}_{2}$

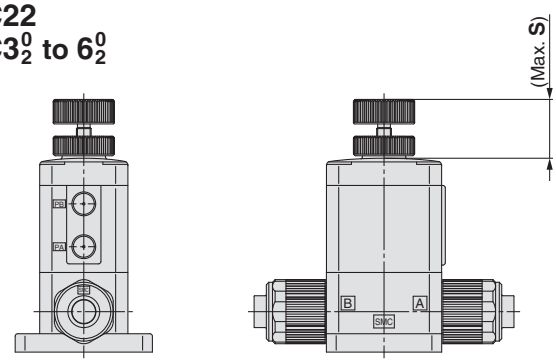

Dimensions [mm]

Model	S
LVC2□	14.5
LVC3□	24.4
LVC4□	29
LVC5□	34.5
LVC6□	36

With indicator

LVC20

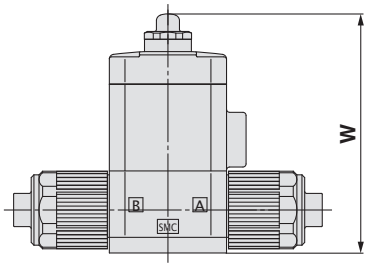

LVC30 to 60

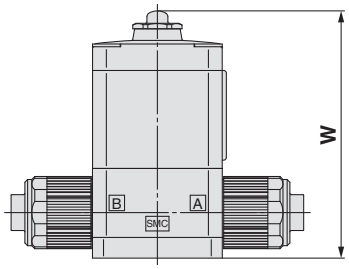

Dimensions [mm]

Model	W
LVC20	61.2
LVC30	89.6
LVC40	110.4
LVC50	147
LVC60	155.8

With bypass

LVC3$^{0}_{2}$ to 5$^{0}_{2}$

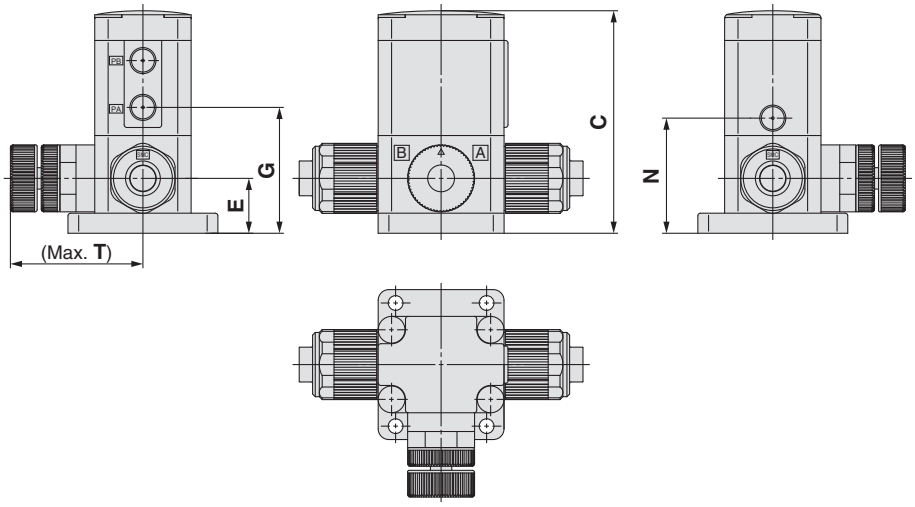

Dimensions [mm]

Model	C	E	G	N	T
LVC3□	83.1	20.5	47	43	50.5
LVC4□	95.9	22	55	48	54.5
LVC5□	129	26	68	62	60

Dimensions

With flow rate adjustment & bypass

LVC3$^{0}_{2}$ to LVC5$^{0}_{2}$

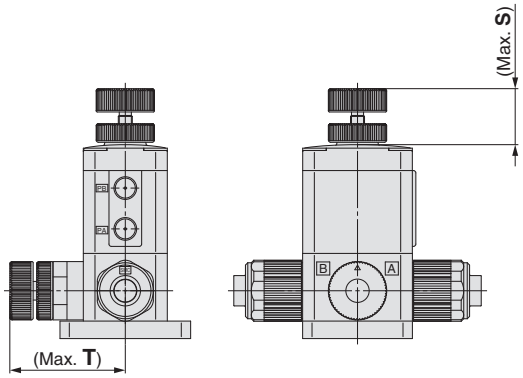

Dimensions [mm]

Model	S	T
LVC3□	24.4	50.5
LVC4□	29	54.5
LVC5□	34.5	60

Suck back (Single type)

LVC23

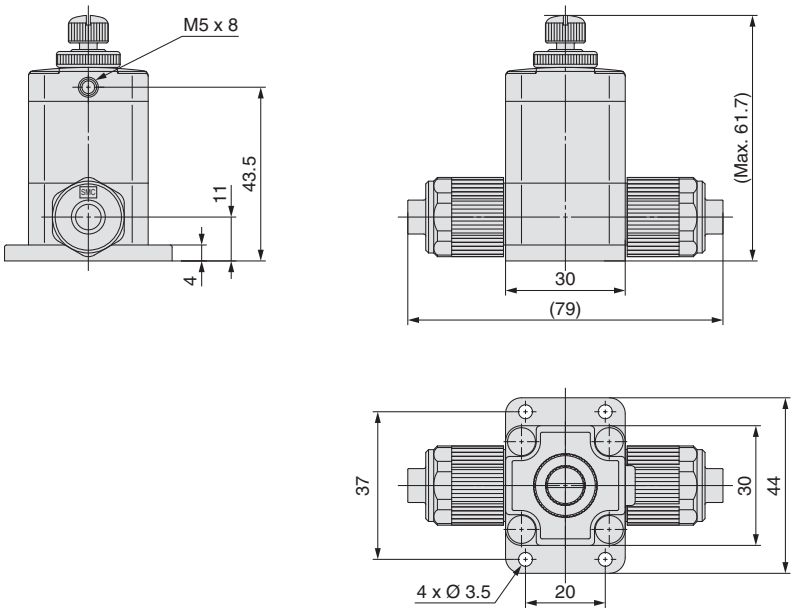

Suck back (Unit type)

LVC23U

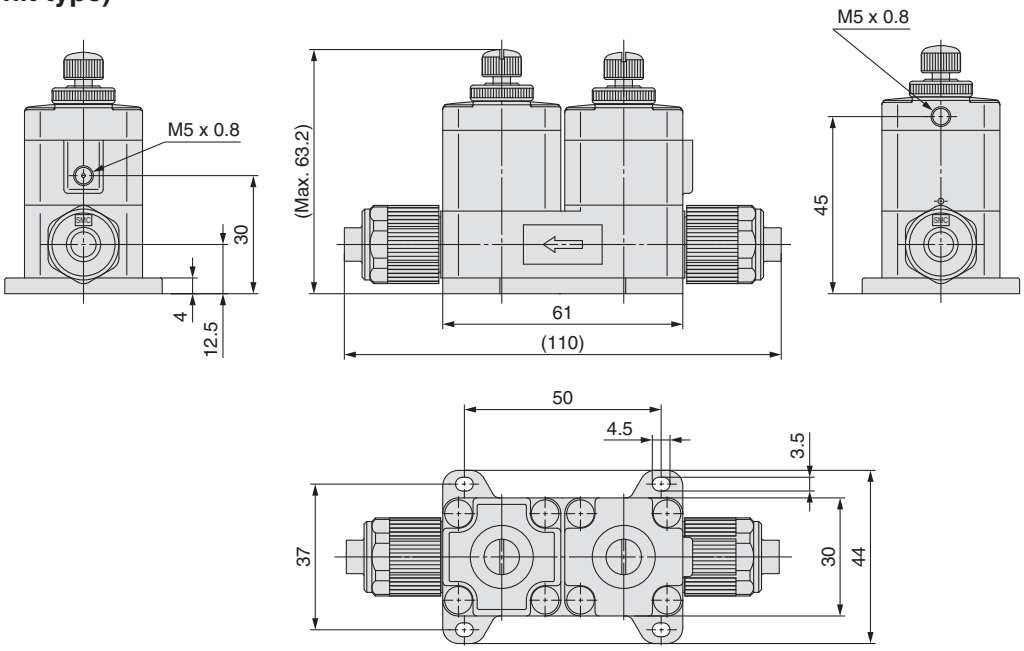

LVC Series
Manifolds

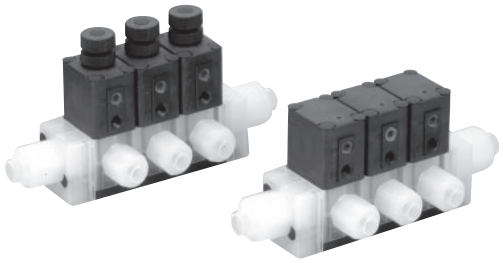

Manifold Specifications

Model	LLC2A	LLC3A	LLC4A	LLC5A
Manifold type	Stacking			
P (IN), A (OUT) type	Common IN/Individual OUT			
Valve stations	2 to 5 stations			
Tubing size *1 **(port P)**	3/8" x 1/4"	1/2" x 3/8"	3/4" x 5/8"	3/4" x 5/8"
Tubing size (port A)	1/4" x 5/32"	3/8" x 1/4"	1/2" x 3/8"	3/4" x 5/8"

*1: Refer to page 56 for details of the applicable tubing sizes.
*: Please contact SMC if the manifold will be used with vacuum and A ⑱ P flow.

How to Order Manifold Base

LLC 2 A – 02 – S 11 ☐

Body class

Symbol	Body class
2	2
3	3
4	4
5	5

Base type

A	Stacking

Manifold stations

02	2 stations
⋮	⋮
05	5 stations

LQ2 integrated fitting

Tubing size for port P and L side connection *1

Symbol	Tubing size	Fittings	Body class
00	Plug	–	2 to 5
06	6 x 4	3	2
07	1/4" x 5/32"		
08	8 x 6		
10	10 x 8		
11	3/8" x 1/4"		
10	10 x 8	4	3
11	3/8" x 1/4"		
12	12 x 10		
13	1/2" x 3/8"		
12	12 x 10	5	4
13	1/2" x 3/8"		
19	19 x 16, 3/4" x 5/8"		
12	12 x 10	5	5
13	1/2" x 3/8"		
19	19 x 16, 3/4" x 5/8"		

*1: Refer to page 56 for details of the applicable tubing sizes.
*: Port P fitting of the manifold base is one size bigger than the body class. (except body class 5) When ordering plug only, refer to Blanking plug (LQ series) in the catalogue on **www.smc.eu** after checking the fitting size.

Tubing size for port P and R side connection *1

Symbol	Tubing size	Fittings	Body class
—	L side, R side same size		
00	Plug	–	2 to 5
06	6 x 4	3	2
07	1/4" x 5/32"		
08	8 x 6		
10	10 x 8		
11	3/8" x 1/4"		
10	10 x 8	4	3
11	3/8" x 1/4"		
12	12 x 10		
13	1/2" x 3/8"		
12	12 x 10	5	4
13	1/2" x 3/8"		
19	19 x 16, 3/4" x 5/8"		
12	12 x 10	5	5
13	1/2" x 3/8"		
19	19 x 16, 3/4" x 5/8"		

*1: Refer to page 56 for details of the applicable tubing sizes.
*: Port P fitting of the manifold base is one size bigger than the body class. (except body class 5) When ordering plug only, refer to Blanking plug (LQ series) in the catalogue on **www.smc.eu** after checking the fitting size.

How to Order Valve

LVC 2 0 A – S 07 ☐ – ☐ ☐

It is not possible to order single unit valves for the manifold. For details, refer to Maintenance 4. in the High Purity Chemical Liquid Valve Precautions 2 on page 56.

Body class

Symbol	Body class	Orifice dia.
2	2	Ø 4
3	3	Ø 8
4	4	Ø 10
5	5	Ø 16

Valve type

0	N.C.
1	N.O.
2	Double acting

Body type

A	Stacking type for manifold

LQ2 integrated fitting

Tubing size *1

Symbol	Tubing size	Fittings	Body class
03	3 x 2, 1/8" x 0.086"	2	2
04	4 x 3		
05	3/16" x 1/8"		
06	6 x 4		
07	1/4" x 5/32"		
06	6 x 4	3	3
07	1/4" x 5/32"		
08	8 x 6		
10	10 x 8		
11	3/8" x 1/4"		
10	10 x 8	4	4
11	3/8" x 1/4"		
12	12 x 10		
13	1/2" x 3/8"		
12	12 x 10	5	5
13	1/2" x 3/8"		
19	19 x 16, 3/4" x 5/8"		

*1: Refer to page 56 for details of the applicable tubing sizes.
*: When ordering plug only, refer to Blanking plug (LQ series) in the in the catalogue on **www.smc.eu** after checking the fitting size.

Option

—	None
1	With flow rate adjustment
4	With indicator

*: Options cannot be combined.

Material

Symbol	Body	Actuator section End plate	Dia-phragm	O-ring	Applicable option 1	Applicable option 4	Note
—	PFA	PPS	PTFE	FKM	●	●	–
F	PFA	PVDF	PTFE	FKM	–	–	Hydrofluoric acid compatible (Only LVC40, 50 type)
N	PFA	PPS	PTFE	EPDM	●	●	Ammonium hydroxide compatible

*: An O-ring is in place for outlet sealing on the outside of the main sealing of the manifold body connection (wetted part). Refer to page 15 for details.

Pilot port thread type

Symbol	Body class	Thread type
—	2	M5
	3/4/5	Rc1/8
N	3/4/5	NPT1/8
F	3/4/5	G1/8

How to Order Manifold Assembly (Example)

Enter the part number of the valves to be mounted together with the manifold base part number.

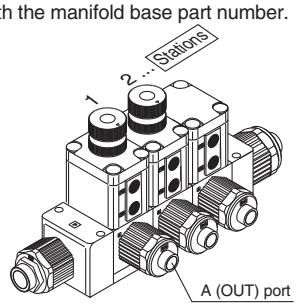

Stations are counted from station 1 on the left side, with the A (OUT) ports in front.

<Example>

LLC2A-03-S11 ····· 1 set Manifold base part no.

∗ LVC20A-S07-1 ····· 2 sets Valve part no. (Stations 1 & 2)

∗ LVC20A-S07 ····· 1 set Valve part no. (Station 3)

• Prefix the asterisk to the part no. of the valves, etc.

Enter together in order counting from station 1 on the left side, with the A (OUT) ports in front.

Manifold Variations

Type / Symbol	Model	LVC20A	LVC30A	LVC40A	LVC50A
	Manifold material	PFA			
	Tubing size	1/4	3/8	1/2	3/4
	Orifice diameter / Valve type	Ø 4	Ø 8	Ø 10	Ø 16
Basic 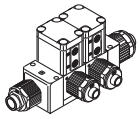 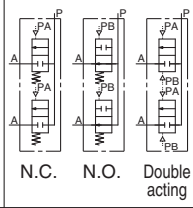 N.C. N.O. Double acting	N.C.	○	○	○	○
	N.O.	○	○	○	○
	Double acting	○	○	○	○
With flow rate adjustment 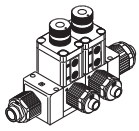 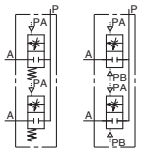 N.C. Double acting	N.C.	○	○	○	○
	Double acting	○	○	○	○

Construction

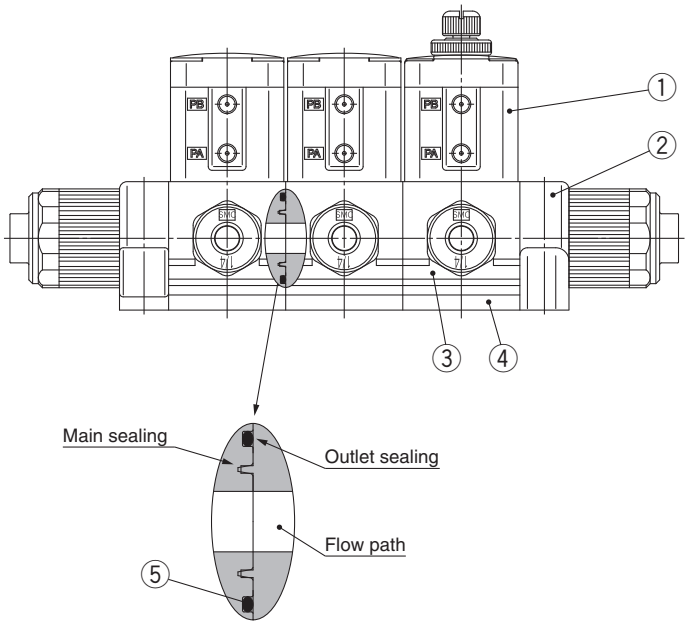

Manifold body connection

Component Parts

No.	Description	Material
1	**Actuator section**	PPS
		PVDF
2	**Manifold**	PFA
3	**Body**	PFA
4	**End plate**	PPS
		PVDF
5	**O-ring**	FKM
		EPDM

Dimensions

LLC□A- Stations -□□-C

Size 2

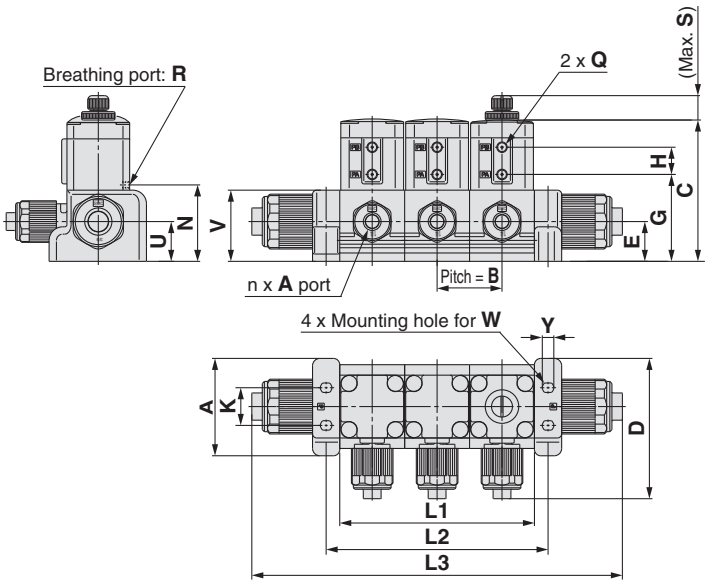

Size 3 to 5

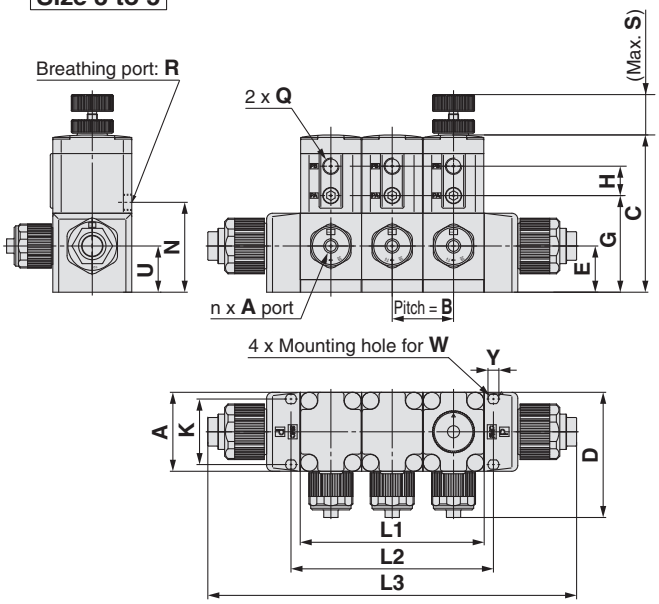

Dimensions [mm]

Model	A	B	C	D	E	G	H	K	N	Q	R	S	U	V	W	Y
LLC2A	46.5	31	67.5	67	19	41.5	13	18	36.5	M5 x 0.8	M3 x 0.5	14.5	19	34	M4	5.5
LLC3A	47	36.5	93.6	76	27.5	57.5	17.5	39	53.5	Rc1/8 NPT1/8 G1/8	Rc1/8 NPT1/8 G1/8	24.4	27.5	47	M5	6.5
LLC4A	60	47	111.4	95	33.5	70.5	18	50	63.5			29	33.5	56	M6	7.5
LLC5A	75	59	131	114	33.5	70	27.5	62	64			34.5	27.5	56.5	M6	7.5

Dimensions [mm]

Model	Station / Symbol	2	3	4	5
LLC2A	**L1**	62	93	124	155
	L2	75	106	137	168
	L3	146	177	208	239
LLC3A	**L1**	73	109.5	146	182.5
	L2	84	120.5	157	193.5
	L3	183	219.5	256	292.5
LLC4A	**L1**	94	141	188	235
	L2	109	156	203	250
	L3	219	266	313	360
LLC5A	**L1**	118	177	236	295
	L2	130	189	248	307
	L3	240	299	358	417

LVC Series
3 Port

Standard Specifications

Model		LVC200
Orifice diameter		Ø 4
Flow rate characteristics	**Kv**	0.2
	Cv	0.3
Withstand pressure [MPa]		1
Operating pressure [MPa]		0 to 0.5
Valve leakage [cm³/min]		0 (with water pressure)
Pilot air pressure [MPa]		0.4 to 0.5
Pilot port size		M5 x 0.8
Fluid temperature [°C]		0 to 100
Ambient temperature [°C]		0 to 60
Weight [kg]		0.120

How to Order Valve

LVC 2 0 0 – S 07

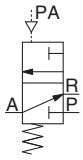

N.C.

Body class

Symbol	Body class	Orifice dia.
2	2	Ø 4

Valve type

0	N.C.

LQ2 integrated fitting

Applicable tubing size

Symbol	Connecting tubing size	Body class 2
Metric size		
03	3 x 2	●
04	4 x 3	●
06	6 x 4	○
Inch size		
03	1/8" x 0.086"	●
05	3/16" x 1/8"	●
07	1/4" x 5/32"	○

○ Basic size ● With reducer

*: Refer to page 56 for details of the applicable tubing sizes.

Construction

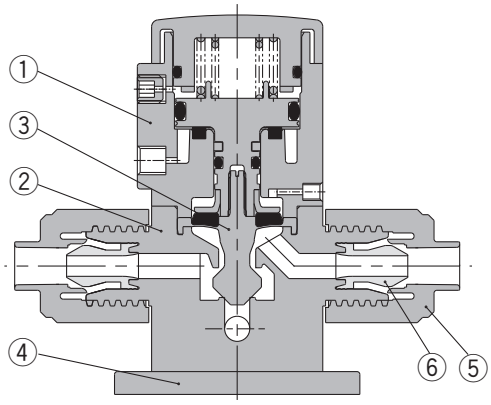

Component Parts

No.	Description	Material
1	**Actuator section**	PPS
2	**Body**	PFA
3	**Diaphragm**	PTFE
4	**End plate**	PPS
5	**Nut**	PFA
6	**Insert bushing**	PFA

Dimensions

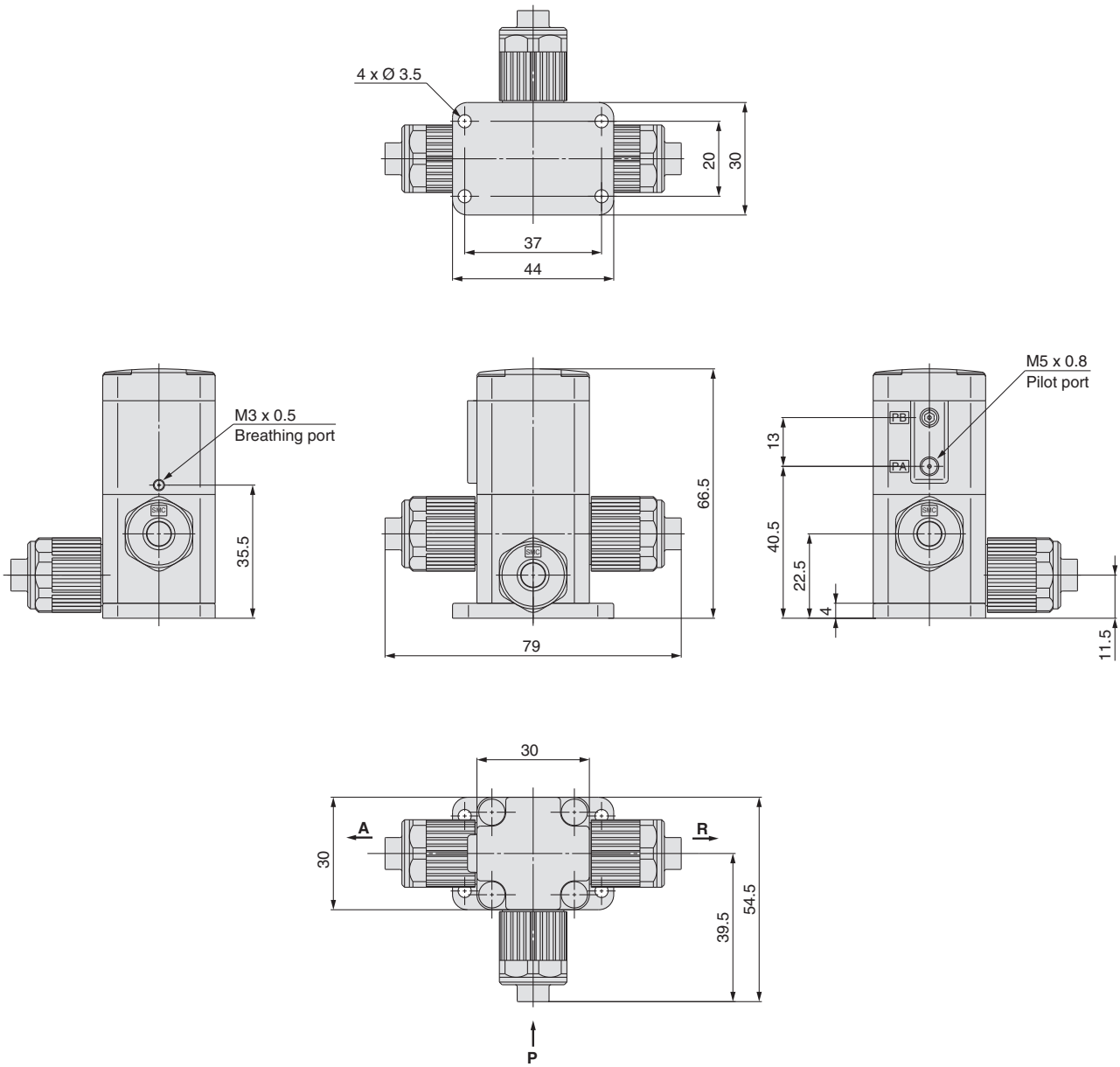
4 x Ø 3.5
20
30
37
44
M3 x 0.5
Breathing port
35.5
66.5
79
M5 x 0.8
Pilot port
PB
PA
13
40.5
22.5
4
11.5
30
A
R
30
39.5
54.5
P

Air Operated Threaded Type
LVA Series

How to Order Valve (Single Type)

For N.C.

Body class: 2

LVA 2 0 – 01 □ – A □ – V – Z

For N.O./Double acting

Body class: 2

LVA 2 1 – 01 □ – A □ – V

Body class: 1, 3, 4, 5, 6

LVA 3 0 – 02 □ – A □ – V

Port size, Pilot port thread type

Symbol	Thread type
—	Rc
N	NPT
F	G

Pilot port thread size 1/8

Valve type

0	N.C.

Body class

Symbol	Body class	Orifice dia.
2	2	Ø 4

Valve type

1	N.O.
2	Double acting

Specifications

—	None
V	Vacuum specification

∗: Applicable to only material symbols A, B, C, F and N. Vacuum specification is not available for LVA1□.

Body class

Symbol	Body class	Orifice dia.
1	1	Ø 2
3	3	Ø 8
4	4	Ø 12
5	5	Ø 20
6	6	Ø 22

Valve type

0	N.C.
1	N.O.
2	Double acting

∗: Refer to Variations for valve type combinations.

Option

—	None
1	With flow rate adjustment
2	With bypass
3	With flow rate adjustment & bypass
4	With indicator

∗: Refer to Variations for option combinations. Options cannot be combined.

Material

Symbol	Body	Actuator section / End plate	Diaphragm	Applicable option 1	2	3	4	Note
A	Stainless steel	PPS / —	PTFE	●	—	—	●	—
B	PPS	PPS	PTFE	●	—	—	●	Except LVA60
C	PFA	PPS	PTFE	●	●	●	●	—
D	Stainless steel	PPS / —	NBR	●	—	—	●	Except LVA60
E	Stainless steel	PPS / —	EPDM	●	—	—	●	Except LVA60
F	PFA	PVDF	PTFE	—	—	—	—	Hydrofluoric acid compatible (Only LVA40, 50 type)
G	PPS	PPS	NBR	●	—	—	●	Except LVA60
H	PPS	PPS	EPDM	●	—	—	●	Except LVA60
N	PFA	PPS	PTFE	●	●	●	●	Ammonium hydroxide compatible

Port size

Symbol	Port size	Body class
01	1/8	1
02	1/4	
01	1/8	2
02	1/4	
02	1/4	3
03	3/8	
03	3/8	4
04	1/2	
04	1/2	5
06	3/4	
10	1	6

Thread type

Symbol	Body class	Port thread type	Pilot port thread type
—	1, 2	Rc	M5
	3, 4, 5, 6		Rc1/8
N	1, 2	NPT	M5
	3, 4, 5, 6		NPT1/8
F	1, 2	G	M5
	3, 4, 5, 6		G1/8

Variations

Type	Symbol	Model	LVA10		LVA20		LVA30		LVA40		LVA50		LVA60
		Orifice diameter	Ø 2		Ø 4		Ø 8		Ø 12		Ø 20		Ø 22
		Port size	1/8	1/4	1/8	1/4	1/4	3/8	3/8	1/2	1/2	3/4	1
		Body material∗1: Stainless steel 316	○	○	○	○	○	○	○	○	○	○	○
		Body material∗1: PPS	○	○	—	○	—	○	—	○	—	○	—
		Body material∗1: PFA	○	—	—	○	—	○	—	○	—	○	○
Basic	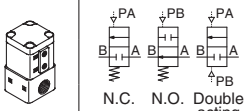 N.C. N.O. Double acting	N.C.	○	○	○	○	○	○	○	○	○	○	○
		N.O.	—	—	○	○	○	○	○	○	○	○	○
		Double acting	○	○	○	○	○	○	○	○	○	○	○
With flow rate adjustment	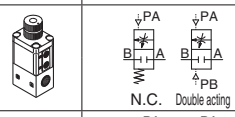 N.C. Double acting	N.C.	—	—	○	○	○	○	○	○	○	○	○
		Double acting	—	—	○	○	○	○	○	○	○	○	○
With bypass	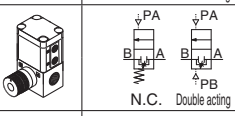 N.C. Double acting	N.C.	—	—	—	—	—	○	—	○	—	○	—
		Double acting	—	—	—	—	—	○	—	○	—	○	—
With flow rate adjustment & bypass	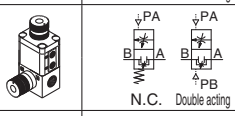 N.C. Double acting	N.C.	—	—	—	—	—	○	—	○	—	○	—
		Double acting	—	—	—	—	—	○	—	○	—	○	—
With indicator	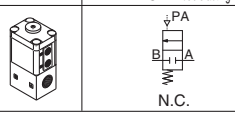 N.C.	N.C.	—	—	○	○	○	○	○	○	○	○	○

∗1: Refer to Material for the applicable optional body materials.

Basic type

LVA-Z

With flow rate adjustment

Standard Specifications

Model		LVA10	LVA20	LVA30	LVA40	LVA50	LVA60
Orifice diameter		Ø 2	Ø 4	Ø 8	Ø 12	Ø 20	Ø 22
Port size		1/8, 1/4	1/8, 1/4	1/4, 3/8	3/8, 1/2	1/2, 3/4	1
Flow rate characteristics	**Kv**	0.06	0.3	1.4	2.8	5.1	6.8
	Cv	0.07	0.35	1.7	3.3	6	8
Withstand pressure [MPa]		1					
Operating pressure [MPa]	**A → B**	0 to 0.5	(–94 kPa)*3 0 to 0.5			(–94 kPa)*3 0 to 0.4	
	B → A	0 to 0.05	(–94 kPa)*3 0 to 0.2			(–94 kPa)*3 0 to 0.1	
Back pressure [MPa]	**N.C./N.O.*2**	0.15 or less	0.3 or less			0.2 or less	
	Double acting	0.3 or less	0.4 or less			0.3 or less	
Valve leakage [cm³/min]		0 (with water pressure)					
Pilot air pressure [MPa]		0.3 to 0.5					
Pilot port size	**Standard**	M5	M5*4	Rc1/8, NPT1/8, G1/8			
	-Z type*5	—	Rc1/8, NPT1/8, G1/8	—			
Fluid temperature [°C]		0 to 100*1					
Ambient temperature [°C]		0 to 60					
Weight [kg]	**Stainless steel**	0.12	0.18	0.44	0.86	1.67	1.96
	PPS	0.05	0.08	0.18	0.32	0.73	—
	PFA	0.05	0.09	0.20	0.35	0.78	0.90

*1: 0 to 60 °C when the diaphragm is NBR or EPDM.
*2: The N.O. type is not available for LVA10.
*3: When using for vacuum, select the product number ending in "-V". This product cannot be used for vacuum retention. Also, connecting the vacuum to the B port may reduce the life of the product.
*4: Applicable for the LVC21 (N.O.) and LVC22 (double acting) types
*5: Applicable for the LVC20 (N.C.)-Z type

⚠Precautions

Be sure to read this before handling the products. Refer to the back cover for Safety Instructions, and pages 51 and 52 for High Purity Chemical Liquid Valve Precautions.

Piping

⚠Caution

1. Avoid using metal fittings with a resin body (taper threads).

This can cause damage to the valve body.

Option

■ With flow rate adjustment

Adjusts the flow rate by controlling the diaphragm stroke.

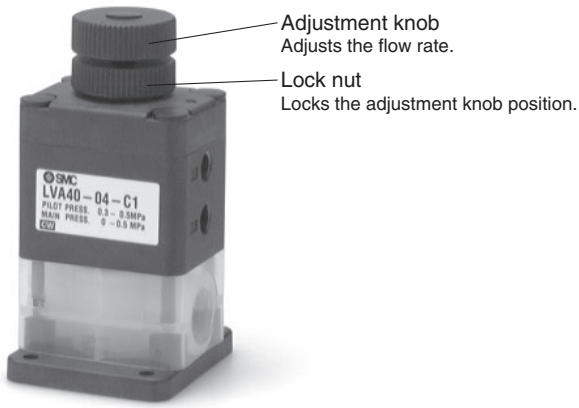

Construction

Standard type
N.C. type

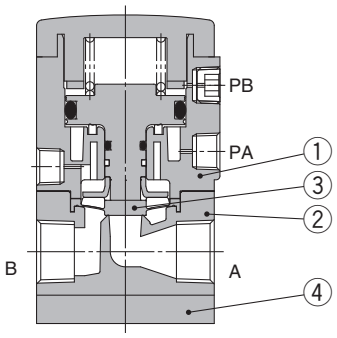

N.O. type

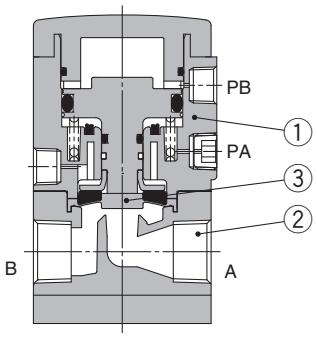

Double acting type

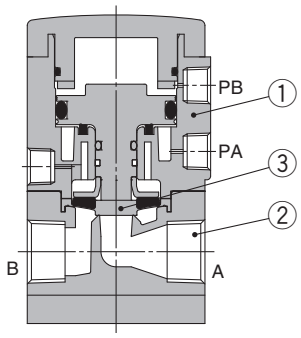

With flow rate adjustment

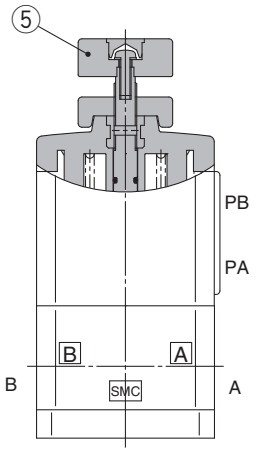

With indicator

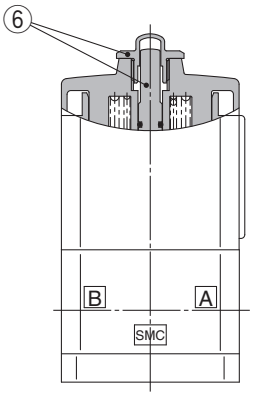

With bypass (Body material: PFA)

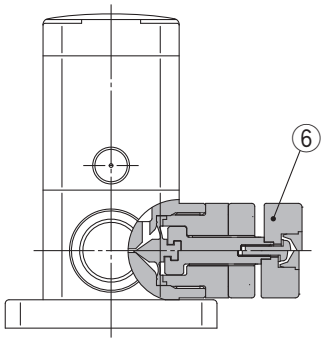

Component Parts

No.	Description	Material	Option
1	**Actuator section**	PPS	PVDF
2	**Body**	Stainless steel	—
		PPS	
		PFA	
3	**Diaphragm**	PTFE	—
		NBR	
		EPR	
4	**End plate** (PFA body only)	PPS	PVDF
5	**Flow rate adjuster section**	PPS	—
6	**Indicator**	PP	—

Dimensions

Body material: Stainless steel

LVA20

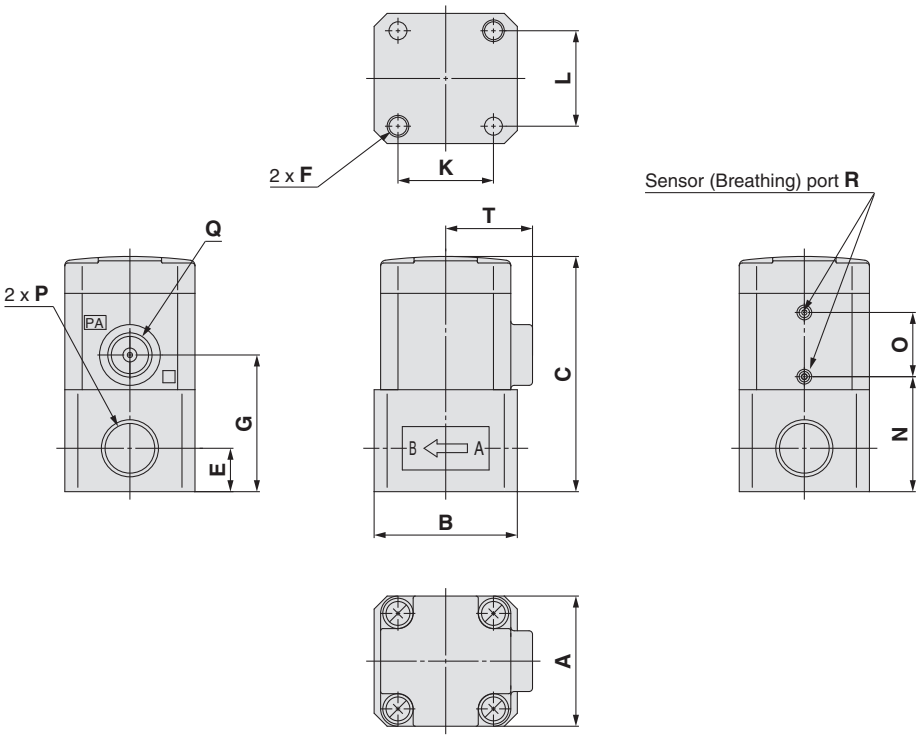

LVA1□
LVA21/22
LVA3□ to 6□

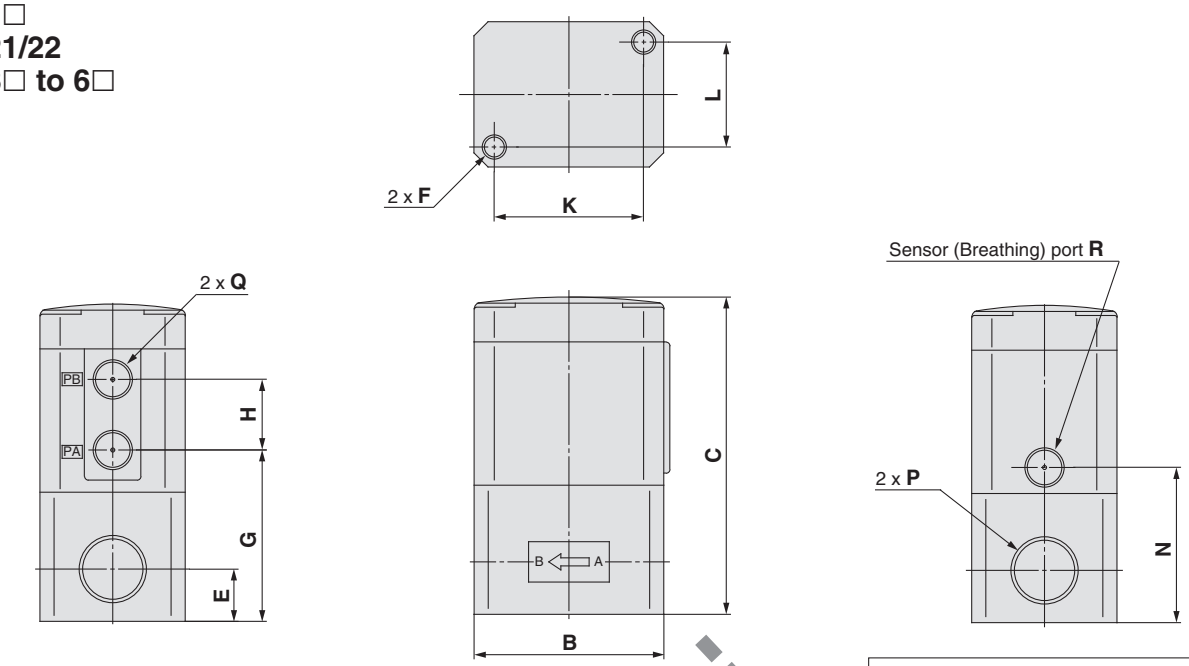

Dimensions

Body material: Stainless steel

With flow rate adjustment

LVA20

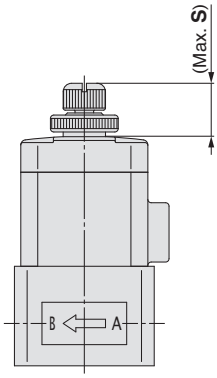

LVA22
LVA3$^{0}_{2}$ to 6$^{0}_{2}$

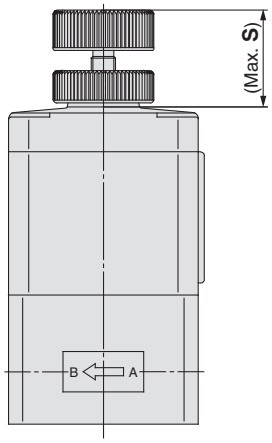

Dimensions [mm]

Model	S
LVA2□	14.5
LVA3□	24.4
LVA4□	29
LVA5□	34.5
LVA6□	36

With indicator

LVA20

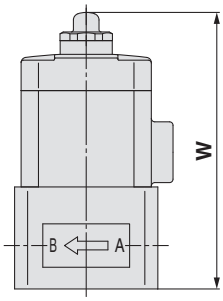

LVA30 to 60

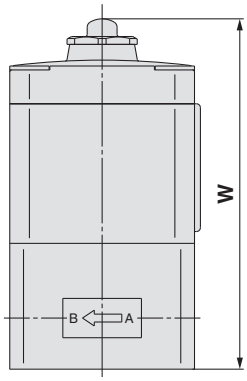

Dimensions [mm]

Model	W
LVA20	63.7
LVA30	89.1
LVA40	109.9
LVA50	140.5
LVA60	147.8

Dimensions [mm]

Model	A	B	C	E	F	G	H	K	L	N	O	P	Q	R	T
LVA1□	20	33	49.5	10	M5 x 0.8 x 4	27.5	11	—	13	27.5	—	Rc1/8, 1/4 NPT1/8, 1/4 G1/8, 1/4*	M5 x 0.8	Ø 4.2	—
LVA20	30	33	54.2	10	M5 x 0.8 x 5	31.5	—	22	22	26.5	14.8		Rc1/8 NPT1/8 G1/8*	Ø 2.4	20
LVA2$^{1}_{2}$	30	33	57	10	M5 x 0.8 x 5	31	13	22	22	26	—		M5 x 0.8	M3 x 0.5	—
LVA3□	36	47	78.6	13	M6 x 1.0 x 8	42.5	17.5	37	26	38.5	—	Rc1/4, 3/8 NPT1/4, 3/8 G1/4, 3/8*	Rc1/8 NPT1/8 G1/8*	Rc1/8 NPT1/8 G1/8*	—
LVA4□	46	60	95.4	16	M8 x 1.25 x 10	54.5	18	47.5	33.5	47.5	—	Rc3/8, 1/2 NPT3/8, 1/2 G3/8, 1/2*			—
LVA5□	58	75	122.5	19	M8 x 1.25 x 10	61.5	27.5	60	43	55.5	—	Rc1/2, 3/4 NPT1/2, 3/4 G1/2, 3/4*			—
LVA6□	58	85	129.8	24	M8 x 1.25 x 10	68.8	27.5	60	43	62.8	—	Rc1 NPT1 G1*			—

*: For details on G threads and thread depths, refer to page 55.

Dimensions

Body material: PPS

LVA20

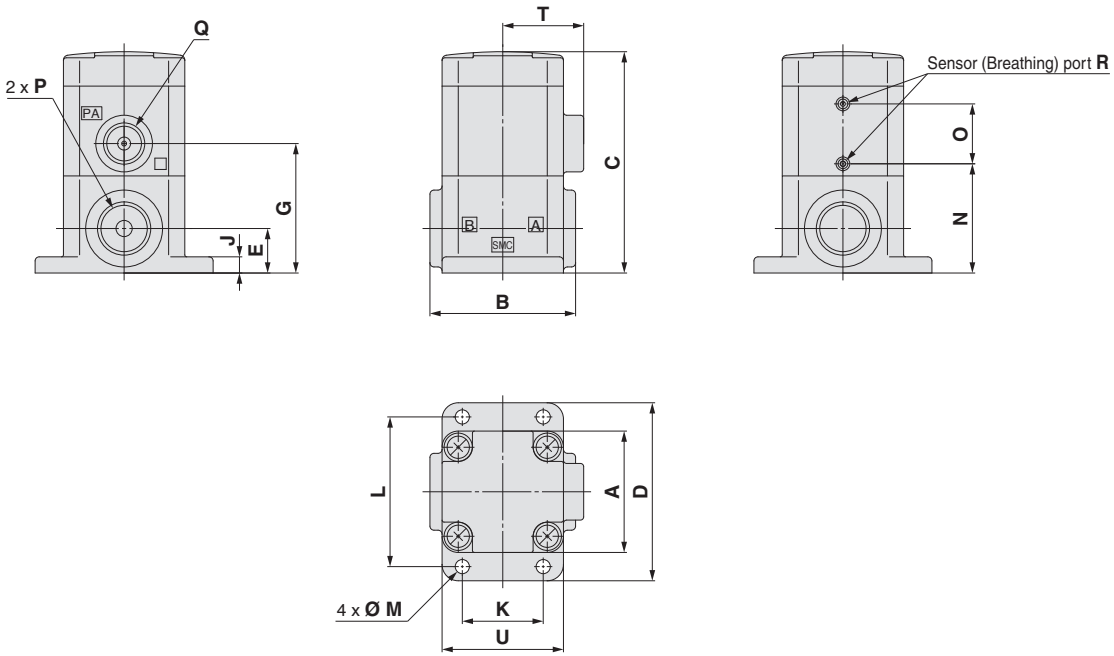

LVA1□
LVA21/22
LVA3□ to 6□

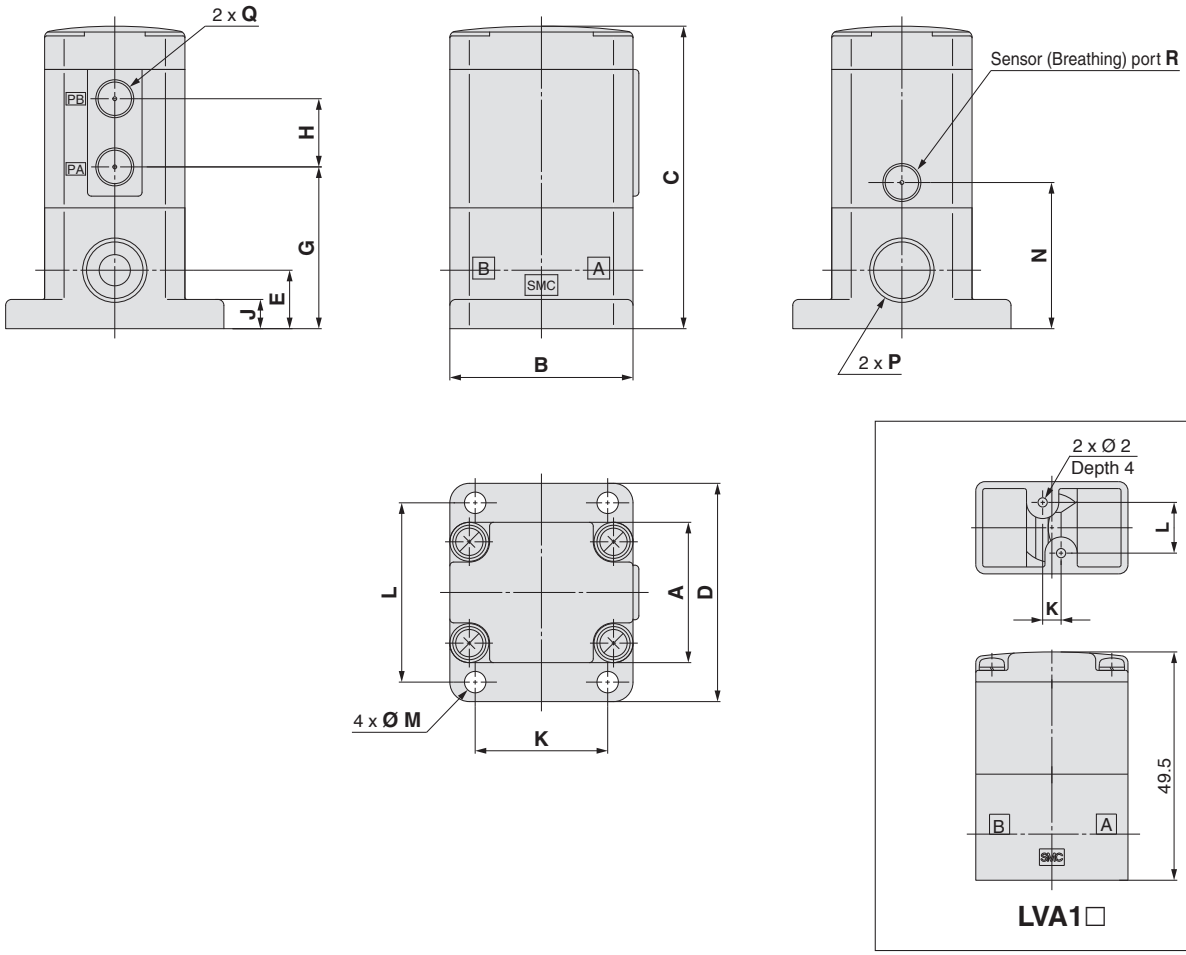

LVA1□

Dimensions

Body material: PPS
With flow rate adjustment
LVA20

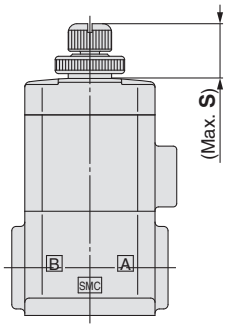

LVA22
LVA3$^{0}_{2}$ to 5$^{0}_{2}$

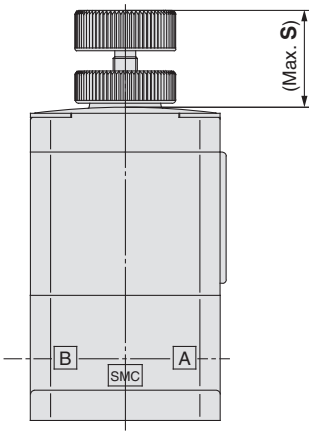

Dimensions [mm]

Model	S
LVA2□	14.5
LVA3□	24.4
LVA4□	29
LVA5□	34.5

With indicator
LVA20

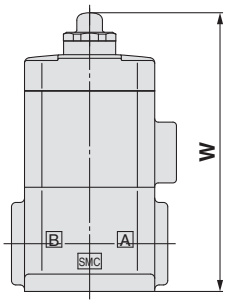

LVA30 to 50

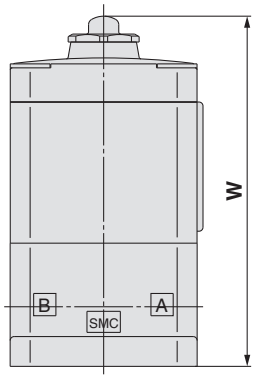

Dimensions [mm]

Model	W
LVA20	64.2
LVA30	88.1
LVA40	110.4
LVA50	147

Dimensions [mm]

Model	A	B	C	D	E	G	H	J	K	L	M	N	O	P	Q	R	T	U
LVA1□	20	33	49.5	—	10	27.5	11	—	4	11	—	27.5	—	Rc1/8, 1/4 NPT1/8, 1/4 G1/8, 1/4*	M5 x 0.8	Ø 4.2	—	—
LVA20	30	36	54.7	44	11	32	—	4	20	37	3.5	27	14.8	Rc1/4 NPT1/4 G1/4*	Rc1/8 NPT1/8 G1/8*	Ø 2.4	20	30
LVA2$^{1}_{2}$	30	36	57.5	44	11	31.5	13	4	20	37	3.5	26.5	—		M5 x 0.8	M3 x 0.5	—	—
LVA3□	36	47	77.6	56	15	41.5	17.5	7.5	34	46	5.5	37.5	—	Rc3/8 NPT3/8 G3/8*	Rc1/8 NPT1/8 G1/8*	Rc1/8 NPT1/8 G1/8*	—	—
LVA4□	46	60	95.9	68	22	55	18	8	42	57	5.5	48	—	Rc1/2 NPT1/2 G1/2*			—	—
LVA5□	58	75	129	84	26	68	27.5	8	56	71	6.5	62	—	Rc3/4 NPT3/4 G3/4*			—	—

*: For details on G threads and thread depths, refer to page 55.

Dimensions

Body material: PFA

LVA1□

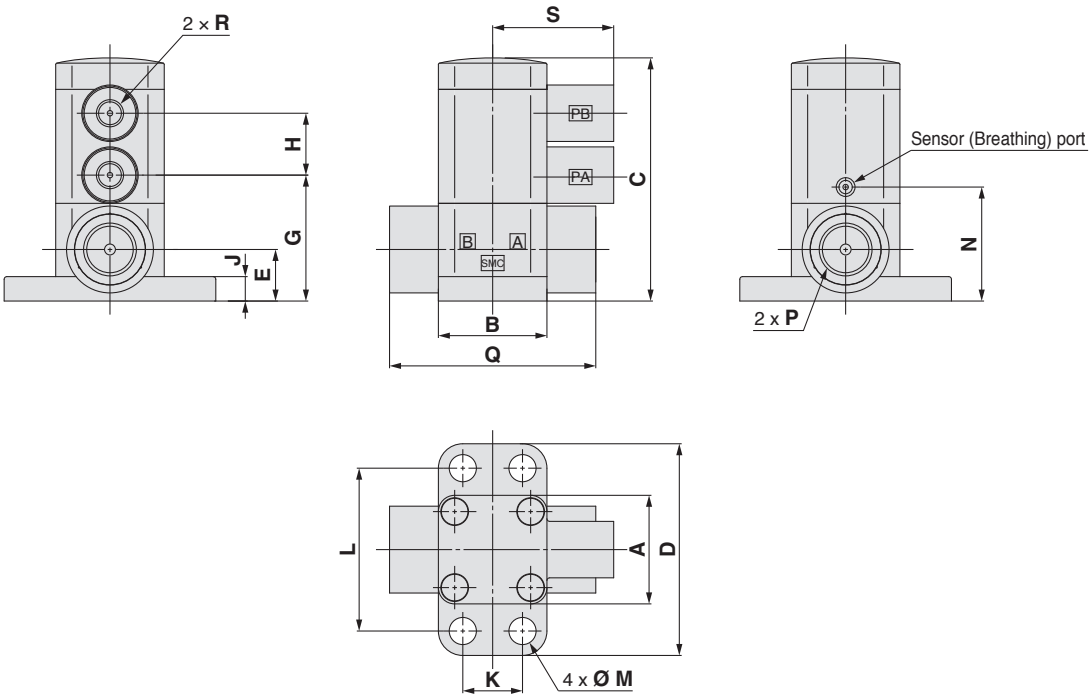

LVA20

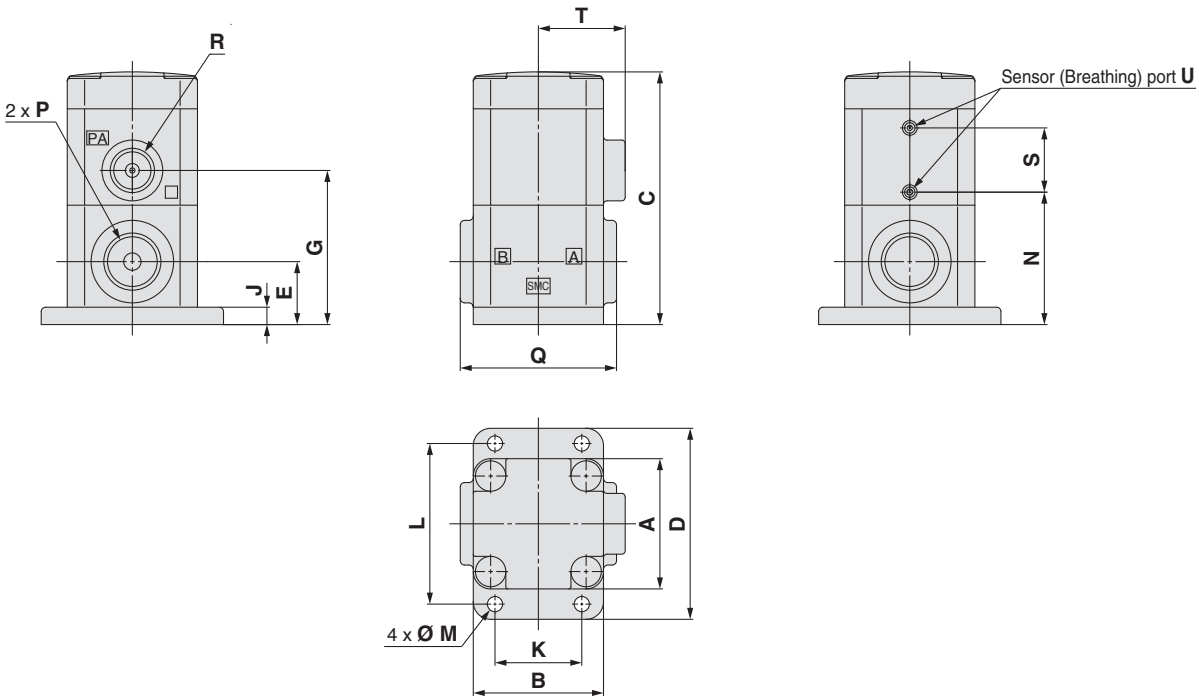

Dimensions [mm]

Model	A	B	C	D	E	G	H	J	K	L	M	N	P	Q	R	S	T	U
LVA1□	20	20	44.8	39	9.5	23.2	11.4	4.5	11	30	5	21	Rc1/8 NPT1/8 G1/8*	38	M5 x 0.8	22.3	—	—
LVA20	30	30	58.2	44	14.5	35.5	—	4	20	37	3.5	30.5	Rc1/4 NPT1/4 G1/4*	36	Rc1/8 NPT1/8 G1/8*	14.8	20	Ø 2.4

*: For details on G threads and thread depths, refer to page 55.

Dimensions

Body material: PFA

LVA21/22
LVA3□ to 6□

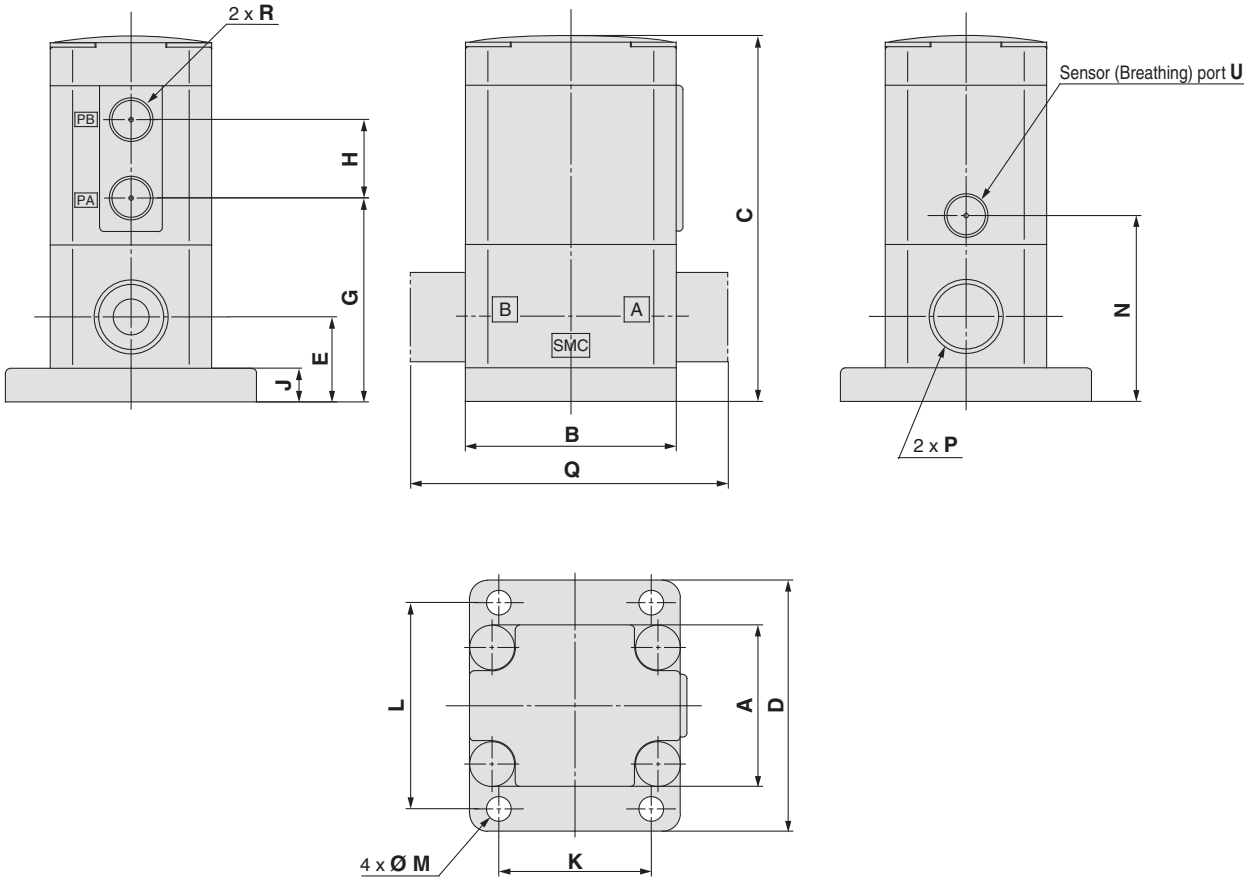

Dimensions [mm]

Model	A	B	C	D	E	G	H	J	K	L	M	N	P	Q	R	U
LVA2$\frac{1}{2}$	30	36	61	44	14.5	35	13	4	20	37	3.5	30	Rc1/4 NPT1/4 G1/4*	—	M5 x 0.8	M3 x 0.5
LVA3□	36	47	81.6	56	19	45.5	17.5	7.5	34	46	5.5	41.5	Rc3/8 NPT3/8 G3/8*	—	Rc1/8 NPT1/8 G1/8*	Rc1/8 NPT1/8 G1/8*
LVA4□	46	60	95.9	68	22	55	18	8	42	57	5.5	48	Rc1/2 NPT1/2 G1/2*	—		
LVA5□	58	75	129	84	26	68	27.5	8	56	71	6.5	62	Rc3/4 NPT3/4 G3/4*	—		
LVA6□	58	75	137.8	84	32	76.8	27.5	8	56	70.8	6.5	71	Rc1 NPT1 G1*	117		

*: For details on G threads and thread depths, refer to page 55.

Dimensions

Body material: PFA

With flow rate adjustment

LVA20

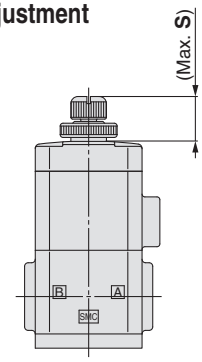

LVA22
LVA3$^{0}_{2}$ to 6$^{0}_{2}$

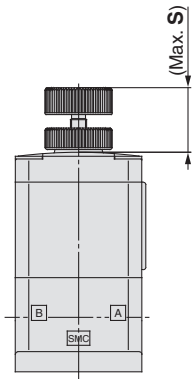

Dimensions [mm]

Model	S
LVA2□	14.5
LVA3□	24.4
LVA4□	29
LVA5□	34.5
LVA6□	36

With indicator

LVA20

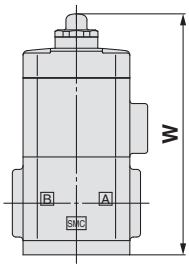

LVA30 to 60

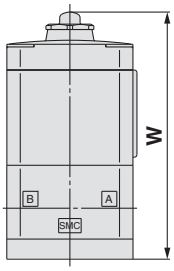

Dimensions [mm]

Model	W
LVA20	67.7
LVA30	92.1
LVA40	110.4
LVA50	147
LVA60	155.8

With bypass

LVA3$^{0}_{2}$ to 5$^{0}_{2}$

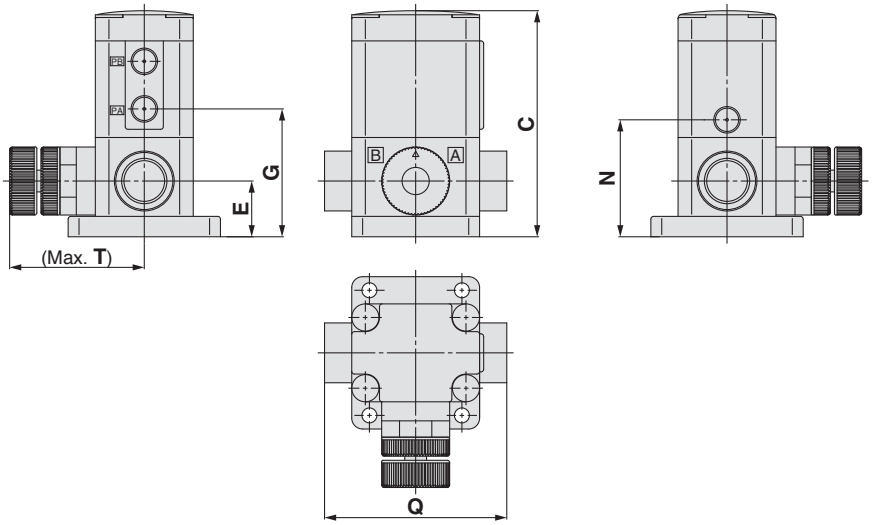

Dimensions [mm]

Model	C	E	G	N	T	Q
LVA3□	83.1	20.5	47	43	50.5	67
LVA4□	95.9	22	55	48	54.5	86
LVA5□	129	26	68	62	60	104

With flow rate adjustment & bypass

LVA3$^{0}_{2}$ to 5$^{0}_{2}$

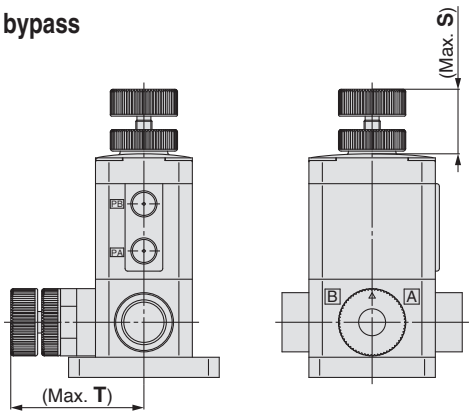

Dimensions [mm]

Model	S	T
LVA3□	24.4	50.5
LVA4□	29	54.5
LVA5□	34.5	60

LVA Series
Manifolds

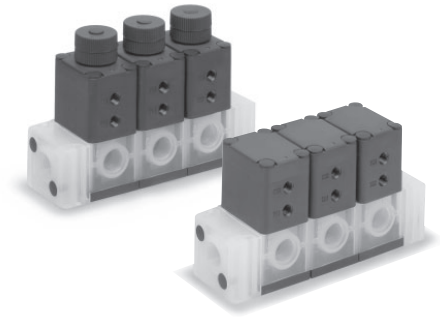

Manifold Specifications

Model	LLA2A	LLA3A	LLA4A	LLA5A
Manifold type	Stacking			
P (IN), A (OUT) type	Common IN/Individual OUT			
Valve stations	2 to 5 stations			
Port size (port P)	1/4	3/8	1/2	3/4
Port size (port A)	1/4	3/8	1/2	3/4

∗: Please contact SMC if the manifold will be used with vacuum and A → P flow.

How to Order Manifold Base

LLA 2 A – 05 – 02 ☐ – C

Body class

Symbol	Body class
2	2
3	3
4	4
5	5

Base type

A	Stacking

Manifold stations

02	2 stations
⋮	⋮
05	5 stations

Port size (port P)

Symbol	Port size	Body class
02	1/4	2
03	3/8	3
04	1/2	4
06	3/4	5

Thread type

Symbol	Thread type
—	Rc
N	NPT

Material

Symbol	Manifold
C	PFA

How to Order Valve

LVA 2 0 A – 02 ☐ – C ☐

It is not possible to order single unit valves for the manifold. For details, refer to Maintenance 4. in the High Purity Chemical Liquid Valve Precautions 2 on page 56.

Body class

Symbol	Body class	Orifice dia.
2	2	Ø 4
3	3	Ø 8
4	4	Ø 12
5	5	Ø 20

Valve type

0	N.C.
1	N.O.
2	Double acting

Body type

A	Stacking type for manifold

Port size (port A)

Symbol	Port size	Body class
02	1/4	2
03	3/8	3
04	1/2	4
06	3/4	5

Thread type

Symbol	Thread type
—	Rc
N	NPT

Option

—	None
1	With flow rate adjustment
4	With indicator

∗: Options cannot be combined.

Material

Symbol	Body	Actuator section End plate	Diaphragm	O-ring	Applicable option 1	Applicable option 4	Note
C	PFA	PPS	PTFE	FKM	●	●	—
F	PFA	PVDF	PTFE	FKM	—	—	Hydrofluoric acid compatible (Only LVA40, 50 type)
N	PFA	PPS	PTFE	EPDM	●	●	Ammonium hydroxide compatible

∗: An O-ring is in place for outlet sealing on the outside of the main sealing of the manifold body connection (wetted part). Refer to page 30 for details.

How to Order Manifold Assembly (Example)

Enter the part number of the valves to be mounted together with the manifold base part number.

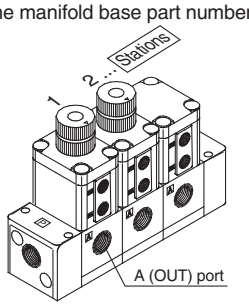

Stations are counted from station 1 on the left side, with the A (OUT) ports in front.

<Example>

LLA2A-03-02-C ····· 1 set Manifold base part no.

∗ LVA20A-02-C1 ····· 2 sets Valve part no. (Stations 1 & 2)

∗ LVA20A-02-C ····· 1 set Valve part no. (Station 3)

- Prefix the asterisk to the part no. of the valves, etc.

Enter together in order counting from station 1 on the left side, with the A (OUT) ports in front.

Manifold Variations

Type	Symbol	Model	LVA20A	LVA30A	LVA40A	LVA50A
		Manifold material	PFA			
		Port size	1/4	3/8	1/2	3/4
		Orifice diameter / Valve type	Ø 4	Ø 8	Ø 12	Ø 20
Basic 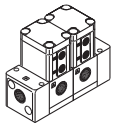	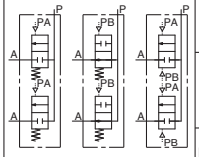 N.C. N.O. Double acting	N.C.	○	○	○	○
		N.O.	○	○	○	○
		Double acting	○	○	○	○
With flow rate adjustment 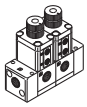	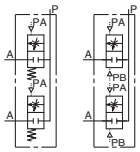 N.C. Double acting	N.C.	○	○	○	○
		Double acting	○	○	○	○

Construction

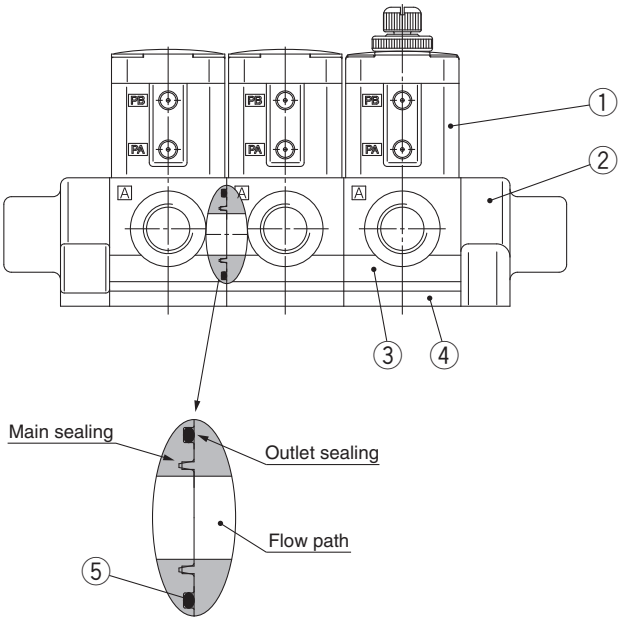

Manifold body connection

Component Parts

No.	Description	Material
1	**Actuator section**	PPS
		PVDF
2	**Manifold**	PFA
3	**Body**	PFA
4	**End plate**	PPS
		PVDF
5	**O-ring**	FKM
		EPDM

Dimensions

LLA□A- Stations -□□-C

Size 2

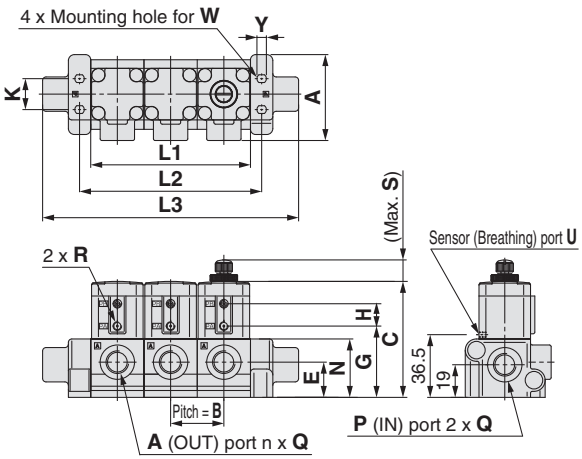

Size 3 to 5

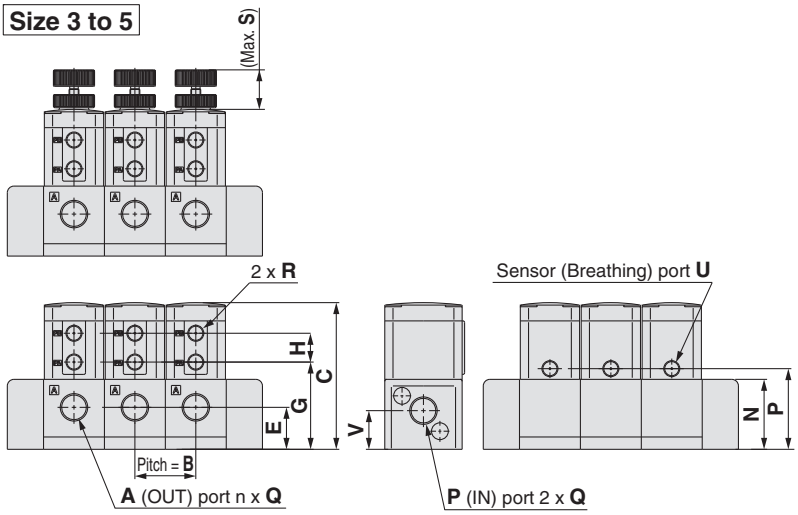

Dimensions [mm]

Model	S
LLA2A	14.5
LLA3A	24.4
LLA4A	29
LLA5A	34.5

[mm]

Model	Station / Symbol	2	3	4	5
LLA2A	**L1**	62	93	124	155
	L2	75	106	137	168
	L3	118	149	180	211
LLA3A	**L1**	74	111	148	185
	L2	90	127	164	201
	L3	118	155	192	229
LLA4A	**L1**	94	141	188	235
	L2	112	159	206	253
	L3	144	191	238	285
LLA5A	**L1**	118	177	236	295
	L2	140	199	258	317
	L3	178	237	296	355

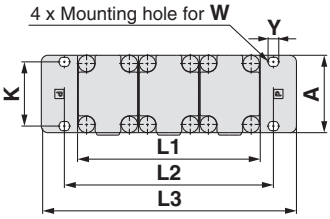

Dimensions [mm]

Model	A	B	C	E	G	H	K	N	P	Q	R	U	V	W	Y
LLA2A	50	31	67.5	20.5	41.5	13	18	34	36.5	Rc1/4, NPT1/4	M5 x 0.8	M3 x 0.5	19	M4	5.5
LLA3A	47	37	89.1	25.5	53	17.5	39	42.5	49	Rc3/8, NPT3/8	Rc1/8 NPT1/8	Rc1/8 NPT1/8	23.5	M5	6.5
LLA4A	60	47	103.4	29	62.5	18	50	48	55.5	Rc1/2, NPT1/2			26	M6	7.5
LLA5A	75	59	135.5	32.5	74.5	27.5	61	61	68.5	Rc3/4, NPT3/4			29	M6	7.5

LVA Series
3 Port

Standard Specifications

Model		LVA200
Orifice diameter		Ø 4
Port size		1/4
Flow rate characteristics	**Kv**	0.2
	Cv	0.3
Withstand pressure [MPa]		1
Operating pressure [MPa]		0 to 0.5
Valve leakage [cm³/min]		0 (with water pressure)
Pilot air pressure [MPa]		0.4 to 0.5
Pilot port size		M5 x 0.8
Fluid temperature [°C]		0 to 100
Ambient temperature [°C]		0 to 60
Weight [kg]		0.162

How to Order Valve

LVA 2 0 0 – 02 □ – C

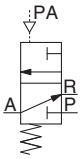

N.C.

Body class

Symbol	Body class	Orifice dia.
2	2	Ø 4

Valve type

0	N.C.

Port size

Symbol	Port size
02	1/4

Thread type

Symbol	Thread type
—	Rc
N	NPT

Material

Symbol	Body	Actuator section	Diaphragm
C	PFA	PPS	PTFE

Construction

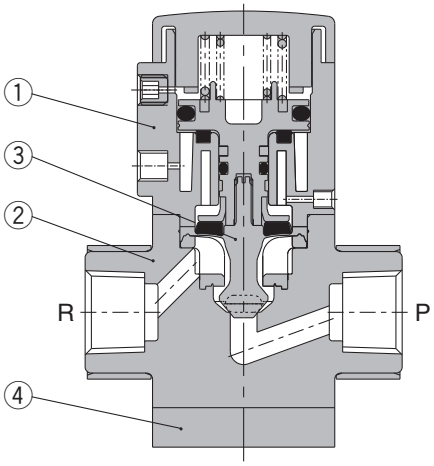

Component Parts

No.	Description	Material
1	**Actuator section**	PPS
2	**Body**	PFA
3	**Diaphragm**	PTFE
4	**End plate**	Stainless steel

Dimensions

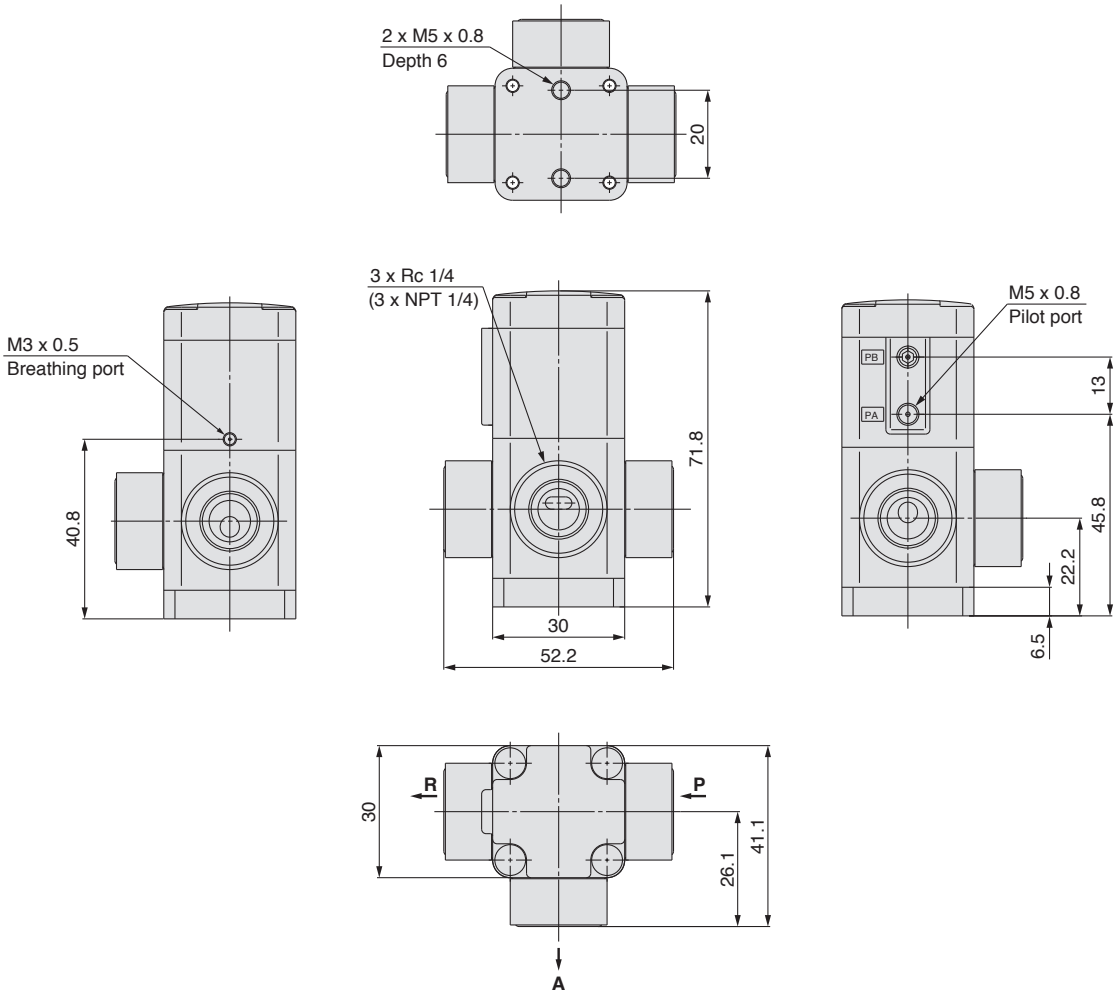
2 x M5 x 0.8
Depth 6
20
3 x Rc 1/4
(3 x NPT 1/4)
M3 x 0.5
Breathing port
40.8
71.8
30
52.2
M5 x 0.8
Pilot port
PB
PA
13
45.8
22.2
6.5
R
P
30
26.1
41.1
A

Air Operated, Organic Solvents Compatible Double Ferrule Fittings/Metal Gasket Seal Fittings/Integrated Tubing

LVA Series

How to Order Valve

LVA 2 0 – D 07 ☐ – AD ☐ – ☐

Body class

Symbol	Body class	Orifice dia.
2	2	Ø 4
3	3	Ø 8
4	4	Ø 12
5	5	Ø 20
6	6	Ø 22

Valve type

0	N.C.
1	N.O.
2	Double acting

Fitting type

Symbol	Type
D	With double ferrule fittings
G	With metal gasket seal fittings
T	Integrated tubing

Applicable tubing size

Symbol	Connecting tubing size	Body class 2	3	4	5	6
Metric size						
06	Ø 6	○				
10	Ø 10		○			
12	Ø 12			○		
19	Ø 19				○	
Inch size						
07	1/4	○				
11	3/8		○			
13	1/2			○		
19	3/4				○	
25	1					○

∗: Metric size is only available for fitting types D and T.

Pilot port thread type

Symbol	Body class	Thread type
—	2	M5 x 0.8
	3, 4, 5, 6	Rc1/8
N	3, 4, 5, 6	NPT1/8

Material

Symbol	Body	Actuator section	Diaphragm	Seal	Buffer
AD	Stainless steel	ADC	PTFE	FKM	FKM
ND				EPDM	EPDM

Option 1

—	None
1	With flow rate adjustment
4	With indicator
5	High back pressure (0.5 MPa) tolerant
6	High back pressure with flow rate adjustment
9	High back pressure with indicator

∗: With flow rate adjustment: Only available with N.C. valve and double acting valve
∗: With indicator: Only available with N.C. valve

Option 2

—	None
W	Low water hammer type
E	Body wetted parts equivalent to EP grade

LVA30-D11-AD
Double ferrule fittings

LVA60-T25-AD
Integrated tubing

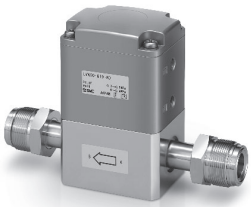

LVA50-G19-AD
Metal gasket seal fittings

Standard Specifications

Model			LVA20	LVA30	LVA40	LVA50	LVA60
Tubing O.D.		Metric size∗1	6	10	12	19	—
		Inch size	1/4	3/8	1/2	3/4	1
Orifice diameter			Ø 4	Ø 8	Ø 12	Ø 20	Ø 22
Flow rate characteristics		Kv	0.3	1.4	2.8	5.1	6.8
		Cv	0.35	1.7	3.3	6	8
Withstand pressure [MPa]			1				
Operating pressure [MPa]	Standard	A→B	0 to 0.5			0 to 0.4	
		B→A	0 to 0.2			0 to 0.1	
	High back pressure	A→B	0 to 0.5				
		B→A	0 to 0.4				
Back pressure [MPa]	Standard	N.C./N.O.	0.3 or less			0.2 or less	
		Double acting	0.4 or less			0.3 or less	
	High back pressure∗2	N.C./N.O./Double acting	0.5 or less				
Valve leakage [cm³/min]			0 (with water pressure)				
Pilot air pressure [MPa]			0.3 to 0.5 (High back pressure: 0.5 to 0.8)∗2				
Pilot port size			M5	Rc1/8, NPT1/8			
Fluid temperature [°C]			0 to 100				
Ambient temperature [°C]			0 to 60				
Fitting type			With double ferrule fittings, With metal gasket seal fittings, Integrated tubing				

∗1: Metric size is only available for fitting types D and T.
∗2: High back pressure is optional.

Dimensions

Body material: Stainless steel
With double ferrule fittings

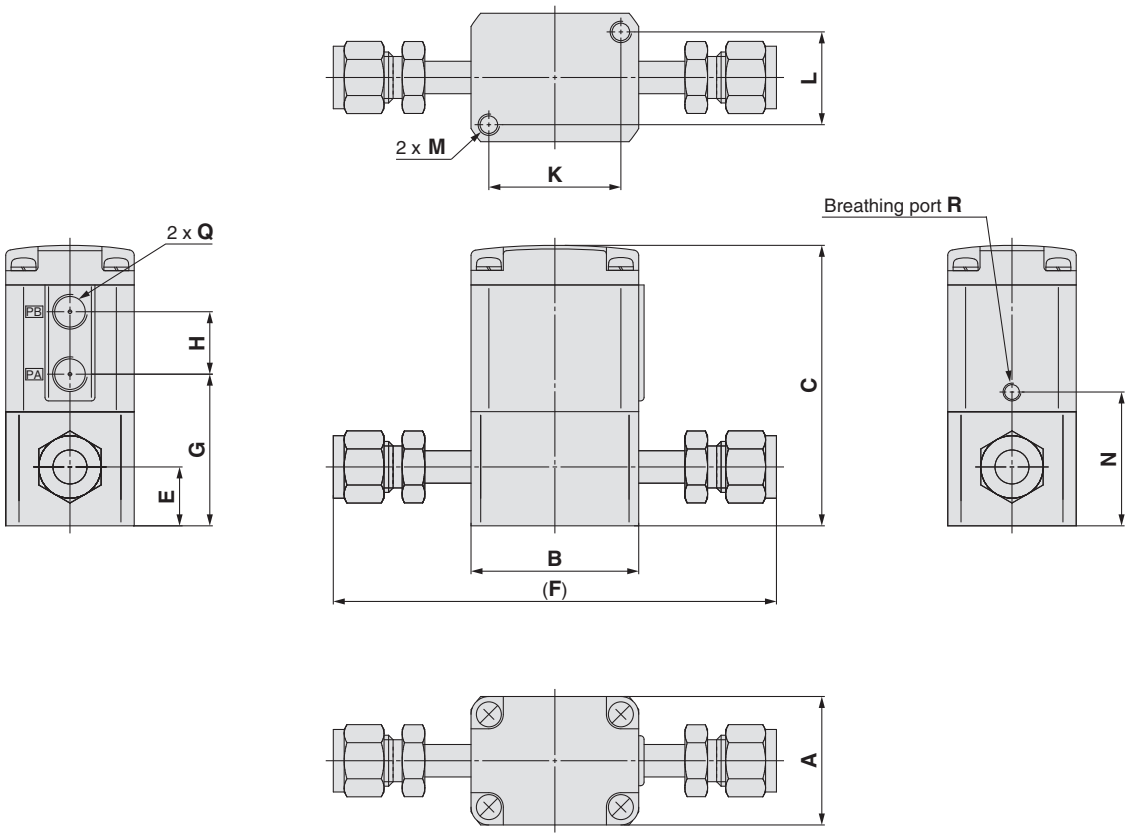

With indicator

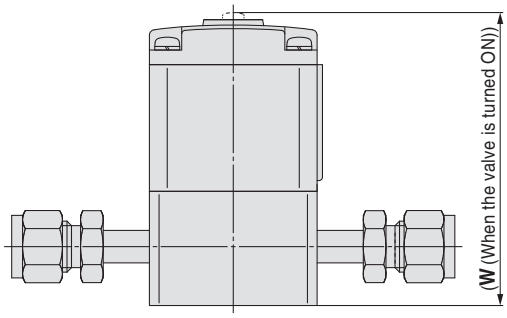

With flow rate adjustment

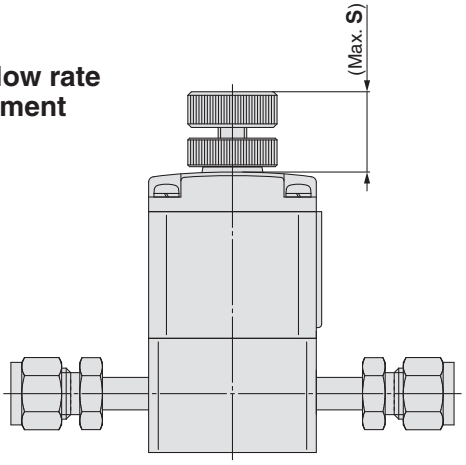

Dimensions [mm]

Model	A	B	C	E	F	G	H	K	L	M	N	Q	R	S	W
LVA2□-D□-$^{AD}_{ND}$	30	30	54.5	12	96.4	30.5	13	22	22	M5 x 0.8 Thread depth 5	25.5	M5 x 0.8	M3 x 0.5	17.1	58.4
LVA3□-D□-$^{AD}_{ND}$	36	47	78.6	16.5	127	42.5	17.5	37	26	M6 x 1 Thread depth 8	37.5	Rc1/8 NPT1/8	M5 x 0.8	24.9	82.1
LVA4□-D□-$^{AD}_{ND}$	46	60	85.9	16.5	147.2	48	18	47.5	33.5	M8 x 1.25 Thread depth 10	40	Rc1/8 NPT1/8	M5 x 0.8	30	89.9
LVA5□-D19-$^{AD}_{ND}$	58	75	120	23	166.8	62	27.5	60	43	M8 x 1.25 Thread depth 10	55	Rc1/8 NPT1/8	M5 x 0.8	36.1	125.5
LVA6□-D25-$^{AD}_{ND}$	58	75	129	27	190.2	71	27.5	60	43	M8 x 1.25 Thread depth 10	64	Rc1/8 NPT1/8	M5 x 0.8	36.1	136

Dimensions

Body material: Stainless steel
With metal gasket seal fittings

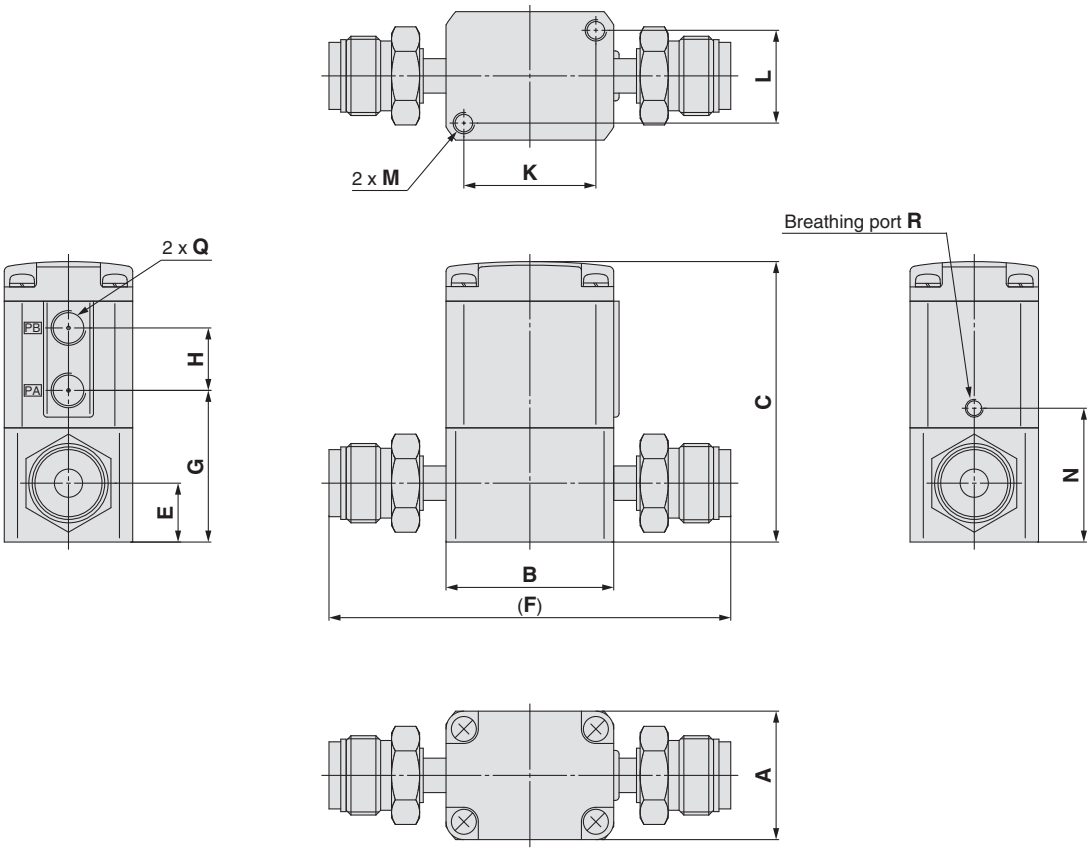

With indicator

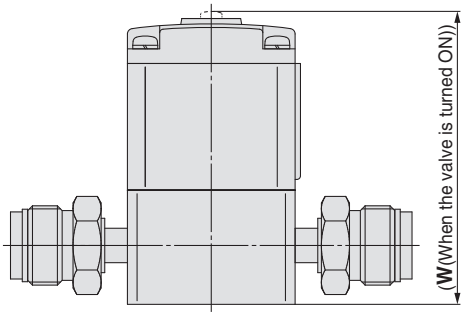

With flow rate adjustment

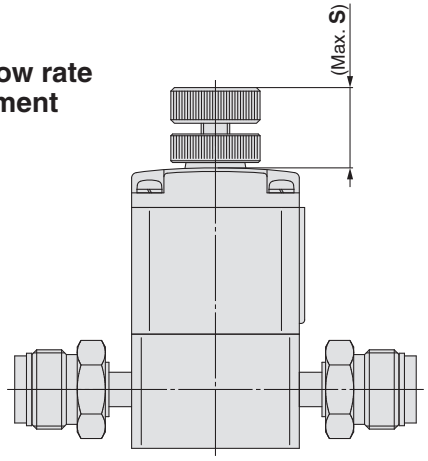

Dimensions [mm]

Model	A	B	C	E	F	G	H	K	L	M	N	Q	R	S	W
LVA2□-G07-AD/ND	30	30	54.5	12	91	30.5	13	22	22	M5 x 0.8 Thread depth 5	25.5	M5 x 0.8	M3 x 0.5	17.1	58.4
LVA3□-G11-AD/ND	36	47	78.6	16.5	112.6	42.5	17.5	37	26	M6 x 1 Thread depth 8	37.5	Rc1/8 NPT1/8	M5 x 0.8	24.9	82.1
LVA4□-G13-AD/ND	46	60	85.9	16.5	131.6	48	18	47.5	33.5	M8 x 1.25 Thread depth 10	40	Rc1/8 NPT1/8	M5 x 0.8	30	89.9
LVA5□-G19-AD/ND	58	75	120	23	178.2	62	27.5	60	43	M8 x 1.25 Thread depth 10	55	Rc1/8 NPT1/8	M5 x 0.8	36.1	125.5
LVA6□-G25-AD/ND	58	75	129	27	192.8	71	27.5	60	43	M8 x 1.25 Thread depth 10	64	Rc1/8 NPT1/8	M5 x 0.8	36.1	136

Dimensions

Body material: Stainless steel
Integrated tubing

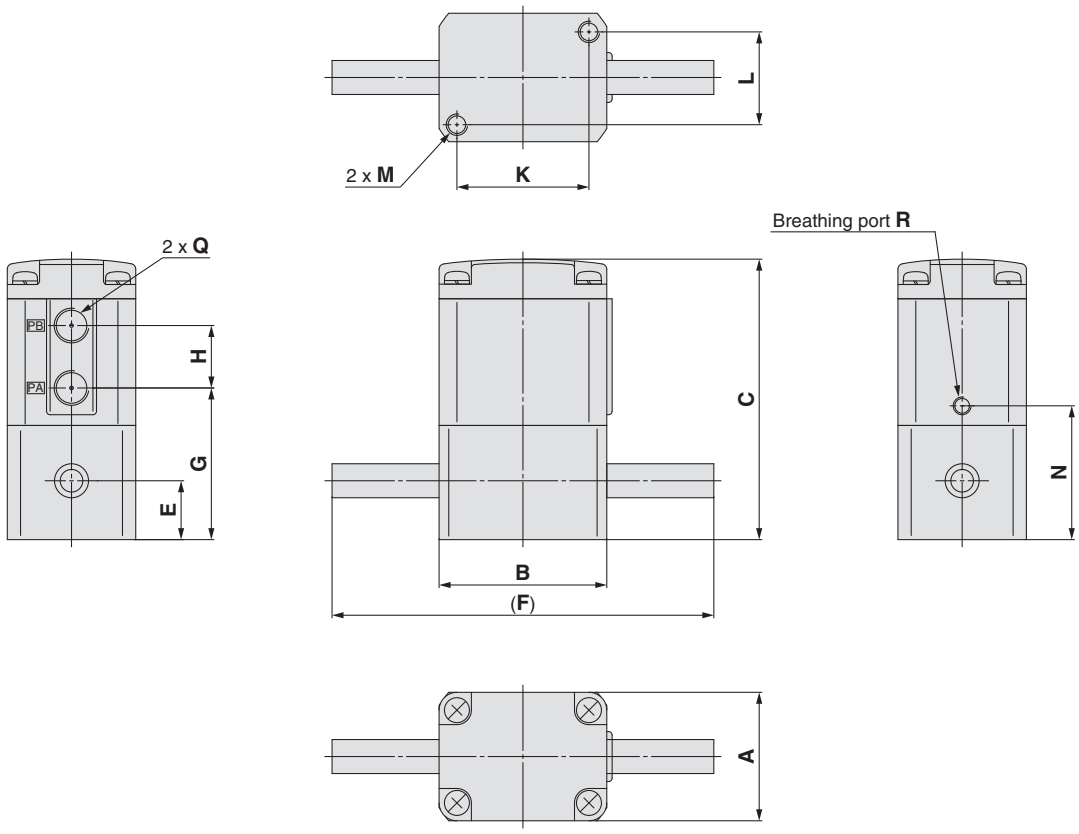

With indicator

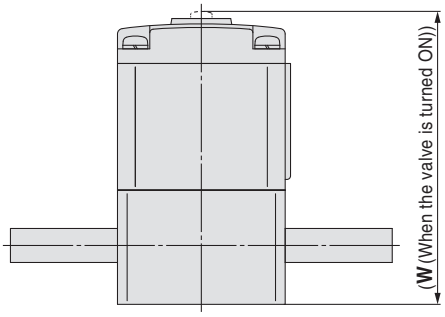

With flow rate adjustment

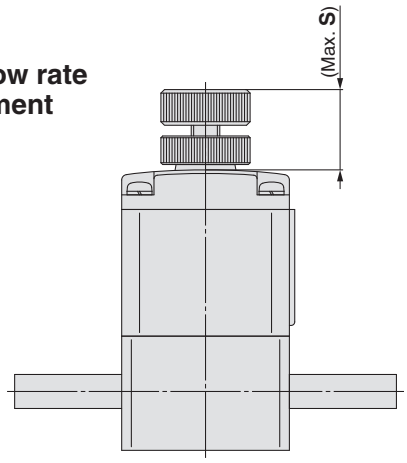

Dimensions [mm]

Model	A	B	C	E	F	G	H	K	L	M	N	Q	R	S	W
LVA2□-T□-$^{AD}_{ND}$	30	30	54.5	12	70	30.5	13	22	22	M5 x 0.8 Thread depth 5	25.5	M5 x 0.8	M3 x 0.5	17.1	58.4
LVA3□-T□-$^{AD}_{ND}$	36	47	78.6	16.5	107	42.5	17.5	37	26	M6 x 1 Thread depth 8	37.5	Rc1/8 NPT1/8	M5 x 0.8	24.9	82.1
LVA4□-T□-$^{AD}_{ND}$	46	60	85.9	16.5	120	48	18	47.5	33.5	M8 x 1.25 Thread depth 10	40	Rc1/8 NPT1/8	M5 x 0.8	30	89.9
LVA5□-T19-$^{AD}_{ND}$	58	75	120	23	155	62	27.5	60	43	M8 x 1.25 Thread depth 10	55	Rc1/8 NPT1/8	M5 x 0.8	36.1	125.5
LVA6□-T25-$^{AD}_{ND}$	58	75	129	27	155	71	27.5	60	43	M8 x 1.25 Thread depth 10	64	Rc1/8 NPT1/8	M5 x 0.8	36.1	136

Manually Operated
Integrated Fitting Type/Threaded Type
LVH Series

How to Order Valve (Single Type)

Integrated fitting type: LVH 2 0 □ – S 06 □

Threaded type: LVH 2 0 □ – 02 □ – A

Body class

Symbol	Body class	Orifice dia.
2	2	Ø 4
3	3	Ø 8
4	4	Ø 10

LQ2 integrated fitting

Port B (OUT) different dia. size

Symbol	Application
—	Ports A & B same size
Refer to the applicable tubing table on the right.	Different diameter tubing can be selected within the same body class.

Applicable tubing size

Symbol	Connecting tubing size	Body class 2	3	4
Metric size				
03	3 x 2	●		
04	4 x 3	●		
06	6 x 4	○	●	
08	8 x 6		●	
10	10 x 8		○	●
12	12 x 10			○
Inch size				
03	1/8" x 0.086"	●		
05	3/16" x 1/8"	●		
07	1/4" x 5/32"	○	●	
11	3/8" x 1/4"		○	●
13	1/2" x 3/8"			○

○ Basic size ● With reducer

*: Refer to page 56 for details of the applicable tubing sizes.

Body class

Symbol	Body class	Orifice dia.
2	2	Ø 4
3	3	Ø 8
4	4	Ø 12

Valve type

0	N.C.

Lever operation

Symbol	Type
—	Non-locking (self-reset)
L	Locking

Port size

Symbol	Port size	Body class
01	1/8	2
02	1/4	
02	1/4	3
03	3/8	
03	3/8	4
04	1/2	

Material *1

Symbol	Body	Actuator section / End plate	Diaphragm
A	Stainless steel	PP	PTFE
		—	
B	PPS	PP	PTFE
		PPS	
C	PFA	PP	PTFE
		PPS	

*1: Refer to Variations for port size and material combinations.

Pilot port thread type

Symbol	Thread type
—	Rc
N	NPT
F	G

Integrated Fitting Type Variations

Type	Symbol	Model	LVH20	LVH30	LVH40
		Orifice diameter	Ø 4	Ø 8	Ø 10
		Tubing O.D. Metric	3, 4, 6	6, 8, 10	10, 12
		Tubing O.D. Inch	1/8, 3/16, 1/4	1/4, 3/8	3/8, 1/2
Basic 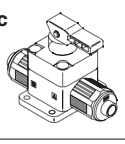	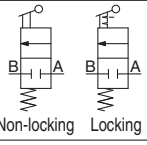 Non-locking / Locking	N.C.	○	○	○

Threaded Type Variations

Type	Symbol	Model	LVH20				LVH30				LVH40			
		Orifice diameter	Ø 4				Ø 8				Ø 12			
		Port size	1/8	1/4	1/4	1/4	1/4	3/8	3/8	3/8	3/8	1/2	1/2	1/2
		Valve type	Stainless steel 316		PPS	PFA	Stainless steel 316		PPS	PFA	Stainless steel 316		PPS	PFA
Basic 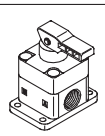	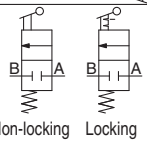 Non-locking / Locking	N.C.	○	○	○	○	○	○	○	○	○	○	○	○

⚠ Precautions

Be sure to read this before handling the products. Refer to the back cover for Safety Instructions, and pages 55 and 56 for High Purity Chemical Liquid Valve Precautions.

Piping

⚠ Caution

Integrated fitting type

1. Connect tubing with special tools.
Refer to the catalog "High-Purity Fluoropolymer Fittings Hyper Fittings/LQ1, 2 Series Work Procedure Instructions" (M-E05-1) for connecting tubing and special tools. (Downloadable from the catalogue on **www.smc.eu**)

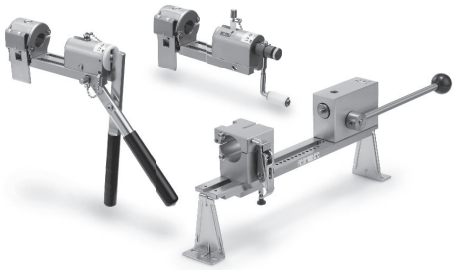

2. Tighten the nut until it touches the end surface of the body, and then tighten it an additional 1/8 turn. If the nut won't turn any further, then it means a sufficient tightening has occurred. Refer to the proper tightening torques shown below.

Tightening Torque for Piping

Body class	Torque [N·m]
2	1.5 to 2.0
3	3.0 to 3.5
4	7.5 to 9.0

Threaded type

1. Avoid using metal fittings with a resin body (taper threads).
This can cause damage to the valve body.

Standard Specifications: Integrated Fitting Type

Model		LVH20	LVH30	LVH40
Tubing O.D. *1	**Metric size**	6	10	12
	Inch size	1/4	3/8	1/2
Orifice diameter		Ø 4	Ø 8	Ø 10
Flow rate characteristics	**Kv**	0.3	1.4	2.1
	Cv	0.35	1.7	2.5
Withstand pressure [MPa]		1		
Operating pressure [MPa]	**A → B**	0 to 0.5		
	B → A	0 to 0.2		
Back pressure [MPa]		0.3 or less		
Valve leakage [cm³/min]		0 (with water pressure)		
Action		Toggle type (non-locking/locking)		
Fluid temperature [°C]		0 to 60		
Ambient temperature [°C]		0 to 60		
Weight [kg]		0.06	0.14	0.26

*1: Refer to page 56 for details of the applicable tubing sizes.

Different Diameter Tubing Applicable with Reducer

Different diameter tubing can be selected (within a body class) by using a nut and insert bushing (reducer).

● With reducer

Body class	Tubing O.D.										
	Metric size						Inch size				
	3	4	6	8	10	12	1/8	3/16	1/4	3/8	1/2
2	●	●	○	—	—	—	●	●	○	—	—
3	—	—	●	●	○	—	—	—	●	○	—
4	—	—	—	—	●	○	—	—	—	●	○

*: Refer to page 53 for information on changing tubing sizes.

Standard Specifications: Threaded Type

Model		LVH20	LVH30	LVH40
Port size		1/8, 1/4	1/4, 3/8	3/8, 1/2
Orifice diameter		Ø 4	Ø 8	Ø 12
Flow rate characteristics	**Kv**	0.3	1.4	2.1
	Cv	0.35	1.7	2.5
Withstand pressure [MPa]		1		
Operating pressure [MPa]	**A → B**	0 to 0.5		
	B → A	0 to 0.2		
Back pressure [MPa]		0.3 or less		
Valve leakage [cm³/min]		0 (with water pressure)		
Action		Toggle type (non-locking/locking)		
Fluid temperature [°C]		0 to 60		
Ambient temperature [°C]		0 to 60		
Weight [kg]	**Stainless steel**	0.15	0.36	0.71
	PPS	0.04	0.09	0.17
	PFA	0.05	0.11	0.20

Construction

Integrated fitting type

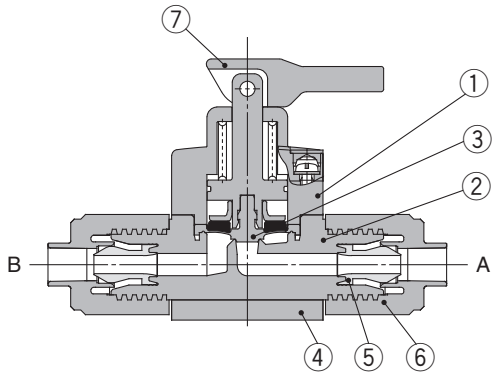

Threaded type

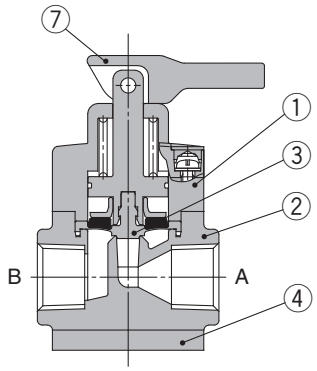

With reducer

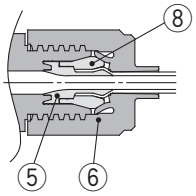

Component Parts

No.	Description	Material	Note
1	**Actuator section**	PP	–
2	**Body**	PFA	Integrated fitting type
		Stainless steel	Threaded type
		PPS	
		PFA	
3	**Diaphragm**	PTFE	–
4	**End plate**	PPS	PFA body only
5	**Insert bushing**	PFA	–
6	**Nut**	PFA	–
7	**Lever**	PP	–
8	**Collar**	PFA	–

Dimensions: Integrated Fitting Type

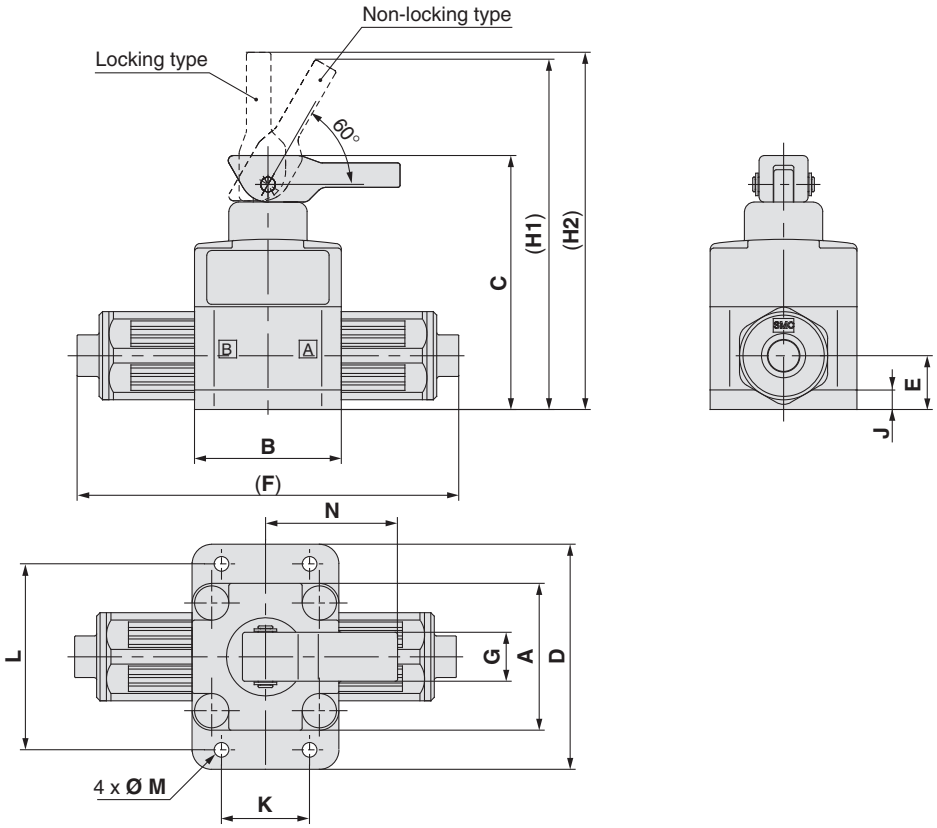

Dimensions

[mm]

Model	A	B	C	D	E	F	G	H1	H2	J	K	L	M	N
LVH20□	30	30	52	44	11	79	10	72.5	74	4	20	37	3.5	27
LVH30□	36	47	81.5	56	16.5	106	19	111	113	7.5	34	46	5.5	37.5
LVH40□	46	60	100	68	22.5	131	20.5	139	143	8	42	57	5.5	50

Dimensions: Threaded Type

Body material: Stainless steel

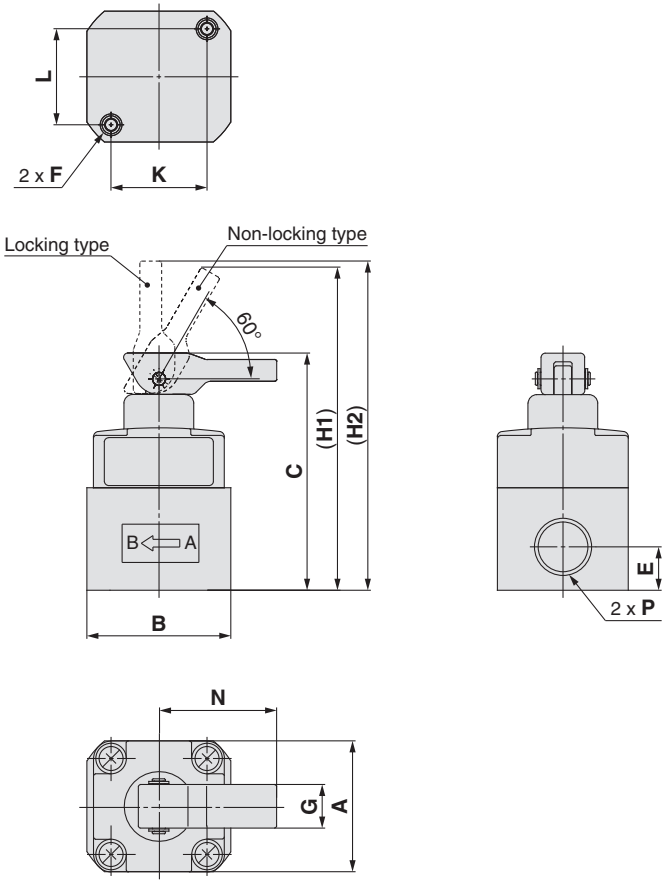

Body material: PPS

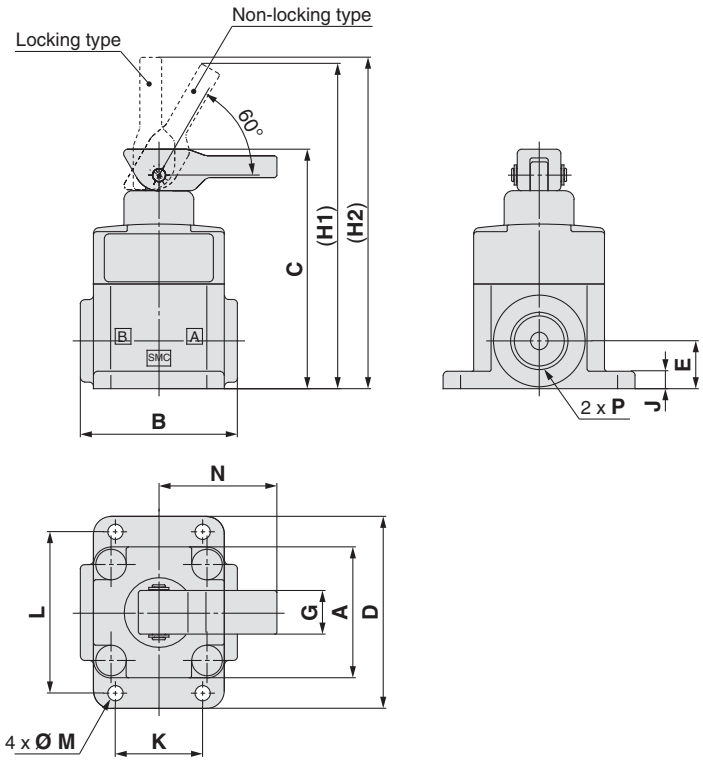

Dimensions: Threaded Type

Body material: PFA

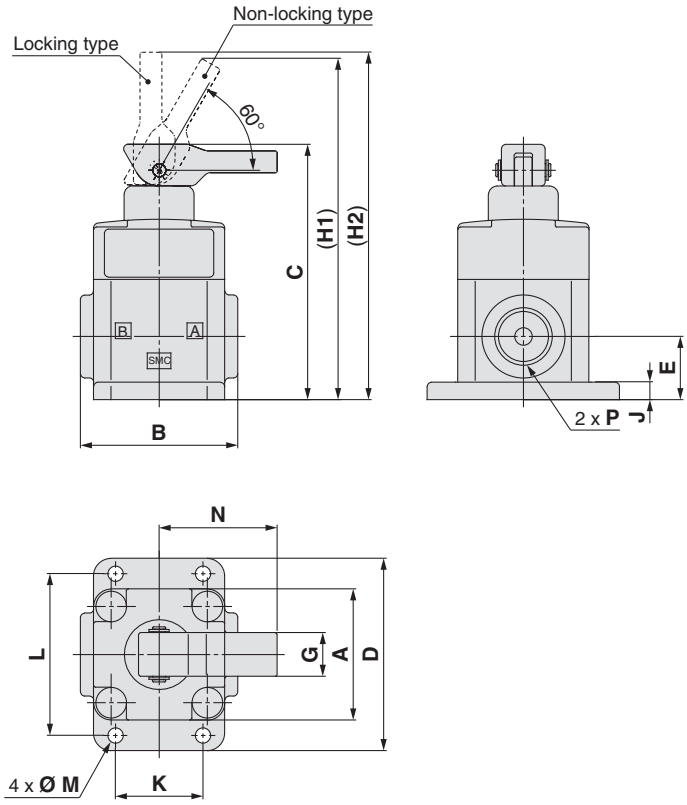

Dimensions

[mm]

Body material	Model	A	B	C	D	E	F	G	H1	H2	J	K	L	M	N	P
Stainless steel	**LVH20□**	30	33	54.5	—	10	M5 x 0.8	10	75	76.5	—	22	22	—	27	Rc1/8, 1/4, NPT1/8, 1/4, G1/8, 1/4
	LVH30□	36	47	81	—	13	M6 x 1	19	110.5	112.5	—	37	26	—	37	Rc1/4, 3/8, NPT1/4, 3/8, G1/4, 3/8
	LVH40□	46	60	99	—	16	M8 x 1.25	20.5	138	142	—	47.5	33.5	—	50	Rc3/8, 1/2, NPT3/8, 1/2, G3/8, 1/2
PPS	**LVH20□**	30	36	55	44	11	—	10	75.5	77	4	20	37	3.5	27	Rc1/4, NPT1/4, G1/4
	LVH30□	36	47	80	56	15	—	19	109.5	111.5	7.5	34	46	5.5	37	Rc3/8, NPT3/8, G3/8
	LVH40□	46	60	99.5	68	22	—	20.5	138.5	142.5	8	42	57	5.5	50	Rc1/2, NPT1/2, G1/2
PFA	**LVH20□**	30	36	58.5	44	14.5	—	10	79	80.5	4	20	37	3.5	27	Rc1/4, NPT1/4, G1/4
	LVH30□	36	47	84	56	19	—	19	113.5	115.5	7.5	34	46	5.5	37	Rc3/8, NPT3/8, G3/8
	LVH40□	46	60	99.5	68	22	—	20.5	138.5	142.5	8	42	57	5.5	50	Rc1/2, NPT1/2, G1/2

LVH Series Integrated Fitting Type Manifolds

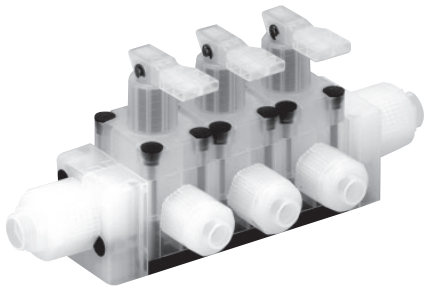

Manifold Specifications

Model	LLH2A	LLH3A	LLH4A
Manifold type	Stacking		
P (IN), A (OUT) type	Common IN/Individual OUT		
Valve stations	2 to 5 stations		
Tubing size *1 **(port P)**	3/8" x 1/4"	1/2" x 3/8"	3/4" x 5/8"
Tubing size (port A)	1/4" x 5/32"	3/8" x 1/4"	1/2" x 3/8"

*1: Refer to page 56 for details of the applicable tubing sizes.
*: Please contact SMC if the manifold will be used with A → P flow.

How to Order Manifold Base

LLH 2 A – 05 – S 11 ☐

Body class

Symbol	Body class
2	2
3	3
4	4

Base type

A	Stacking

Manifold stations

02	2 stations
⋮	⋮
05	5 stations

LQ2 integrated fitting

Tubing size for port P and L side connection *1

Symbol	Tubing size	Fittings	Body class
00	Plug	—	2 to 4
06	6 x 4	3	2
07	1/4" x 5/32"		
08	8 x 6		
10	10 x 8		
11	3/8" x 1/4"		
10	10 x 8	4	3
11	3/8" x 1/4"		
12	12 x 10		
13	1/2" x 3/8"		
12	12 x 10	5	4
13	1/2" x 3/8"		
19	19 x 16, 3/4" x 5/8"		

*1: Refer to page 56 for details of the applicable tubing sizes.
*: Port P fitting of the manifold base is one size bigger than the body class. When ordering plug only, refer to Blanking plug (LQ series) in the catalogue on **www.smc.eu** after checking the fitting size.

Tubing size for port P and R side connection *1

Symbol	Tubing size	Fittings	Body class
—	L side, R side same size		
00	Plug	—	2 to 4
06	6 x 4	3	2
07	1/4" x 5/32"		
08	8 x 6		
10	10 x 8		
11	3/8" x 1/4"		
10	10 x 8	4	3
11	3/8" x 1/4"		
12	12 x 10		
13	1/2" x 3/8"		
12	12 x 10	5	4
13	1/2" x 3/8"		
19	19 x 16, 3/4" x 5/8"		

*1: Refer to page 56 for details of the applicable tubing sizes.
*: Port P fitting of the manifold base is one size bigger than the body class. When ordering plug only, refer to Blanking plug (LQ series) in the catalogue on **www.smc.eu** after checking the fitting size.

How to Order Valve

LVH 2 0 A ☐ – S 07

It is not possible to order single unit valves for the manifold. For details, refer to Maintenance 4. in the High Purity Chemical Liquid Valve Precautions 2 on page 56.

Body class

Symbol	Body class	Orifice dia.
2	2	Ø 4
3	3	Ø 8
4	4	Ø 10

Valve type

0	N.C.

Body type

A	Stacking type for manifold

Lever operation

Symbol	Type
—	Non-locking (self-reset)
L	Locking

LQ2 integrated fitting

Tubing size

Symbol	Tubing size	Body class
03	Ø 3, 1/8"	2
04	Ø 4	
05	3/16"	
06	Ø 6	
07	1/4"	
06	Ø 6	3
07	1/4"	
08	Ø 8	
10	Ø 10	
11	3/8"	
10	Ø 10	4
11	3/8"	
12	Ø 12	
13	1/2"	

How to Order Manifold Assembly (Example)

Enter the part number of the valves to be mounted together with the manifold base part number.

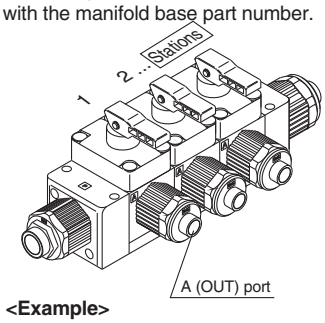

Stations are counted from station 1 on the left side, with the A (OUT) ports in front.

<Example>

LLH2A-03-S11 ····· 1 set Manifold base part no.

∗ LVH20A-S07 ····· 2 sets Valve part no. (Stations 1 & 2)

∗ LVH20AL-S07 ····· 1 set Valve part no. (Station 3)

• Prefix the asterisk to the part no. of the valves, etc.

Enter together in order counting from station 1 on the left side, with the A (OUT) ports in front.

Integrated Fitting Type Manifold Variations

Type	Symbol	Model	LVH20	LVH30	LVH40
		Manifold material	PFA		
		Tubing size	1/4	3/8	1/2
		Orifice diameter / Valve type	Ø 4	Ø 8	Ø 10
Manifold 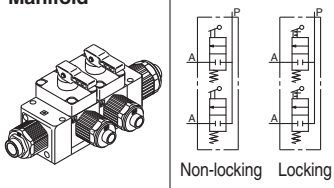	Non-locking / Locking	N.C.	○	○	○

Construction

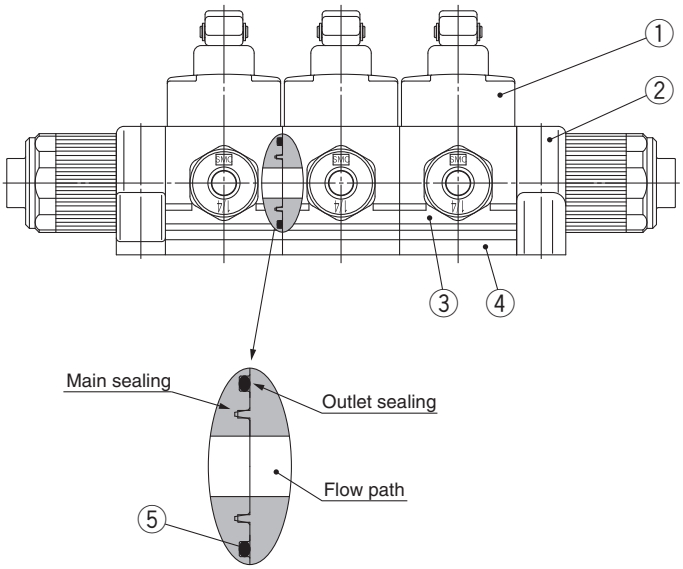

Manifold body connection

Component Parts

No.	Description	Material
1	**Actuator section**	PP
2	**Manifold**	PFA
3	**Body**	PFA
4	**End plate**	PPS
5	**O-ring**	FKM

Dimensions

LLH□A- Stations -□□

Size 2

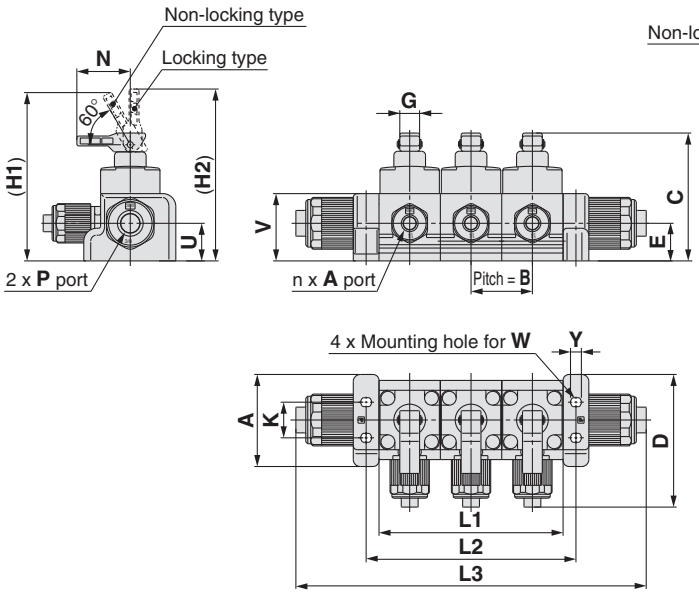

Size 3, 4

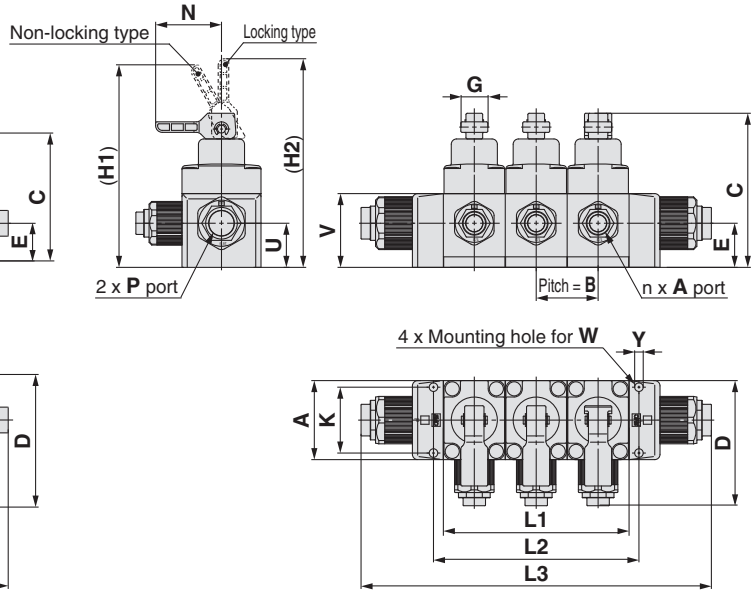

Dimensions [mm]

Model	A	B	C	D	E	G	H1	H2	K	N	U	V	W	Y
LLH2A	46.5	31	65	67	19	10	85.5	87	18	27	19	34	M4	5.5
LLH3A	47	36.5	94.5	76	27.5	19	125.5	127.5	39	37	27.5	47	M5	6.5
LLH4A	60	47	115	95	33.5	20.5	154	158	50	50	33.5	56	M6	7.5

[mm]

Model	Station / Symbol	2	3	4	5
LLH2A	**L1**	62	93	124	155
	L2	75	106	137	168
	L3	146	177	208	239
LLH3A	**L1**	73	109.5	146	182.5
	L2	84	120.5	157	193.5
	L3	183	219.5	256	292.5
LLH4A	**L1**	94	141	188	235
	L2	109	156	203	250
	L3	219	266	313	360

LVH Series Threaded Type
Manifolds

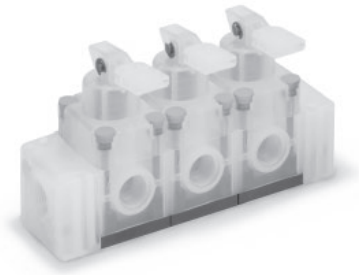

Manifold Specifications

Model	LLH2A	LLH3A	LLH4A
Manifold type	Stacking		
P (IN), A (OUT) type	Common IN/Individual OUT		
Valve stations	2 to 5 stations		
Port size (port P)	1/4	3/8	1/2
Port size (port A)	1/4	3/8	1/2

∗: Please contact SMC if the manifold will be used with flow A → P.

How to Order Manifold Base

LLH 2 A – 05 – 02 ☐ – C

Body class

Symbol	Body class
2	2
3	3
4	4

Base type

A	Stacking

Manifold stations

02	2 stations
⋮	⋮
05	5 stations

Port size (port P)

Symbol	Port size	Body class
02	1/4	2
03	3/8	3
04	1/2	4

Thread type

Symbol	Thread type
—	Rc
N	NPT

Material

Symbol	Manifold
C	PFA

How to Order Valve

Threaded type

LVH 2 0 A ☐ – 02 ☐ – C

It is not possible to order single unit valves for the manifold. For details, refer to Maintenance 4. in the High Purity Chemical Liquid Valve Precautions 2 on page 56.

Body class

Symbol	Body class	Orifice dia.
2	2	Ø 4
3	3	Ø 8
4	4	Ø 12

Valve type

0	N.C.

Body type

A	Stacking type for manifold

Lever operation

Symbol	Type
—	Non-locking (self-reset)
L	Locking

Port size (port A)

Symbol	Port size	Body class
02	1/4	2
03	3/8	3
04	1/2	4

Thread type

Symbol	Thread type
—	Rc
N	NPT

Material

Symbol	Body	Actuator section / End plate	Diaphragm
C	PFA	PP	PTFE
		PPS	

How to Order Manifold Assembly (Example)

Enter the part number of the valves to be mounted together with the manifold base part number.

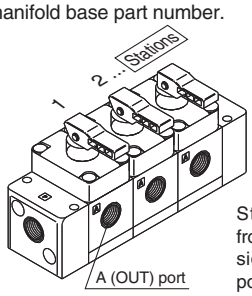

Stations are counted from station 1 on the left side, with the A (OUT) ports in front.

<Example>

LLH2A-03-02-C ····· 1 set **Manifold base part no.**

∗ LVH20A-02-C ····· 2 sets **Valve part no. (Stations 1 & 2)**

∗ LVH20AL-02-C ····· 1 set **Valve part no. (Station 3)**

• Prefix the asterisk to the part no. of the valves, etc.

Enter together in order counting from station 1 on the left side, with the A (OUT) ports in front.

Threaded Type Manifold Variations

Type	Symbol	Model	LVH20	LVH30	LVH40
		Manifold material	PFA		
		Port size	1/4	3/8	1/2
		Orifice diameter / Valve type	Ø 4	Ø 8	Ø 12
Manifold 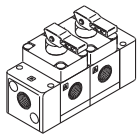	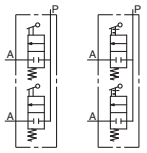 Non-locking Locking	N.C.	○	○	○

Construction

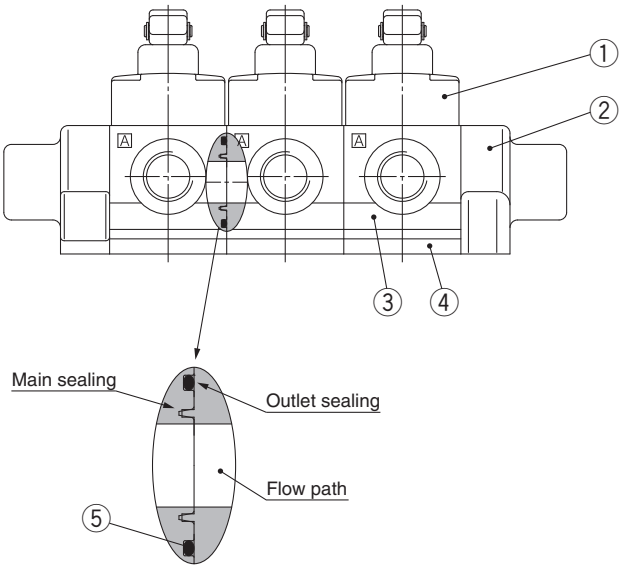

Manifold body connection

Component Parts

No.	Description	Material
1	**Actuator section**	PP
2	**Manifold**	PFA
3	**Body**	PFA
4	**End plate**	PPS
5	**O-ring**	FKM

Dimensions

LLH□A- Stations -□□-C

Size 2

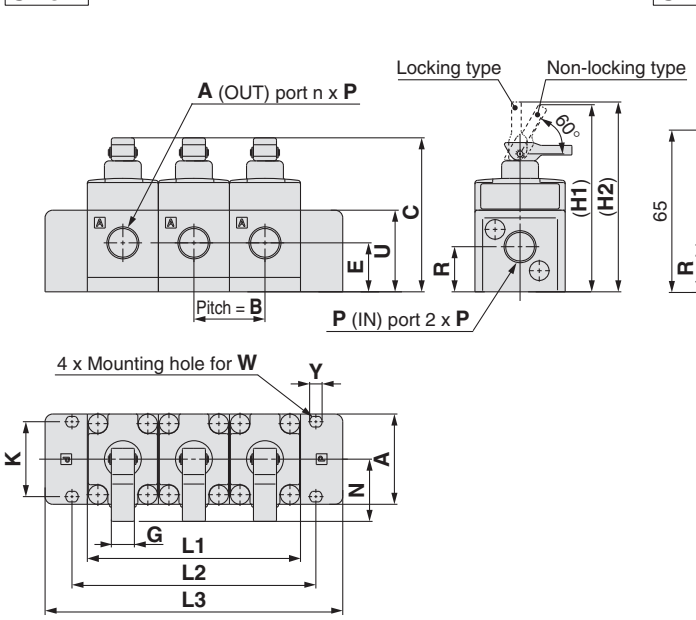

Size 3, 4

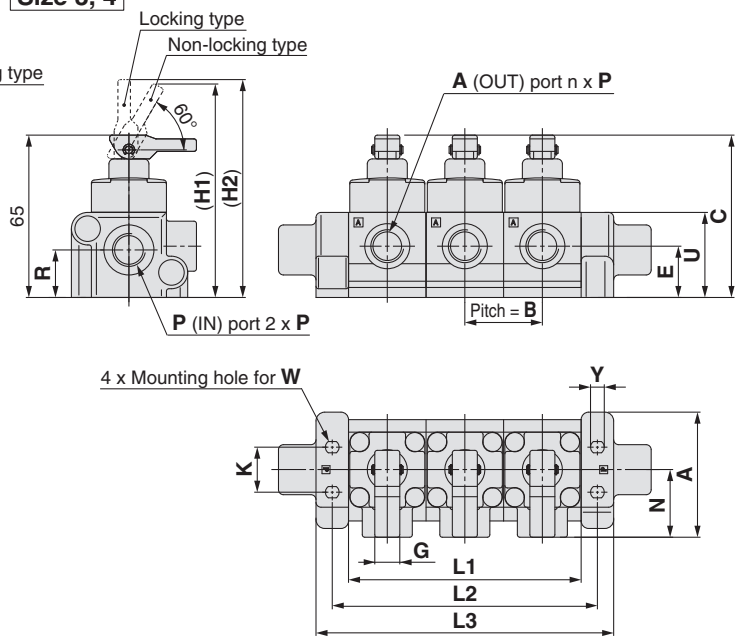

Dimensions

[mm]

Model	A	B	C	E	G	H1	H2	K	N	P	R	U	W	Y
LLH2A	50	31	65	20.5	10	85.5	87	18	27	Rc1/4, NPT1/4	19	34	M4	5.5
LLH3A	47	37	90	25.5	19	112.5	114.5	39	37	Rc3/8, NPT3/8	23.5	42.5	M5	6.5
LLH4A	60	47	107	29	20.5	146	150	50	50	Rc1/2, NPT1/2	24	48	M6	7.5

[mm]

Model	Station / Symbol	2	3	4	5
LLH2A	**L1**	62	93	124	155
	L2	75	106	137	168
	L3	118	149	180	211
LLH3A	**L1**	74	111	148	185
	L2	90	127	164	201
	L3	118	155	192	229
LLH4A	**L1**	94	141	188	235
	L2	112	159	206	253
	L3	144	191	238	285

Manually Operated, Organic Solvents Compatible Double Ferrule Fittings/Metal Gasket Seal Fittings/Integrated Tubing

LVH□M Series

How to Order Valve

LVH 2 0M – D 07 – AD – □

Body class

Symbol	Body class	Orifice dia.
2	2	Ø 4
3	3	Ø 8
4	4	Ø 12
5	5	Ø 20
6	6	Ø 22

Fitting type

Symbol	Type
D	With double ferrule fittings
G	With metal gasket seal fittings
T	Integrated tubing

Applicable tubing size

Symbol	Connecting tubing size	Body class 2	3	4	5	6
Metric size						
06	Ø 6	○				
10	Ø 10		○			
12	Ø 12			○		
19	Ø 19				○	
Inch size						
07	1/4	○				
11	3/8		○			
13	1/2			○		
19	3/4				○	
25	1					○

∗: Metric size is only available for fitting types D and T.

Material

Symbol	Body	Actuator section	Diaphragm	Seal	Buffer
AD	Stainless steel	ADC	PTFE	FKM	FKM
ND				EPDM	EPDM

Option

—	None
E	Body wetted parts equivalent to EP grade

LVH20M-D07-AD
Double ferrule fittings

Standard Specifications

Model		LVH20M	LVH30M	LVH40M	LVH50M	LVH60M
Tubing O.D.	Metric size∗1	6	10	12	19	—
	Inch size	1/4	3/8	1/2	3/4	1
Orifice diameter		Ø 4	Ø 8	Ø 12	Ø 20	Ø 22
Flow rate characteristics	Kv	0.3	1.4	2.8	5.1	6.8
	Cv	0.35	1.7	3.3	6	8
Withstand pressure [MPa]		1				
Operating pressure [MPa] <A → B flow>		0 to 0.5				
Valve leakage [cm³/min]		0 (with water pressure)				
Fluid temperature [°C]		0 to 100				
Ambient temperature [°C]		0 to 60				
Fitting type		With double ferrule fittings, With metal gasket seal fittings, Integrated tubing				

∗1: Metric size is only available for fitting types D and T.

Dimensions

Body material: Stainless steel
With double ferrule fittings

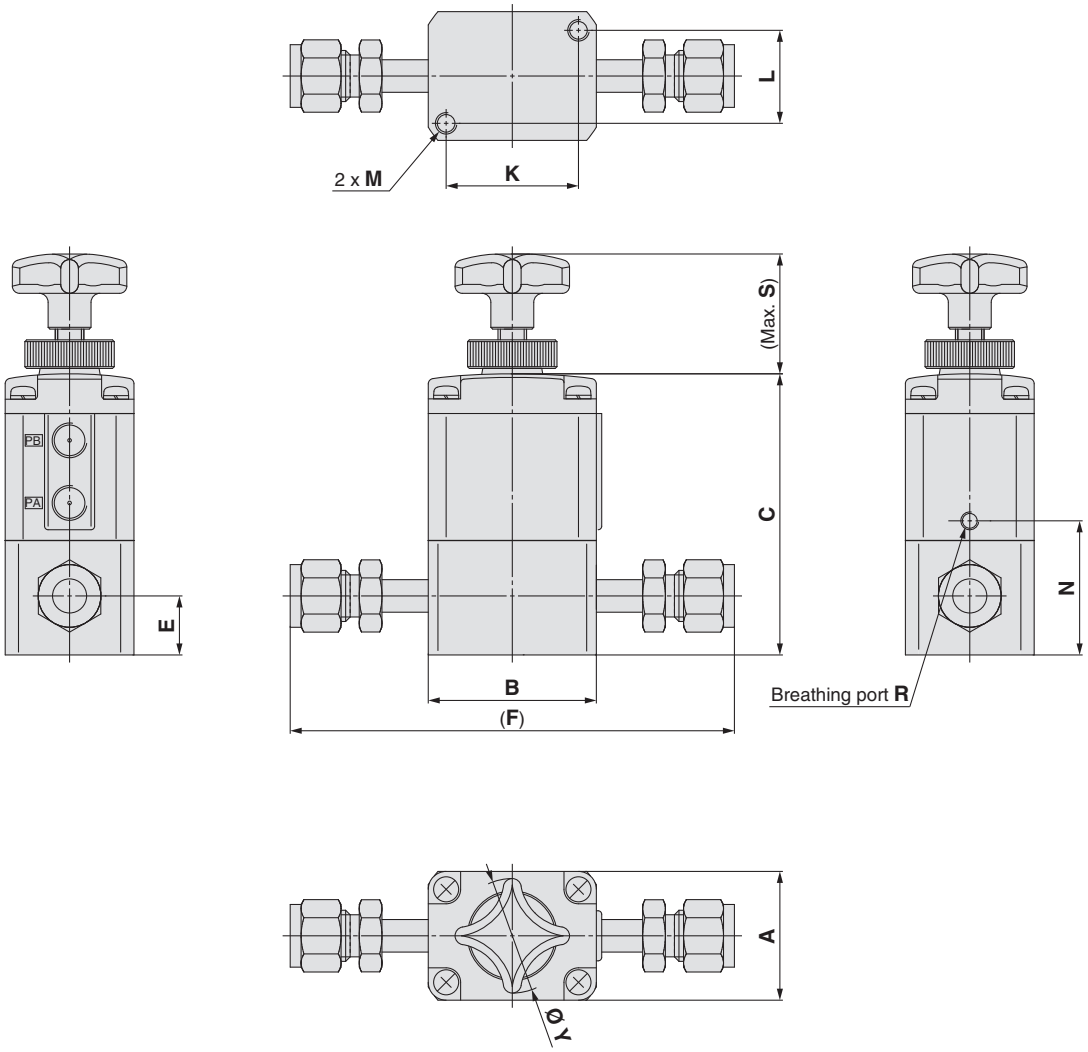

Dimensions [mm]

Model	A	B	C	E	F	K	L	M	N	R	S	Y
LVH20M-D□-AD/ND	30	30	54.5	12	96.4	22	22	M5 x 0.8 Thread depth 5	25.5	M3 x 0.5	31.1	32
LVH30M-D□-AD/ND	36	47	78.6	16.5	127	37	26	M6 x 1 Thread depth 8	37.5	M5 x 0.8	35.9	32
LVH40M-D□-AD/ND	46	60	85.9	16.5	147.2	47.5	33.5	M8 x 1.25 Thread depth 10	40	M5 x 0.8	44	40
LVH50M-D19-AD/ND	58	75	120	23	166.8	60	43	M8 x 1.25 Thread depth 10	55	M5 x 0.8	55.1	50
LVH60M-D25-AD/ND	58	75	129	27	190.2	60	43	M8 x 1.25 Thread depth 10	64	M5 x 0.8	55.1	50

Dimensions

Body material: Stainless steel
With metal gasket seal fittings

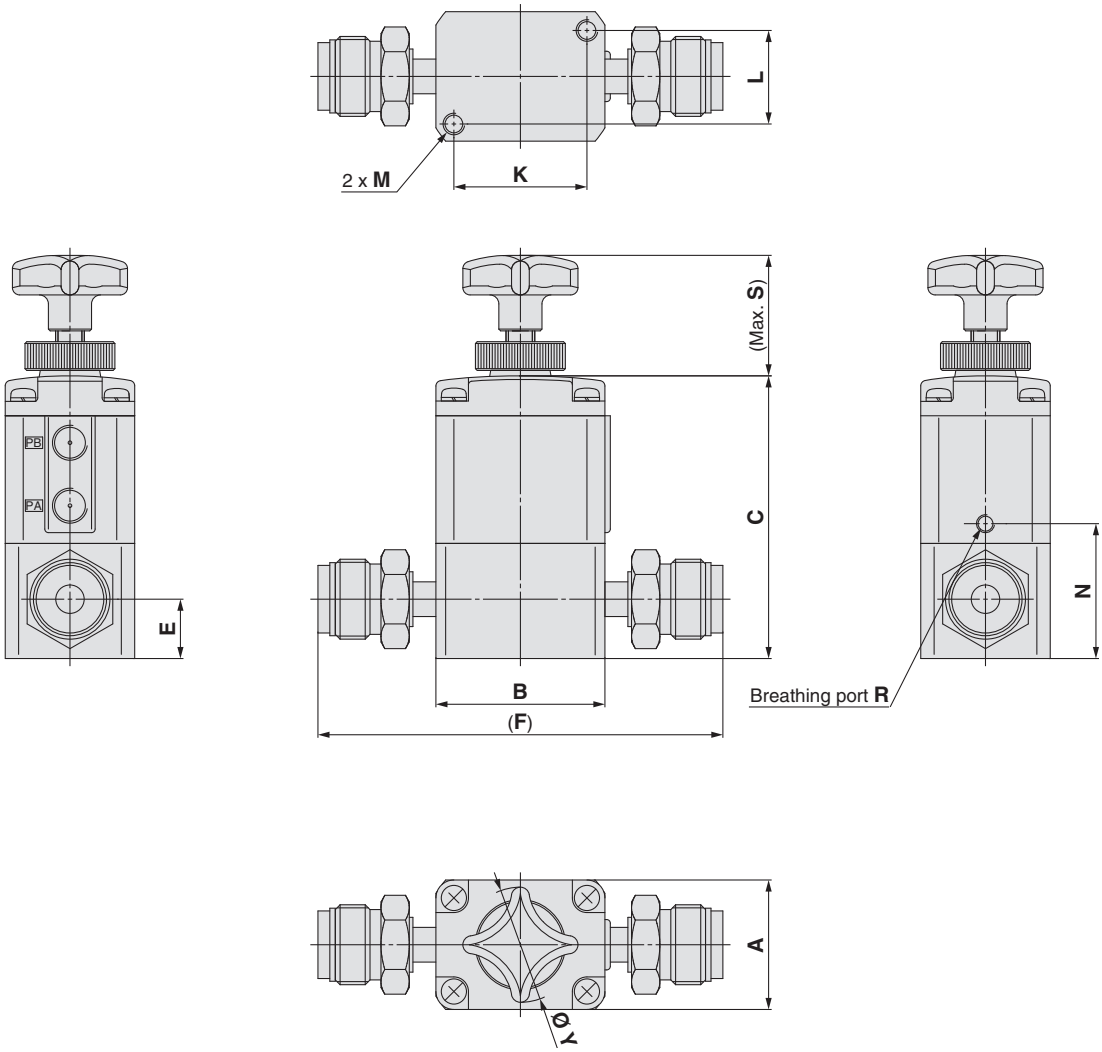

Dimensions [mm]

Mode	A	B	C	E	F	K	L	M	N	R	S	Y
LVH20M-G07-AD/ND	30	30	54.5	12	91	22	22	M5 x 0.8 Thread depth 5	25.5	M3 x 0.5	31.1	32
LVH30M-G11-AD/ND	36	47	78.6	16.5	112.6	37	26	M6 x 1 Thread depth 8	37.5	M5 x 0.8	35.9	32
LVH40M-G13-AD/ND	46	60	85.9	16.5	131.6	47.5	33.5	M8 x 1.25 Thread depth 10	40	M5 x 0.8	44	40
LVH50M-G19-AD/ND	58	75	120	23	178.2	60	43	M8 x 1.25 Thread depth 10	55	M5 x 0.8	55.1	50
LVH60M-G25-AD/ND	58	75	129	27	192.8	60	43	M8 x 1.25 Thread depth 10	64	M5 x 0.8	55.1	50

Dimensions

Body material: Stainless steel
Integrated tubing

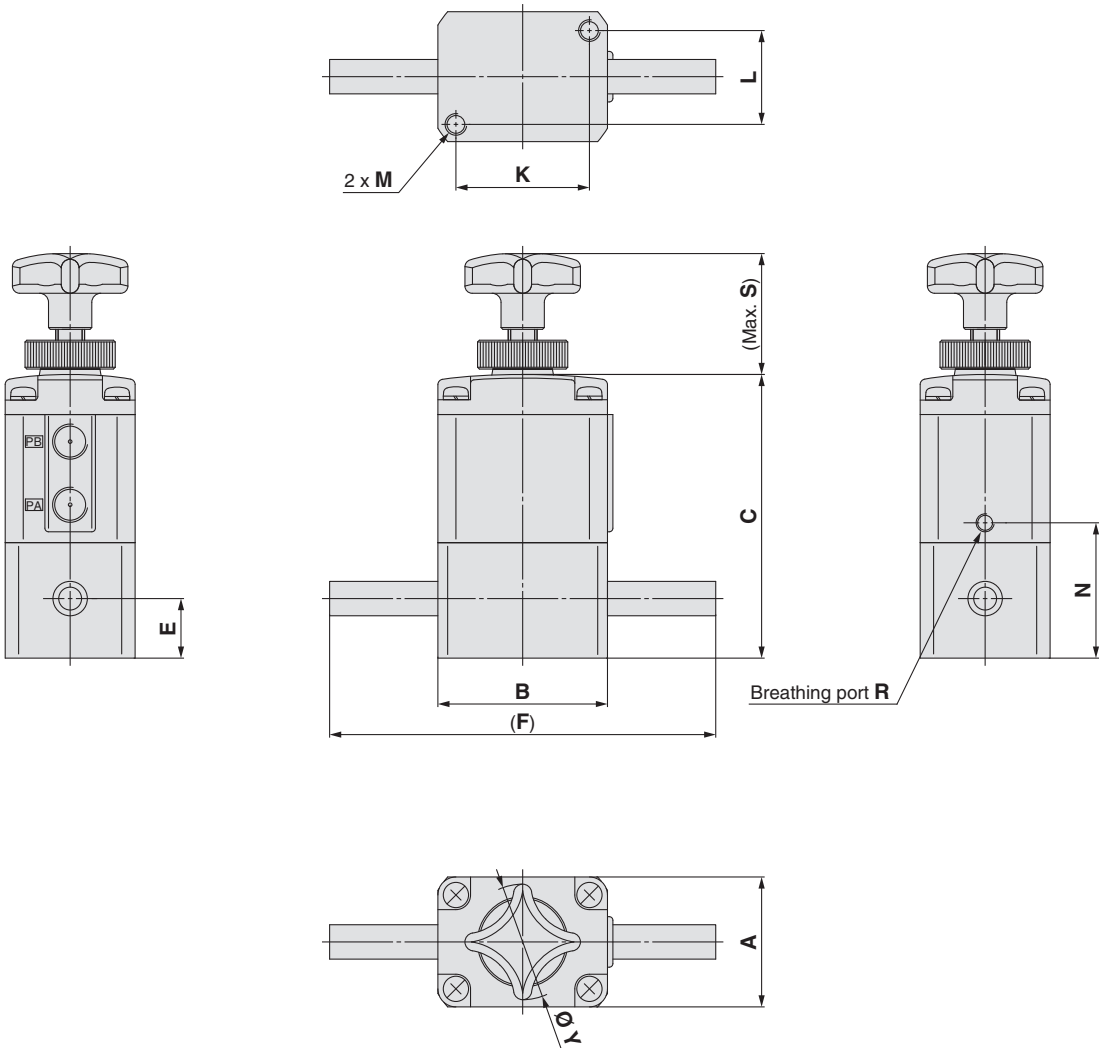

Dimensions [mm]

Model	A	B	C	E	F	K	L	M	N	R	S	Y
LVH20M-T□-AD/ND	30	30	54.5	12	70	22	22	M5 x 0.8 Thread depth 5	25.5	M3 x 0.5	31.1	32
LVH30M-T□-AD/ND	36	47	78.6	16.5	107	37	26	M6 x 1 Thread depth 8	37.5	M5 x 0.8	35.9	32
LVH40M-T□-AD/ND	46	60	85.9	16.5	120	47.5	33.5	M8 x 1.25 Thread depth 10	40	M5 x 0.8	44	40
LVH50M-T19-AD/ND	58	75	120	23	155	60	43	M8 x 1.25 Thread depth 10	55	M5 x 0.8	55.1	50
LVH60M-T25-AD/ND	58	75	129	27	155	60	43	M8 x 1.25 Thread depth 10	64	M5 x 0.8	55.1	50

LV□ Series
Fittings and Special Tools

Fittings

Changing Tubing Sizes

The tubing size can be changed within the same body class (body size) by replacing the nut and insert bushing.

Body class	Tubing O.D.														
	Metric size								Inch size						
	3	4	6	8	10	12	19	25	1/8	3/16	1/4	3/8	1/2	3/4	1
2	●	●	○	—	—	—	—	—	●	●	○	—	—	—	—
3	—	—	●	●	○	—	—	—	—	—	●	○	—	—	—
4	—	—	—	—	●	○	—	—	—	—	—	●	○	—	—
5	—	—	—	—	—	●	○	—	—	—	—	—	●	○	—
6	—	—	—	—	—	—	●	○	—	—	—	—	—	●	○

Part Components

	Component parts		
	Nut	Insert	Collar (insert assembly)
○ Basic size	Yes	Yes	No
● Reducer type	Yes	Yes	Yes

⚠ Caution

1. Connect tubing with special tools.
Refer to the operation manual "High-Purity Fluoropolymer Fittings Hyper Fittings/LQ1, 2 Series Work Procedure Instructions" (M-E05-1) for connecting tubing and special tools.
(Downloadable from the catalogue on **www.smc.eu**).

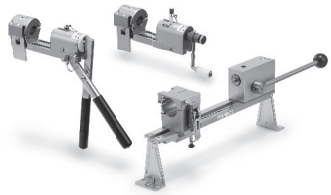

Changing the tubing size

Example) Changing the tubing from an O.D. 1/4" to O.D. 1/8" in body class 2.

Prepare an insert bushing and nut for 1/8" O.D. tubing (LQ-2U03) and change the tubing size. (Refer to How to Order Fitting Parts.)

∗: Tubing is sold separately.

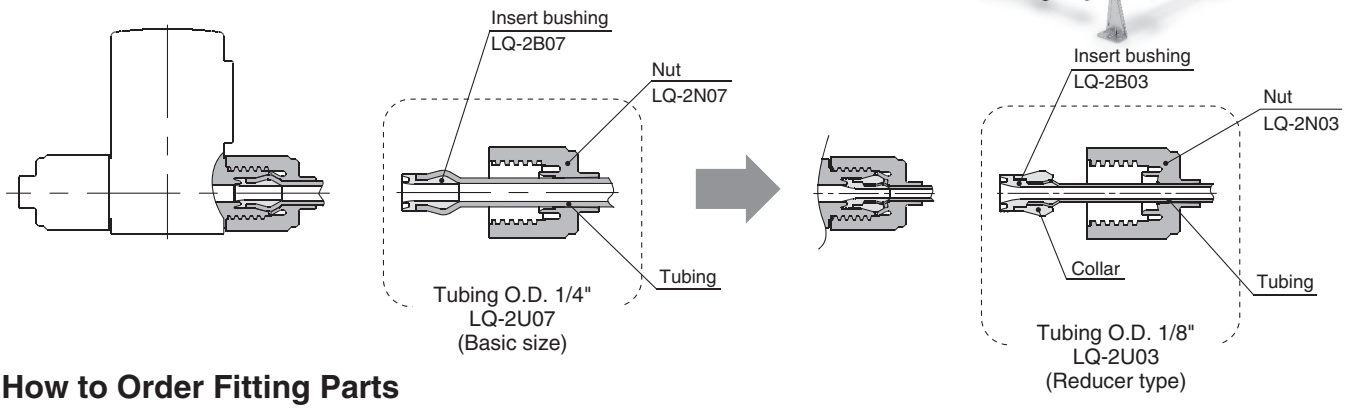

How to Order Fitting Parts

LQ □ – 2 U 03

∗: Type U is recommended when changing tubing sizes.

Fitting type

Symbol	Applicable fitting
—	LQ2
1	LQ1

Body class (fittings)

Symbol	Body class (fittings)	Applicable fitting
2	2	LQ1 LQ2
3	3	
4	4	
5	5	
6	6	LQ1

Part type

Symbol	Type
U	Insert bushing & nut
B	Insert bushing
N	Nut

Tubing size∗1

Symbol	Tubing size	Body class (fittings)	Applicable fitting
03	1/8" x 0.086", 3 x 2	2	LQ1 LQ2
04	4 x 3		
05	3/16" x 1/8"		
06	6 x 4		
07	1/4" x 5/32"		
06	6 x 4	3	
08	8 x 6		
10	10 x 8		
07	1/4" x 5/32"		
11	3/8" x 1/4"		
10	10 x 8	4	
12	12 x 10		
11	3/8" x 1/4"		
13	1/2" x 3/8"		
12	12 x 10	5	
13	1/2" x 3/8"		
19	3/4" x 5/8", 19 x 16		
19	3/4" x 5/8", 19 x 16	6	LQ1
25	1" x 7/8", 25 x 22		

∗1: Refer to page 56 for details of the applicable tubing sizes.

LV□ Series
Applicable Fluids

High Purity Air and Manually Operated Chemical Liquid Valves
Material and Fluid Compatibility Check List

Chemicals	Body material			Diaphragm material		
	Stainless steel 316	Fluoro resin PFA	Polyphenylene sulfide resin PPS	Fluoro resin PTFE	Nitrile rubber NBR	Ethylene propylene rubber EPR
Acetone	○	○ *1	○ *1	○ *2	×	×
Ammonium hydroxide	○	○	○	○ *2	×	×
Isobutyl alcohol	○	○ *1	○ *1	○ *2	○	○
Isopropyl alcohol	○	○ *1	○ *1	○ *2	○	○
Hydrochloric acid	×	○	○	○	×	×
Ozone (dry)	○	○	○	○	×	○
Hydrogen peroxide Concentration 5 % or less, 50 °C or less	×	○	○	○	×	×
Ethyl acetate	○	○ *1	○ *1	○ *2	×	×
Butyl acetate	○	○ *1	○ *1	○ *2	×	×
Nitric acid (except fuming nitric acid) Concentration 10 % or less	×	○	○	○ *2	×	×
DI water (deionized water)	○	○	○	○	×	○
Sodium hydroxide (caustic soda) Concentration 50 % or less	○	○	○	○	×	×
Nitrogen gas	○	○	○	○	○	○
Ultrapure water	×	○	○ *3	○	×	×
Toluene	○	○ *1	○ *1	○ *2	×	×
Hydrofluoric acid	×	○	×	○ *2	×	×
Sulfuric acid (except fuming sulfuric acid)	×	○	×	○ *2	×	×
Phosphoric acid Concentration 80 % or less	×	○	×	○	×	×

The material and fluid compatibility check list provides reference values as a guide only.
*1: Use a stainless steel body, as static electricity may be generated.
*2: Use caution as permeation may occur. The permeated fluid may effect the parts of other materials.
*3: This product has corrosion resistance. However, due to the elution of components, the preservation of the purity level of ultrapure water cannot be guaranteed.

Table symbols
○ : Can be used.
○ : Can be used under certain conditions.
× : Cannot be used.

- Compatibility is indicated for fluid temperatures of 100 °C or less.
- The material and fluid compatibility check list provides reference values as a guide only, therefore we do not guarantee the application to our product.
- The data above is based on the information presented by the material manufacturers.
- SMC is not responsible for its accuracy and any damage happened because of this data.
- Set the viscosity of a fluid to 300 cp or less.
  If a fluid with a high viscosity is used, this may cause inadequate closing of the valve.

LV□ Series
High Purity Chemical Liquid Valve Precautions 1

Be sure to read this before handling the products.
Refer to the back cover for Safety Instructions.

Design / Selection

⚠ Warning

1. Check the specifications.

Give careful consideration to operating conditions such as the application, fluid and environment, and use within the operating ranges specified in this catalogue.

2. Fluids

Operate after confirming the compatibility of the product's component materials with fluids, using the check list on page 54. Please contact SMC regarding fluids other than those in the check list. Operate within the indicated fluid temperature range.

3. Maintenance space

Ensure the necessary space for maintenance and inspections.

4. Fluid pressure range

Keep the supplied fluid pressure within the operating pressure range shown in the catalogue.

5. Ambient environment

Install in an environment where there is no effect from radiant heat caused by heat sources, etc., and use within the ambient temperature range. After confirming the compatibility of the product's component materials with the ambient environment, operate so that fluid does not adhere to the product's exterior surfaces.

6. Liquid seals

When circulating fluid:

Provide a relief valve in the system so that fluid does not get into the liquid seal circuit.

7. Countermeasures for static electricity

Since static electricity may be generated depending on the fluid being used, implement suitable countermeasures.

Mounting

⚠ Warning

1. If air leakage increases or equipment does not operate properly, stop operation.

After mounting, perform suitable function and leak tests to confirm that the mounting is correct.

2. Operation Manual

Mount and operate the product after reading the manual carefully and understanding its contents. Also, keep the manual where it can be referred to as necessary.

Piping

⚠ Caution

1. Preparation before piping

Before piping is connected, it should be thoroughly flushed out with air or washed to remove chips, cutting oil and other debris from inside the pipe.

Install piping so that it does not apply pulling, pressing, bending or other forces on the valve body.

2. Use the tightening torques shown below for the pilot port.

Tightening Torque for Operating Port

Operating port	Torque [N·m]
M5	1/6 turn with a tightening tool after first tightening by hand
Rc, NPT1/8	0.8 to 1.0

Piping

⚠ Caution

3. Use of metal fittings

Do not use metal fittings for piping on taper threads made of resin, as this may cause damage to the threads.

LVA PPS Body Ported Tightening Torque for Fittings

Size	Breaking torque [N·m]	Tightening torque [N·m]	Guideline for tightening torque (Number of turns)
LVA20	2 to 3	0.5 to 1	2 to 3 turns
LVA30	6 to 8	2 to 3	3 to 4 turns
LVA40	11 to 14	5 to 7	3 to 4 turns
LVA50	18 to 20	8 to 10	3 to 4 turns

∗: Guideline for tightening torque
Number of turns when the fitting is screwed into the body with 2 to 3 windings of sealant tape applied to threaded portion of the piping. The value may differ for types other than sealant type.

4. Use pilot ports and sensor (breathing) ports as indicated below.

	PA port	PB port	Sensor (breathing) port
N.C.	Pressure	Breathing	Breathing
N.O.	Breathing	Pressure	Breathing
Double acting	Pressure	Pressure	Breathing

For N.C. and N.O. types, the port which does not receive operating pressure is released to atmosphere. When intake and exhaust directly from the valve is not desired due to problems with the ambient environment or scattering of dust, etc., install piping and perform intake and exhaust at a location which does not present a problem.

5. Connect tubing with special tools.

Refer to the operation manual "High-Purity Fluoropolymer Fittings Hyper Fittings/LQ1, 2 Series Work Procedure Instructions" (M-E05-1) for connecting tubing and special tools. (Downloadable from the catalogue on **www.smc.eu**).

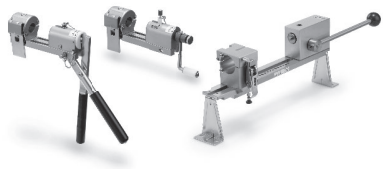

6. SMC's G threads and thread depths

Body material: Stainless steel [mm]

	P	Q	R
LVA1	G1/8: 6.2 G1/4: 9.4	—	—
LVA20		G1/8: 6.2	—
LVA21/22		—	—
LVA3	G1/4: 9.4 G3/8: 9.7	G1/8: 6.2	G1/8: 6.2
LVA4	G3/8: 9.7 G1/2: 13		
LVA5	G1/2: 13 G3/4: 14.5		
LVA6	G1: 16.2		

Body material: PPS [mm]

	P	Q	R
LVA1	G1/8: 6.2 G1/4: 9.4	—	—
LVA20	G1/4: 9.4	G1/8: 6.2	—
LVA21/22		—	—
LVA3	G3/8: 9.7	G1/8: 6.2	G1/8: 6.2
LVA4	G1/2: 13		
LVA5	G3/4: 14.5		

Body material: PFA [mm]

	P	R	U
LVA1	G1/8: 6.2 G1/4: 9.4	—	—
LVA20	G1/4: 9.4	G1/8: 6.2	—
LVA21/22		—	—
LVA3	G3/8: 9.7	G1/8: 6.2	G1/8: 6.2
LVA4	G1/2: 13		
LVA5	G3/4: 14.5		
LVA6	G1: 16.2		

LV□ Series
High Purity Chemical Liquid Valve Precautions 2

Be sure to read this before handling the products.
Refer to the back cover for Safety Instructions.

Operating Air Supply

⚠ Warning

1. Use clean air.

Do not use compressed air which includes chemicals, synthetic oils containing organic solvents, salt, or corrosive gases, etc., as this may cause damage or malfunction.

Operating Environment

⚠ Warning

1. Do not use in a location having an explosive atmosphere.

2. Do not operate in locations where vibration or impact occurs.

3. Do not use in locations where radiated heat will be received from nearby heat sources.

4. Do not use in environments which exceed the ambient temperature specifications of the product.

Maintenance

⚠ Warning

1. Maintenance should be performed in accordance with the procedures in the Operation Manual.

Incorrect handling can cause damage or malfunction of machinery and equipment, etc.

2. Before removing equipment or compressed air supply/exhaust devices, shut off the air and power supplies, and exhaust compressed air from the system.
Further, when restarting equipment after remounting or replacement, first confirm safety and then check the equipment for normal operation.

3. Perform work after removing residual chemicals and carefully replacing them with DI water (Deionised water) or air, etc.

4. Do not disassemble the product. Products which have been disassembled cannot be guaranteed.

If disassembly is necessary, please contact SMC.

5. In order to obtain optimum performance from valves, perform periodic inspections to confirm that there are no leaks from valves or fittings, etc.

⚠ Caution

1. Removal of drainage

Flush drainage from filters regularly.

Handling

⚠ Warning

1. Operate within the ranges of the maximum operating pressure and back pressure.

Handling

⚠ Caution

1. When the diaphragm is made of PTFE

Please note that when the product is shipped from the factory, gases such as N_2 and air may leak from the valve at a rate of 1 cm^3/min (when pressurised).

2. When operated at a very low flow rate, the LV□ series with flow rate adjustment may vibrate, etc. depending on the operating conditions. Therefore, operate it after careful examination of the flow rate, pressure and piping conditions.

3. In the LV□ series, water hammering may occur depending on the fluid pressure conditions. In most cases, improvement is possible by adjusting the pilot pressure with a speed controller, etc., but the flow rate, pressure and piping conditions should be reviewed.

4. To adjust the flow rate for the LV□ series with flow rate adjustment, open gradually starting from the fully closed state.
Opening is accomplished by turning the adjustment knob counterclockwise. Additionally, do not apply excessive force to the adjustment knob when nearing a fully open or closed state. This may result in deformation of the orifice sheet surface or damage to the threaded portion of the adjustment knob. It is in the fully closed state when the product is shipped from the factory.

5. After a long period of nonuse, perform a test run before beginning regular operation.

6. Since the LVC is packaged in a clean room, use sufficient care in handling when opened.

7. Take extra care when setting the operating direction and when handling the lever of the LVH series.

Use of Tubing

⚠ Caution

1. Refer to the applicable tubing sizes shown below for tubing to be used.

Applicable Tubing Sizes

	Connecting tubing size	O.D. [mm]		Internal thickness [mm]	
		Standard size	Tolerance	Standard size	Tolerance
Metric size	Ø 3 x Ø 2	3.0	+0.2 −0.1	0.5	±0.06
	Ø 4 x Ø 3	4.0			
	Ø 6 x Ø 4	6.0		1.0	±0.1
	Ø 8 x Ø 6	8.0			
	Ø 10 x Ø 8	10.0			
	Ø 12 x Ø 10	12.0			
	Ø 19 x Ø 16	19.0	+0.3 −0.1	1.5	±0.15
	Ø 25 x Ø 22	25.0			
Inch size	1/8" x 0.086"	3.18	+0.2 −0.1	0.5	±0.1
	3/16" x 1/8"	4.75		0.8	
	1/4" x 5/32"	6.35		1.2	±0.12
	3/8" x 1/4"	9.53		1.6	±0.15
	1/2" x 3/8"	12.7			
	3/4" x 5/8"	19.0	+0.3 −0.1		
	1" x 7/8"	25.4			

Return of Product

⚠ Warning

If the product to be returned is contaminated or is possibly contaminated with substances that are harmful to humans, for safety reasons, please contact SMC beforehand and then employ a specialist cleaning company to decontaminate the product. After the decontamination prescribed above has been carried out, submit a Product Return Request Sheet or the Detoxification/Decontamination Certificate to SMC and await SMC's approval and further instructions before attempting to return the item.
Please refer to the International Chemical Safety Cards (ICSC) for a list of harmful substances.
If you have any further questions, please don't hesitate to contact your SMC sales representative.

⚠ Safety Instructions

These safety instructions are intended to prevent hazardous situations and/or equipment damage. These instructions indicate the level of potential hazard with the labels of **"Caution," "Warning"** or **"Danger."** They are all important notes for safety and must be followed in addition to International Standards (ISO/IEC) [1], and other safety regulations.

⚠ **Caution:**	**Caution** indicates a hazard with a low level of risk which, if not avoided, could result in minor or moderate injury.
⚠ **Warning:**	**Warning** indicates a hazard with a medium level of risk which, if not avoided, could result in death or serious injury.
⚠ **Danger:**	**Danger** indicates a hazard with a high level of risk which, if not avoided, will result in death or serious injury.

1) ISO 4414: Pneumatic fluid power – General rules relating to systems.
ISO 4413: Hydraulic fluid power – General rules relating to systems.
IEC 60204-1: Safety of machinery – Electrical equipment of machines. (Part 1: General requirements)
ISO 10218-1: Manipulating industrial robots - Safety.
etc.

⚠ Warning

1. **The compatibility of the product is the responsibility of the person who designs the equipment or decides its specifications.**
   Since the product specified here is used under various operating conditions, its compatibility with specific equipment must be decided by the person who designs the equipment or decides its specifications based on necessary analysis and test results. The expected performance and safety assurance of the equipment will be the responsibility of the person who has determined its compatibility with the product. This person should also continuously review all specifications of the product referring to its latest catalogue information, with a view to giving due consideration to any possibility of equipment failure when configuring the equipment.
2. **Only personnel with appropriate training should operate machinery and equipment.**
   The product specified here may become unsafe if handled incorrectly. The assembly, operation and maintenance of machines or equipment including our products must be performed by an operator who is appropriately trained and experienced.
3. **Do not service or attempt to remove product and machinery/equipment until safety is confirmed.**
   1. The inspection and maintenance of machinery/equipment should only be performed after measures to prevent falling or runaway of the driven objects have been confirmed.
   2. When the product is to be removed, confirm that the safety measures as mentioned above are implemented and the power from any appropriate source is cut, and read and understand the specific product precautions of all relevant products carefully.
   3. Before machinery/equipment is restarted, take measures to prevent unexpected operation and malfunction.
4. **Contact SMC beforehand and take special consideration of safety measures if the product is to be used in any of the following conditions.**
   1. Conditions and environments outside of the given specifications, or use outdoors or in a place exposed to direct sunlight.
   2. Installation on equipment in conjunction with atomic energy, railways, air navigation, space, shipping, vehicles, military, medical treatment, combustion and recreation, or equipment in contact with food and beverages, emergency stop circuits, clutch and brake circuits in press applications, safety equipment or other applications unsuitable for the standard specifications described in the product catalogue.
   3. An application which could have negative effects on people, property, or animals requiring special safety analysis.
   4. Use in an interlock circuit, which requires the provision of double interlock for possible failure by using a mechanical protective function, and periodical checks to confirm proper operation.

⚠ Caution

1. **The product is provided for use in manufacturing industries.**
   The product herein described is basically provided for peaceful use in manufacturing industries.
   If considering using the product in other industries, consult SMC beforehand and exchange specifications or a contract if necessary.
   If anything is unclear, contact your nearest sales branch.

Limited warranty and Disclaimer/Compliance Requirements

The product used is subject to the following "Limited warranty and Disclaimer" and "Compliance Requirements".Read and accept them before using the product.

Limited warranty and Disclaimer

1. The warranty period of the product is 1 year in service or 1.5 years after the product is delivered, whichever is first. [2] Also, the product may have specified durability, running distance or replacement parts. Please consult your nearest sales branch.
2. For any failure or damage reported within the warranty period which is clearly our responsibility, a replacement product or necessary parts will be provided. This limited warranty applies only to our product independently, and not to any other damage incurred due to the failure of the product.
3. Prior to using SMC products, please read and understand the warranty terms and disclaimers noted in the specified catalogue for the particular products.

2) Vacuum pads are excluded from this 1 year warranty.
A vacuum pad is a consumable part, so it is warranted for a year after it is delivered. Also, even within the warranty period, the wear of a product due to the use of the vacuum pad or failure due to the deterioration of rubber material are not covered by the limited warranty.

Compliance Requirements

1. The use of SMC products with production equipment for the manufacture of weapons of mass destruction (WMD) or any other weapon is strictly prohibited.
2. The exports of SMC products or technology from one country to another are governed by the relevant security laws and regulations of the countries involved in the transaction. Prior to the shipment of a SMC product to another country, assure that all local rules governing that export are known and followed.

⚠ Caution

SMC products are not intended for use as instruments for legal metrology.
Measurement instruments that SMC manufactures or sells have not been qualified by type approval tests relevant to the metrology (measurement) laws of each country.
Therefore, SMC products cannot be used for business or certification ordained by the metrology (measurement) laws of each country.

SMC Corporation (Europe)

Austria	+43 (0)2262622800	www.smc.at	office@smc.at
Belgium	+32 (0)33551464	www.smc.be	info@smc.be
Bulgaria	+359 (0)2807670	www.smc.bg	office@smc.bg
Croatia	+385 (0)13707288	www.smc.hr	office@smc.hr
Czech Republic	+420 541424611	www.smc.cz	office@smc.cz
Denmark	+45 70252900	www.smcdk.com	smc@smcdk.com
Estonia	+372 6510370	www.smcpneumatics.ee	smc@info@smcee.ee
Finland	+358 207513513	www.smc.fi	smcfi@smc.fi
France	+33 (0)164761000	www.smc-france.fr	info@smc-france.fr
Germany	+49 (0)61034020	www.smc.de	info@smc.de
Greece	+30 210 2717265	www.smchellas.gr	sales@smchellas.gr
Hungary	+36 23513000	www.smc.hu	office@smc.hu
Ireland	+353 (0)14039000	www.smcautomation.ie	sales@smcautomation.ie
Italy	+39 03990691	www.smcitalia.it	mailbox@smcitalia.it
Latvia	+371 67817700	www.smc.lv	info@smc.lv
Lithuania	+370 5 2308118	www.smclt.lt	info@smclt.lt
Netherlands	+31 (0)205318888	www.smc.nl	info@smc.nl
Norway	+47 67129020	www.smc-norge.no	post@smc-norge.no
Poland	+48 222119600	www.smc.pl	office@smc.pl
Portugal	+351 214724500	www.smc.eu	apoioclientept@smc.smces.es
Romania	+40 213205111	www.smcromania.ro	smcromania@smcromania.ro
Russia	+7 (812)3036600	www.smc.eu	sales@smcru.com
Slovakia	+421 (0)413213212	www.smc.sk	office@smc.sk
Slovenia	+386 (0)73885412	www.smc.si	office@smc.si
Spain	+34 945184100	www.smc.eu	post@smc.smces.es
Sweden	+46 (0)86031240	www.smc.nu	smc@smc.nu
Switzerland	+41 (0)523963131	www.smc.ch	info@smc.ch
Turkey	+90 212 489 0 440	www.smcpnomatik.com.tr	info@smcpnomatik.com.tr
UK	+44 (0)845 121 5122	www.smc.uk	sales@smc.uk
South Africa	+27 10 900 1233	www.smcza.co.za	zasales@smcza.co.za

Printing ZT 00 Printed in Spain

Specifications are subject to change without prior notice and any obligation on the part of the manufacturer