REV.	ECN NO.	DATE	SIGN	DESCRIPTION
D	C231341	2023/10/23	JC Chen	D XI
E	C240093	2024/01/19	JC Chen	E XI
F	C240111	2024/01/22	Zhiwei Xie	F XI

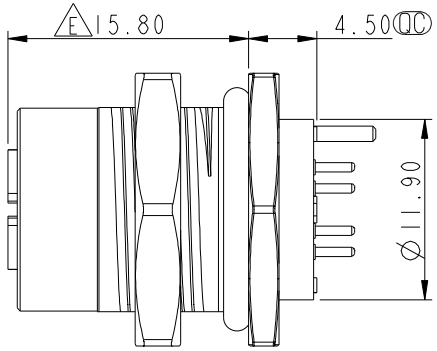

MSXS-XXPFFP-SF7002

XX: No.Of Pin

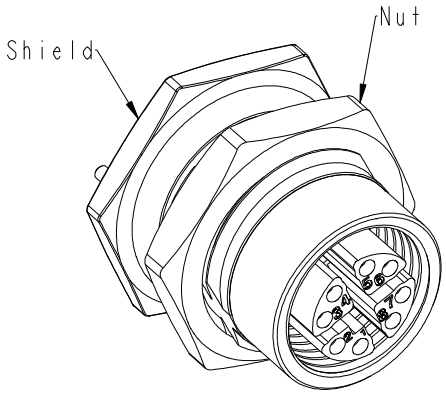

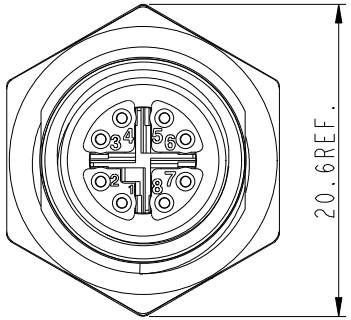

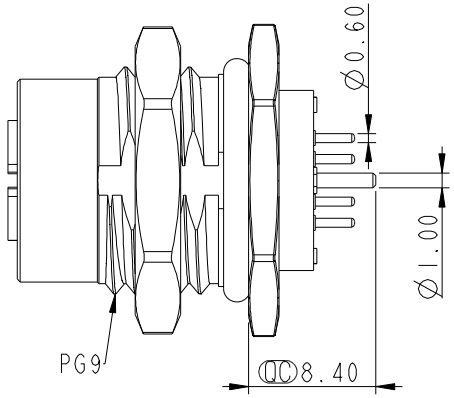

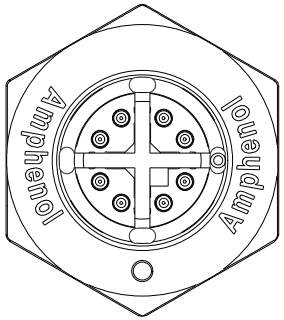

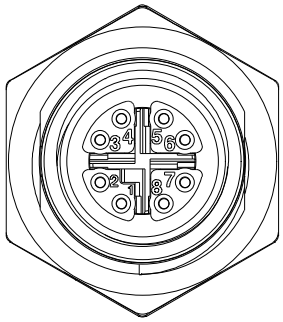

Conn.
Pin Assignment
Front View

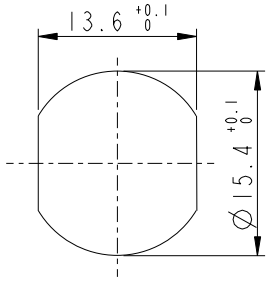

Recommended
Panel Cut-out

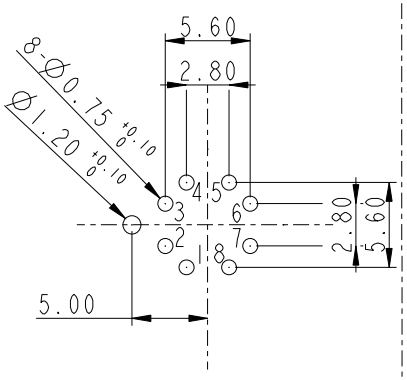

Recommended PCB.Layout

D Note:
* QC Important Dimension To Check.
* Waterproof Rate: IP67, Unmated.
* Connector: Thermoplastic, Black.
* Female Pin: Copper Alloy, Gold Plated.
* Shield: Copper alloy, Nickel Plated.
* Screw Nut: Metal, Nickel Plated.
* O-Ring1: Rubber, Gray.
F * O-Ring2: Rubber, Black.
* For Panel Thickness Range: 2.0~3.0mm.
* For PCB Thickness Max. 1.6mm.
* Nut is packed separately in PE bag.

UNIT: mm

TOLERANCE
.X ±0.25
.XX ±0.1
.XXX ±0.05
ANGLES ±1°

TITLE: N SEN, M12 X -SHLD, SCREW RECEPTACLE, F, F, PCB S

SCALE 2:1 | SIZE A4 | SHEET 1 OF 1

REV. F | WC-REV. A.1 | QC: Inspection item

Amphenol LTW
安費諾亮泰企業股份有限公司

ITEM NO	DRAWN BY Zhiwei Xie	DATE 2024/01/2
DWG NO MSXS-XXPFFP-SF7002	CHECKED BY Fisher Wang	DATE 2024/01/2
CUSTOMER ALTW	APPROVED BY Fred Lee	DATE 2024/01/2

W10814-03