SIEMENS

## Data sheet 8WD4208-0DE

foot individually, plastic, for floor mounting, without pipe, accessory for signaling columns, with diameter 50 mm

| | |
|---|---|
| **product brand name** | SIRIUS |
| **product designation** | Foot for floor mounting |
| **General technical data** | |
| reference code according to EN 61346-2 | U |
| **Enclosure** | |
| **height** | 37 mm |
| **width** | 70 mm |
| **material** | PA |
| **color** | black |
| **fastening method** | floor mounting |
| **Ambient conditions** | |
| **ambient temperature during operation** | -20 ... +50 °C |

**Certificates/ approvals**

| General Product Approval | EMC | Declaration of Conformity | other |
|---|---|---|---|
| Confirmation | | | Confirmation |

**Further information**

**Siemens has decided to exit the Russian market (see here).**
https://press.siemens.com/global/en/pressrelease/siemens-wind-down-russian-business
**Siemens is working on the renewal of the current EAC certificates.**
Please contact your local Siemens office on the status of validity of the EAC certification if you intend to import or offer to supply these products to an EAC relevant market (other than the sanctioned EAEU member states Russia or Belarus).
**Information on the packaging**
https://support.industry.siemens.com/cs/ww/en/view/109813875
**Information- and Downloadcenter (Catalogs, Brochures,…)**
https://www.siemens.com/ic10
**Industry Mall (Online ordering system)**
https://mall.industry.siemens.com/mall/en/en/Catalog/product?mlfb=8WD4208-0DE
**Cax online generator**
http://support.automation.siemens.com/WW/CAXorder/default.aspx?lang=en&mlfb=8WD4208-0DE
**Service&Support (Manuals, Certificates, Characteristics, FAQs,...)**
https://support.industry.siemens.com/cs/ww/en/ps/8WD4208-0DE
**Image database (product images, 2D dimension drawings, 3D models, device circuit diagrams, EPLAN macros, ...)**
http://www.automation.siemens.com/bilddb/cax_de.aspx?mlfb=8WD4208-0DE&lang=en


Subject to change without notice
© Copyright Siemens

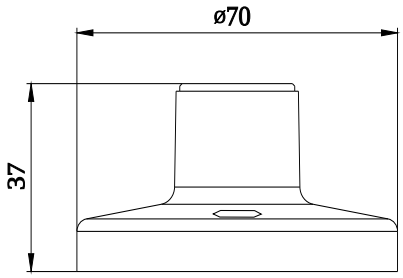


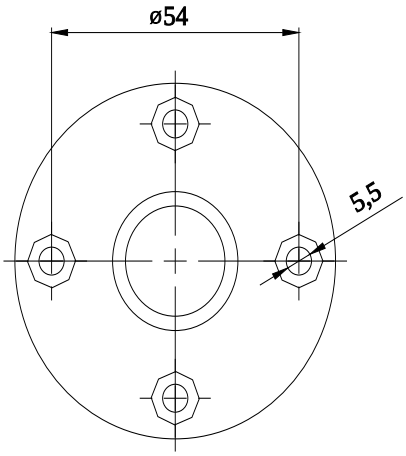


**last modified:** 12/23/2020


Subject to change without notice
© Copyright Siemens