

Image may differ from product. See technical specification for details.

22256 CCK/W33

Spherical roller bearing with tapered bore and relubrication features

Spherical roller bearings can accommodate heavy loads in both directions. They are self-aligning and accommodate misalignment and shaft deflections, with virtually no increase in friction or temperature. The design includes features to facilitate relubrication. The bearings can be used in a modular system, including housings, sleeves and nuts. Also available on request with special sized bore and/or outside diameters, suitable for reworked shafts and housings.

- Accommodate misalignment
- High load carrying capacity
- Relubrication features
- Low friction and long service life
- Increased wear resistance

Overview

Dimensions

Bore diameter	280 mm
Outside diameter	500 mm
Width	130 mm

Performance

Basic dynamic load rating	2 795 kN
Basic static load rating	3 750 kN
Reference speed	1 100 r/min
Limiting speed	1 500 r/min
SKF performance class	SKF Explorer

Properties

Number of rows	2
Locating feature, bearing outer ring	Without
Bore type	Tapered 1:12
Cage	Sheet metal
Radial internal clearance	CN
Tolerance class for dimensions	Normal
Tolerance class for run-out	P5
Sealing	Without
Lubricant	None
Relubrication feature	With
Candidate for remanufacturing	Yes
Indicative carbon footprint for new product	390 kg CO_2e
Indicative carbon footprint for remanufactured product	130 kg CO_2e

Logistics

Product net weight	105 kg
eClass code	23-05-09-11
UNSPSC code	31171510

Technical specification

Bore type	Tapered 1:12

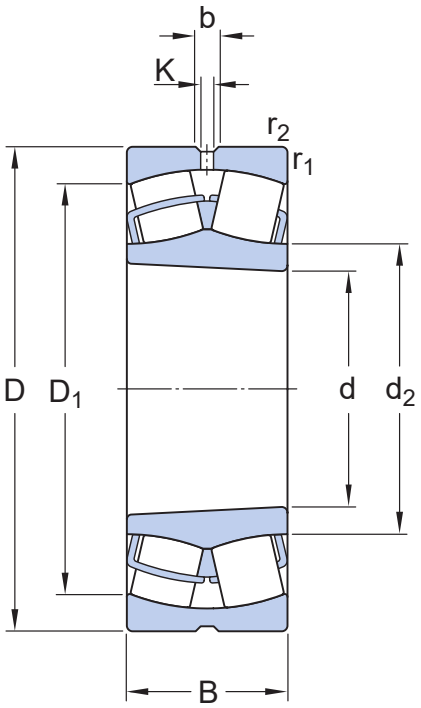

Dimensions

d	280 mm	Bore diameter
$t_{\Delta dmp}$	0 – 0.052 mm	Deviation limits of mid-range bore diameter
$t_{\Delta SL}$	0 – 0.052 mm	Deviation limits of tapered slope
D	500 mm	Outside diameter
$t_{\Delta Dmp}$	-0.045 – 0 mm	Deviation limits of mid-range outside diameter
B	130 mm	Width
$t_{\Delta Bs}$	-0.1 – 0 mm	Deviation limits of ring width
d_2	≈ 333 mm	Shoulder diameter of inner ring
D_1	≈ 441 mm	Shoulder/recess diameter of outer ring
b	22.3 mm	Width of lubrication groove
K	12 mm	Diameter of lubrication hole
$r_{1,2}$	min. 5 mm	Chamfer dimension
	Normal	ISO tolerance class for dimensions

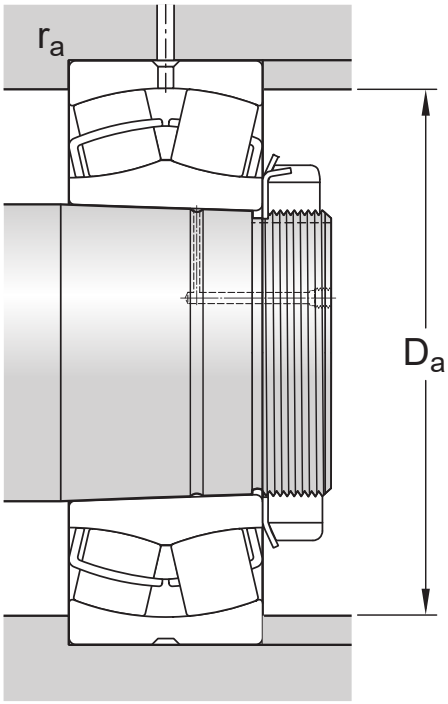

Abutment dimensions

D_a	max. 480 mm	Diameter of housing abutment
r_a	max. 4 mm	Radius of fillet

Calculation data

SKF performance class		SKF Explorer
Basic dynamic load rating	C	2 795 kN
Basic static load rating	C_0	3 750 kN
Fatigue load limit	P_u	300 kN
Reference speed		1 100 r/min
Limiting speed		1 500 r/min
Limiting value	e	0.26
Calculation factor	Y_1	2.6
Calculation factor	Y_2	3.9
Calculation factor	Y_0	2.5

Tolerances of run-out

Range of section height at inner ring of assembled bearing	t_{Kia}	13 µm

Maximum run-out of inner ring side face to the bore	t_{Sd}	13 µm
Range of section height at outer ring of assembled bearing	t_{Kea}	23 µm
Perpendicularity of outer ring outside surface	t_{SD}	7.5 µm
ISO tolerance class for geometrical tolerances		P5

Radial internal clearance

Minimum initial clearance	220 µm
Maximum initial clearance	300 µm

Tolerances and clearances

GENERAL BEARING SPECIFICATIONS

- Tolerances: Normal, P6, P5, tapered bore 1:12, tapered bore 1:30
- Radial internal clearance: cylindrical bore, tapered bore

BEARING INTERFACES

- Seat tolerances for standard conditions
- Tolerances and resultant fit

Compatible products

Recommended product

Withdrawal sleeve, for oil injection, ISO standards	AOH 2256 G
Adapter sleeve for oil injection mounting with HM .. T lock nut and MB lock washer, metric dimensions	OH 3156 H

Terms of use

By accessing and using this website / app owned and published by AB SKF (publ.) (556007-3495 · Gothenburg) (“SKF”), you agree to the following terms and conditions:

Warranty Disclaimer and Limitation of Liability

Although every care has been taken to assure the accuracy of the information on this website / app, SKF provides this information "AS IS" and DISCLAIMS ALL WARRANTIES, EXPRESS OR IMPLIED, INCLUDING, BUT NOT LIMITED TO, IMPLIED WARRANTIES OF MERCHANTABILITY AND FITNESS FOR A PARTICULAR PURPOSE. You acknowledge that your use of this website / app is at your sole risk, that you assume full responsibility for all costs associated with use of this website / app, and that SKF shall not be liable for any direct, incidental, consequential, or indirect damages of any kind arising out of your access to, or use of the information or software made available on this website / app.

Any warranties and representations in this website / app for SKF products or services that you purchase or use will be subject to the agreed upon terms and conditions in the contract for such product or service.

Further, for non-SKF websites / apps that are referenced in our website / app or where a hyperlink appears, SKF makes no warranties concerning the accuracy or reliability of the information in these websites / apps and assumes no responsibility for material created or published by third parties contained therein. In addition, SKF does not warrant that this website / app or these other linked websites / apps are free from viruses or other harmful elements.

Third Party Services

When viewing YouTube content via the SKF website(s) (i.e. using YouTube API Services), you agree to be bound by the YouTube Terms of Service.

Copyright

Copyright in this website / app copyright of the information and software made available on this website / app rest with SKF or its licensors. All rights are reserved. All licensed material will reference the licensor that has granted SKF the right to use the material. The information and software made available on this website / app may not be reproduced, duplicated, copied, transferred, distributed, stored, modified, downloaded or otherwise exploited for any commercial use without the prior written approval of SKF. However, it may be reproduced, stored and downloaded for use by individuals without prior written approval of SKF. Under no circumstances may this information or software be supplied to third parties.

This website /app includes certain images used under license from Shutterstock, Inc.

Trademarks and Patents

All trademarks, brand names, and corporate logos displayed on the website / app are the property of SKF or its licensors, and may not be used in any way without prior written approval by SKF. All licensed trademarks published on this website / app reference the licensor that has granted SKF the right to use the trademark. Access to this website / app does not grant to the user any license under any patents owned by or licensed to SKF.

Changes

SKF reserves the right to make changes or additions to this website / app at any time.