Technical data

51115

One direction thrust ball bearings

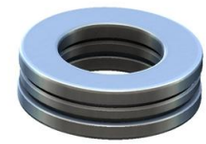

VISUAL (S)

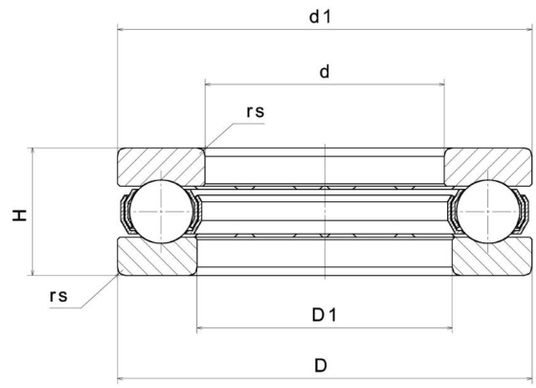

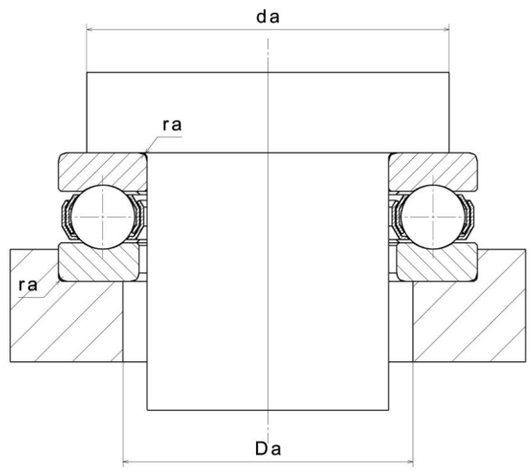

51115
One direction thrust ball bearings

PRODUCT DEFINITION	
Brand	NTN
d - Internal diameter	75 mm
D - External diameter	100 mm
T - Thrust bearing height	19 mm
rs - Min fillet radius	1 mm
Mass	0,399 kg

PRODUCT PERFORMANCE	
Ca - Dynamic axial load rating	44500000 mN
C0a - Static axial load rating	136000000 mN
Cua - Limit axial load rating	6150000 mN
N lim - Oil lubrication limit speed	19200 °/s
N lim - Grease lubrication limit speed	13200 °/s
Tmin - Min operating temperature	233,15 °K
Tmax - Max operating temperature	393,15 °K

ABUTMENT	
Da max - Max shoulder diameter OR	85 mm
da min - Min shoulder diameter IR	90 mm