THIS DRAWING IS UNPUBLISHED. RELEASED FOR PUBLICATION
© COPYRIGHT By – ALL RIGHTS RESERVED.

LOC	DIST
CM	00

REVISIONS

P	LTR	DESCRIPTION	DATE	DWN	APVD
	Y	ECR-13-008537	16SEP13	MT	DZ

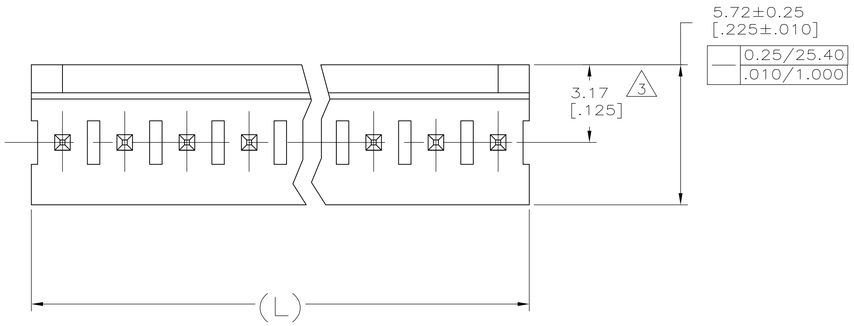

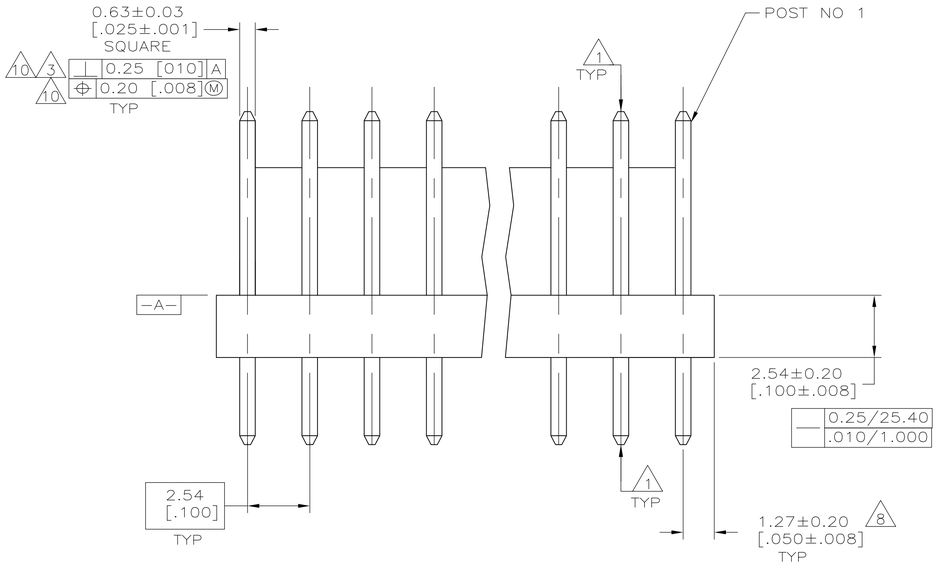

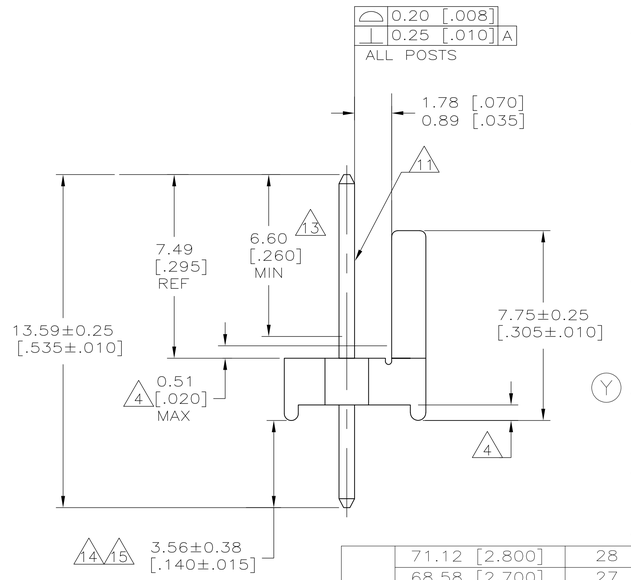

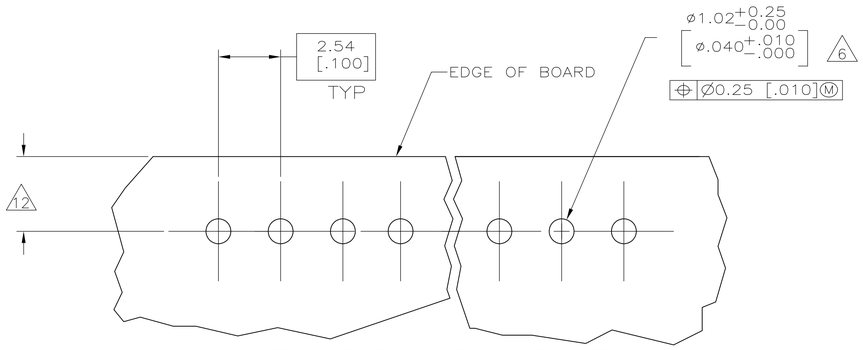

RECOMMENDED MOUNTING HOLE PATTERN
FOR 1.60 [.063] THICK P.C. BOARD 2

1. POST TO WITHSTAND 13 NEWTONS (3 LBS) MINIMUM AXIAL FORCE IN IN BOTH DIRECTIONS SHOWN WITHOUT DISLODGING.
2. TOLERANCES APPLY TO SOLDER SIDE OF BOARD.
3. MEASURED AT –A–
4. PLASTIC FLASH PERMITTED IN THIS AREA.
5. PARTS COMPLY WITH AMP SOLDERABILITY SPEC. NO. 109–11–2.
6. ONE HOLE MAY BE UNDERSIZED 0.81–0.89 [.032–.035] DIA. FOR ASSEMBLY RETENTION DURING WAVE SOLDERING.
7. MATERIAL: HEADER–THERMOPLASTIC POLYESTER 94V–0 (NATURAL)
   POST–COPPER ALLOY
   FINISH–USE PLATING NOTES 13 & 14 FOR –2 THRU –28 AND NOTES 13 & 15 FOR –32 THRU –58
8. COORDINATE DIMENSION APPLIES FROM CENTER OF ACTUAL FEATURE.
9. PLASTIC BURRS CAUSED BY CUT–OFF TOOLING ARE PERMITTED WITHIN THE MAXIMUM TOLERANCE ENVELOPE.
10. POSTS TO BE MEASURED WHEN STRIP IS HELD FLAT.
11. POST MUST WITHSTAND TWO 90° BENDS AGAINST EXTRUSION WITHOUT BREAKING.
12. DIMENSION SHOULD BE 3.30 [.130] WHEN MATING WITH A MTA–100 CONNECTOR ASSEMBLY OR A CST–100 CONNECTOR ASSEMBLY.
13. PLATING: GOLD PLATE AREA, 0.00076 [.000030] GOLD OR 0.00008 [.000003] MIN GOLD FLASH OVER 0.00068 [.000027] PALLADIUM NICKEL, PER TE CONNECTIVITY'S DISCRETION, ALL SIDES, OVER NICKEL UNDERPLATE, .00127 [.000050] MIN, ALL SIDES AND ENTIRE LENGTH OF POST.
14. (Y) PLATING: MATTE TIN PLATE AREA, 0.00381–0.00889 [.000150–.000350] THICK, ALL FOUR SIDES 3.56 [.140] MINIMUM.
15. PLATING: MATTE TIN PLATE AREA, 0.00381–0.00889 [.000150–.000350] THICK, ALL FOUR SIDES 3.56 [.140] MINIMUM.
16. OBSOLETE PARTS: OBSOLETE CIS STREAMLINING PER D.RENAUD/D.SINISI

LEAD FREE

DIM (L)	NO.OF POSN	ASSEMBLY
71.12 [2.800]	28	5–641213–8
68.58 [2.700]	27	5–641213–7
66.04 [2.600]	26	5–641213–6
63.50 [2.500]	25	5–641213–5
60.96 [2.400]	24	5–641213–4
58.42 [2.300]	23	5–641213–3
55.88 [2.200]	22	5–641213–2
53.34 [2.100]	21	5–641213–1
50.80 [2.000]	20	5–641213–0
48.26 [1.900]	19	4–641213–9
45.72 [1.800]	18	4–641213–8
43.18 [1.700]	17	4–641213–7
40.64 [1.600]	16	4–641213–6
38.10 [1.500]	15	4–641213–5
35.56 [1.400]	14	4–641213–4
33.02 [1.300]	13	4–641213–3
30.48 [1.200]	12	4–641213–2
27.94 [1.100]	11	4–641213–1
25.40 [1.000]	10	4–641213–0
22.86 [.900]	9	3–641213–9
20.32 [.800]	8	3–641213–8
17.78 [.700]	7	3–641213–7
15.24 [.600]	6	3–641213–6
12.70 [.500]	5	3–641213–5
10.16 [.400]	4	3–641213–4
7.62 [.300]	3	3–641213–3
5.08 [.200]	2	3–641213–2

LEAD FREE (Y)

	DIM (L)	NO.OF POSN	ASSEMBLY
SUPERSEDED 16	71.12 [2.800]	28	~~2–641213–8~~
	68.58 [2.700]	27	~~2–641213–7~~
	66.04 [2.600]	26	~~2–641213–6~~
	63.50 [2.500]	25	~~2–641213–5~~
	60.96 [2.400]	24	~~2–641213–4~~
	58.42 [2.300]	23	~~2–641213–3~~
	55.88 [2.200]	22	~~2–641213–2~~
	53.34 [2.100]	21	~~2–641213–1~~
	50.80 [2.000]	20	~~2–641213–0~~
	48.26 [1.900]	19	~~1–641213–9~~
	45.72 [1.800]	18	~~1–641213–8~~
	43.18 [1.700]	17	~~1–641213–7~~
	40.64 [1.600]	16	~~1–641213–6~~
	38.10 [1.500]	15	~~1–641213–5~~
	35.56 [1.400]	14	~~1–641213–4~~
OBSOLETE SUPERSEDED 16	33.02 [1.300]	13	~~1–641213–3~~
	30.48 [1.200]	12	~~1–641213–2~~
	27.94 [1.100]	11	~~1–641213–1~~
	25.40 [1.000]	10	1–641213–0
16 SUPERSEDED	22.86 [.900]	9	~~641213–9~~
	20.32 [.800]	8	641213–8
	17.78 [.700]	7	641213–7
	15.24 [.600]	6	641213–6
	12.70 [.500]	5	641213–5
	10.16 [.400]	4	641213–4
	7.62 [.300]	3	641213–3
	5.08 [.200]	2	641213–2

METRIC

THIS DRAWING IS A CONTROLLED DOCUMENT.

DIMENSIONS: mm [INCHES]

TOLERANCES UNLESS OTHERWISE SPECIFIED:
0 PLC ±
1 PLC ±
2 PLC ± 0.13 [.005]
3 PLC ±
4 PLC ±
ANGLES ±

MATERIAL 7 FINISH 7

DWN	S. HOOVER	26–JAN–2005
CHK	D. BOSSI	26–JAN–2005
APVD	D. BOSSI	26–JAN–2005

PRODUCT SPEC
APPLICATION SPEC
WEIGHT
CUSTOMER DRAWING

TE Connectivity

NAME: MTA–100 HEADER ASSEMBLY, POLARIZED, NOTCHED, .025 SQUARE STRAIGHT POST, .000030 GOLD PLATED

SIZE	CAGE CODE	DRAWING NO	RESTRICTED TO
A1	00779	C–641213	

SCALE 8:1 SHEET 1 OF 1 REV Y

4805 (3/11)