May.1.2018 Copyright 2018 HIROSE ELECTRIC CO., LTD. All Rights Reserved.
In case of consideration for using Automotive equipment /
device which demand high reliability, kindly contact our sales window correspondents.

	△數 COUNT	訂正事項 DISCRIPTION OF REVISIONS	擔當 B Y	檢圖 CHKD	年月日 DATE		△數 COUNT	訂正事項 DISCRIPTION OF REVISIONS	擔當 B Y	檢圖 CHKD	年月日 DATE
1	-	REVISED	PJS	KHJ	16. 12. 07	4	3	REVISED	KHJ	LHJ	17. 08. 09
2	-	REVISED	PJS	KHJ	17. 01. 26						. .
3	-	REVISED	PJS	KHJ	17. 03. 10						. .

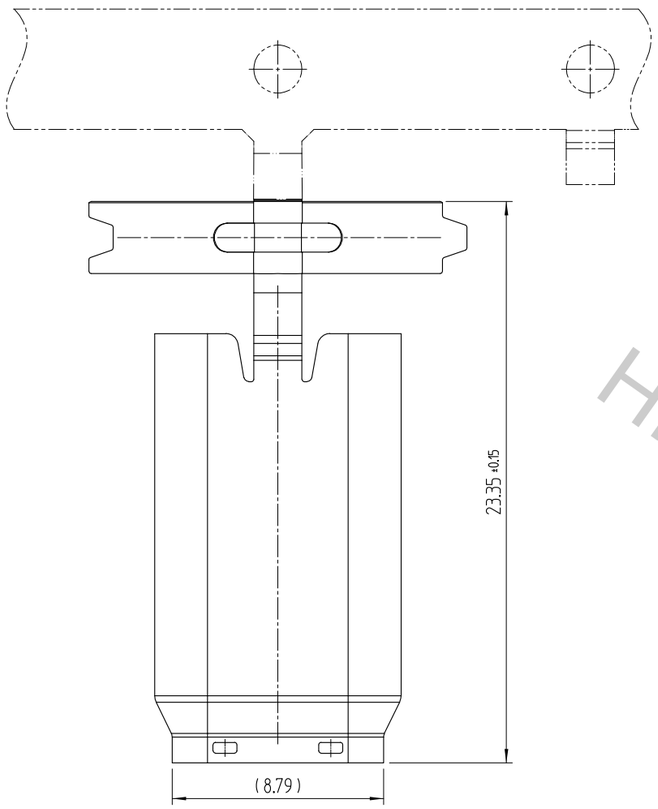

4 CUT OFF A CARRIER (FREE)

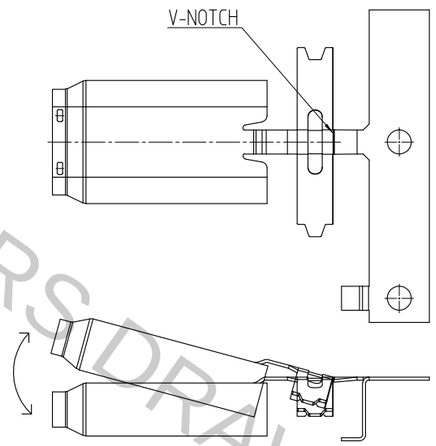

1 DRAWING FOR PACKING (FREE)

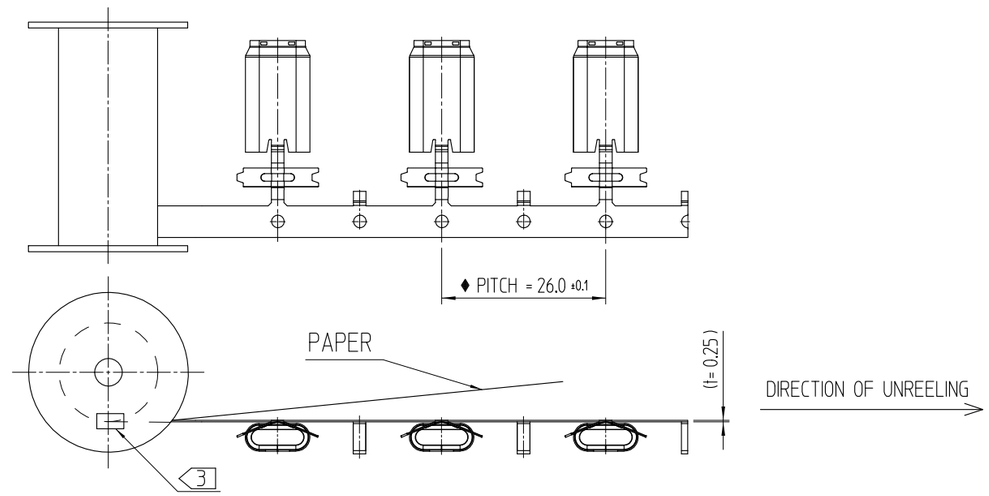

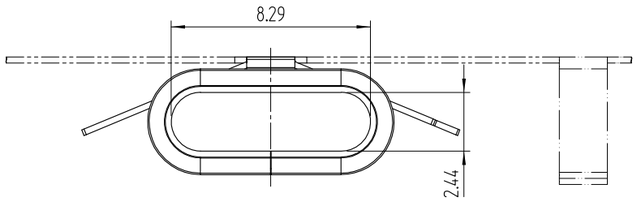

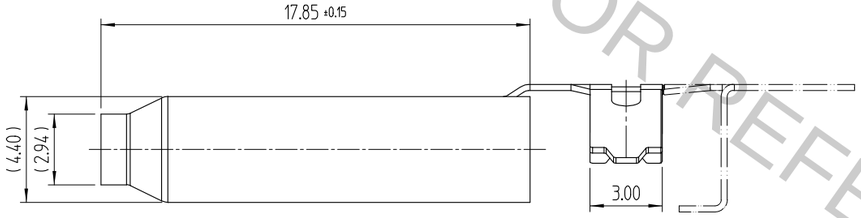

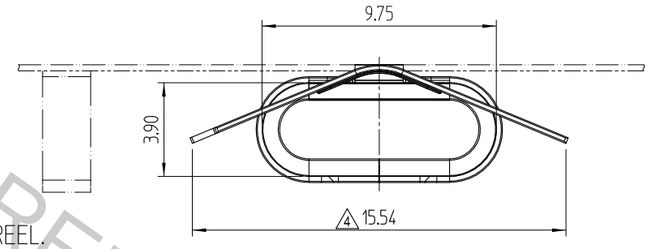

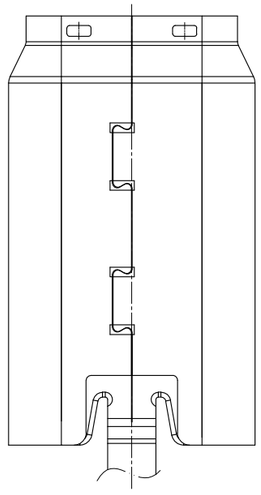

ISO-VIEW

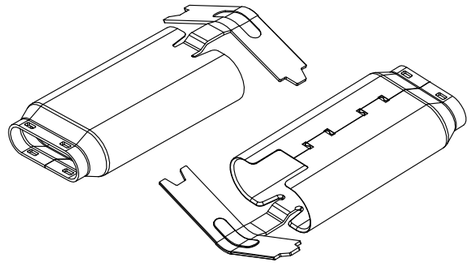

[NOTE] 1 THIS IS DELIVERED BY A REEL.
2 PER REEL : 3,000 PCS.
3 INDICATE 'PART NO.' , 'CL NO' , 'LOT NO,' , AND QUANTITY ON BOTH REEL AND THE SHIPPING OUTER BOX.
4 CUT OFF A CARRIER AS SHOWN.
4 5 GENERAL TORELANCE : ±0.1
4 6 THIS CABLE CLAMPING PART IS APPLIED TO ϕ4.8 CABLE.

NO.	DESCRIPTIONS	MATERIAL	FINISH	REMARKS
1	SLDA	STAINLESS STEEL, 0.25t	NICKEL	-

REMARK	DRAWN	DESIGNED	CHECKED	APPROVED	RELEASED
	J.S.PARK 16.12.07	J.S.PARK 16.12.07	H.J.LEE 16.12.07	T.S.KANG 16.12.07	DEPT 17.10.11 ENG

SCALE 4:1
UNITS mm

DRAWING NO. EDC3-632262
PART NO. CX60-SLDA
HIROSE KOREA CO.,LTD.
CODE NO CL6240-0007-5
1/1

HRS DRAWING FOR REFERENCE