Technical data

NJ209EAT2X

Single row cylindrical roller bearings

Single row cylindrical roller bearing, single direction for axial loads, separable, polyamide cage.

ULTAGE

VISUAL (S)

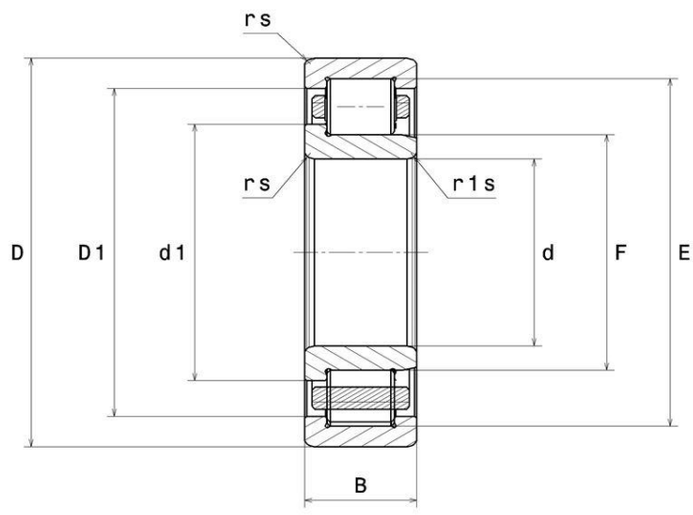

NTN Europe
1 rue des Usines · BP 2017 · 74010 Annecy Cedex · France · Tel. +33 (0)4 50 65 30 00
S.A. au capital de 322 639 919 € · RCS ANNECY B 325 821 072 · Id. Fiscale : FR 48 325 821 072
SIRET 325 821 072 00015 · Code APE 2815 Z · Code NACE 28.15

NJ209EAT2X
Single row cylindrical roller bearings

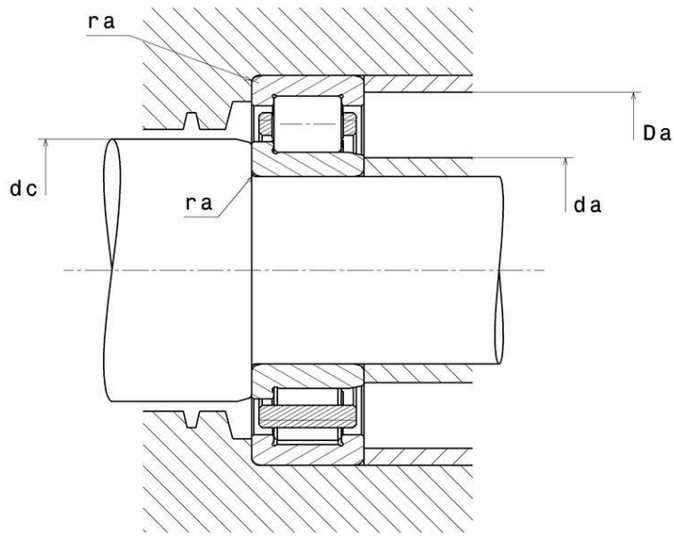

PRODUCT DEFINITION	
Brand	NTN
d - Internal diameter	45 mm
D - External diameter	85 mm
B - Bearing/Inner ring width	19 mm
E - Upper roller diameter	76,5 mm
F - Under roller diameter	54,5 mm
d1 - IR flange outer diameter	58,9 mm
rs - Min fillet radius	1,1 mm
r1s - Min fillet radius	1,1 mm
Radial clearance class	CN
Mass	0,433 kg

PRODUCT PERFORMANCE	
C - Dynamic load	74500000 mN

NJ209EAT2X
Single row cylindrical roller bearings

PRODUCT PERFORMANCE	
C0 - Static load	65500000 mN
Cu - Fatigue limit load	8100000 mN
N lim - Oil lubrication limit speed	64800 °/s
N lim - Grease lubrication limit speed	45600 °/s
Tmin - Min operating temperature	253,15 °K
Tmax - Max operating temperature	393,15 °K

ABUTMENT	
da min - Min shoulder diameter IR	51,5 mm
da max - Small face shoulder max diameter	54 mm
dc min - Min inner ring GO diameter	61 mm
Da max - Max shoulder diameter OR	78,5 mm
ra max - Max fillet radius	1 mm
r1a - Max fillet radius	1 mm

INDUSTRY CALCUL FACTORS

Equivalent dynamic radial load

P = Fr

Equivalent static radial load

Po = Fr