

Image may differ from product. See technical specification for details.

# 32956/P5

## Single row tapered roller bearing

Single row tapered roller bearings are designed to accommodate combined radial and axial loads and provide low friction during operation. The inner ring, with rollers and cage, can be mounted separately from the outer ring. These separable and interchangeable components facilitate mounting, dismounting and maintenance. By mounting one single row tapered roller bearing against another and applying a preload, a rigid bearing application can be achieved. Also available on request with special sized bore and/or outside diameters, suitable for reworked shafts and housings.

- High radial and axial load carrying capacity
- Accommodate axial loads in one direction
- Low friction and long service life
- Separable and interchangeable components

# Overview

## Dimensions

| | |
|---|---|
| Bore diameter | 280 mm |
| Outside diameter | 380 mm |
| Width, total | 63.5 mm |
| Width, inner ring | 63.5 mm |
| Width, outer ring | 48 mm |
| Contact angle | 16.1 ° |

## Performance

| | |
|---|---|
| Basic dynamic load rating | 765 kN |
| Basic static load rating | 1 660 kN |
| Reference speed | 1 100 r/min |
| Limiting speed | 1 600 r/min |

## Properties

| | |
|---|---|
| Bearing part | Complete bearing |
| Number of rows | 1 |
| Locating feature, bearing outer ring | Without |
| Bore type | Cylindrical |
| Cage | Sheet metal |
| Arrangement of contact angle (double-row bearing) | Not applicable |
| Matched arrangement | No |
| Coating | Without |
| Sealing | Without |
| Lubricant | None |
| Relubrication feature | Without |
| Unit system | Metric |
| Candidate for remanufacturing | Yes |
| Indicative carbon footprint for new product | 74.7 kg $CO_2e$ |
| Indicative carbon footprint for remanufactured product | 24.8 kg $CO_2e$ |

## Logistics

| | |
|---|---|
| Product net weight | 20.2 kg |
| eClass code | 23-05-09-10 |
| UNSPSC code | 31171516 |

# Technical specification

| | |
|---|---|
| Dimension series | 4EC |

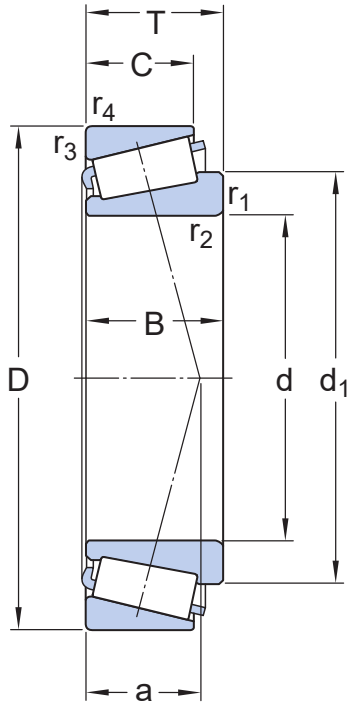


## Dimensions

| | | |
|---|---|---|
| d | 280 mm | Bore diameter |
| D | 380 mm | Outside diameter |
| T | 63.5 mm | Bearing width, total |
| $d_1$ | ≈ 329.2 mm | Shoulder diameter of inner ring |
| B | 63.5 mm | Width of inner ring |
| C | 48 mm | Width of outer ring |
| $r_{1,2}$ | min. 3 mm | Chamfer dimension of inner ring |
| $r_{3,4}$ | min. 2.5 mm | Chamfer dimension of outer ring |
| a | 74.2 mm | Distance side face to pressure point |

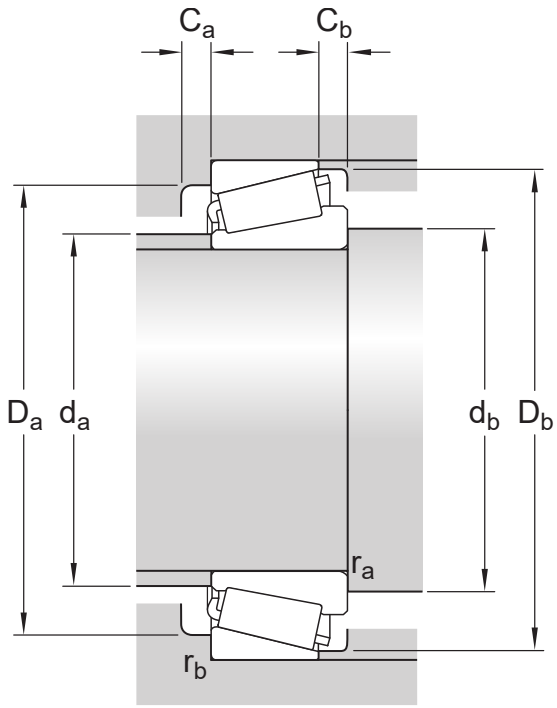


## Abutment dimensions

| | | |
|---|---|---|
| $d_a$ | max. 299 mm | Diameter of shaft abutment |
| $d_b$ | min. 297 mm | Diameter of shaft abutment |
| $D_a$ | min. 348 mm | Diameter of housing abutment |
| $D_a$ | max. 365.5 mm | Diameter of housing abutment |
| $D_b$ | min. 368 mm | Diameter of housing abutment |
| $C_a$ | min. 11 mm | Minimum width of space required in housing on large side face |
| $C_b$ | min. 15.5 mm | Minimum width of space required in housing on small side face |
| $r_a$ | max. 3 mm | Radius of shaft fillet |
| $r_b$ | max. 2.5 mm | Radius of housing fillet |

## Calculation data

| | | |
|---|---|---|
| Basic dynamic load rating | C | 765 kN |
| Basic static load rating | $C_0$ | 1 660 kN |
| Fatigue load limit | $P_u$ | 143 kN |
| Reference speed | | 1 100 r/min |
| Limiting speed | | 1 600 r/min |
| Limiting value | e | 0.43 |

| | | |
|---|---|---|
| Calculation factor | Y | 1.4 |
| Calculation factor | $Y_0$ | 0.8 |

## Tolerances and clearances

### GENERAL BEARING SPECIFICATIONS

- Tolerances:
  metric bearings: Normal and CL7C, CLN
  inch bearings: Normal and CL, deviating width

## BEARING INTERFACES

- Seat tolerances for standard conditions
- Tolerances and resultant fit

# Terms of use

By accessing and using this website / app owned and published by AB SKF (publ.) (556007-3495 · Gothenburg) (“SKF”), you agree to the following terms and conditions:

### Warranty Disclaimer and Limitation of Liability

Although every care has been taken to assure the accuracy of the information on this website / app, SKF provides this information "AS IS" and DISCLAIMS ALL WARRANTIES, EXPRESS OR IMPLIED, INCLUDING, BUT NOT LIMITED TO, IMPLIED WARRANTIES OF MERCHANTABILITY AND FITNESS FOR A PARTICULAR PURPOSE. You acknowledge that your use of this website / app is at your sole risk, that you assume full responsibility for all costs associated with use of this website / app, and that SKF shall not be liable for any direct, incidental, consequential, or indirect damages of any kind arising out of your access to, or use of the information or software made available on this website / app.

Any warranties and representations in this website / app for SKF products or services that you purchase or use will be subject to the agreed upon terms and conditions in the contract for such product or service.

Further, for non-SKF websites / apps that are referenced in our website / app or where a hyperlink appears, SKF makes no warranties concerning the accuracy or reliability of the information in these websites / apps and assumes no responsibility for material created or published by third parties contained therein. In addition, SKF does not warrant that this website / app or these other linked websites / apps are free from viruses or other harmful elements.

### Third Party Services

When viewing YouTube content via the SKF website(s) (i.e. using YouTube API Services), you agree to be bound by the YouTube Terms of Service.

### Copyright

Copyright in this website / app copyright of the information and software made available on this website / app rest with SKF or its licensors. All rights are reserved. All licensed material will reference the licensor that has granted SKF the right to use the material. The information and software made available on this website / app may not be reproduced, duplicated, copied, transferred, distributed, stored, modified, downloaded or otherwise exploited for any commercial use without the prior written approval of SKF. However, it may be reproduced, stored and downloaded for use by individuals without prior written approval of SKF. Under no circumstances may this information or software be supplied to third parties.

This website /app includes certain images used under license from Shutterstock, Inc.

### Trademarks and Patents

All trademarks, brand names, and corporate logos displayed on the website / app are the property of SKF or its licensors, and may not be used in any way without prior written approval by SKF. All licensed trademarks published on this website / app reference the licensor that has granted SKF the right to use the trademark. Access to this website / app does not grant to the user any license under any patents owned by or licensed to SKF.

### Changes

SKF reserves the right to make changes or additions to this website / app at any time.