Honeywell

Honeywell Sensing and Control

GLLA01A1B

Actual product appearance may vary.

Global Limit Switches Series GLL: Side Rotary, Fixed Length Lever with metal roller, 1NO 1NC Direct Opening SPDT snap action, 1/2 in conduit

Features

- Double break, direct-opening snap-action contacts conform to IEC 60947-5-1-3
- EN50047 mounting
- Galvanically isolated contacts
- Double-insulated plastic housing
- 20 mm and 1/2" NPT conduit options
- Contact block integral to switch housing
- Hinge cover for easy wiring access
- 50 mm rollers ideal for elevator applications
- Sealing IP65, NEMA 1, 12, 13
- c-UL-US, CE, CCC

Potential Applications

- Elevators
- Escalators
- Aerial/platform lifts
- Industrial doors
- Packaging equipment

Description

Honeywell•s new GLL Series limit switch is the newest addition to the OEM set of miniature limit switches. It combines and enhances the existing GLS, SZL-VL and EVN switches into one common family, competitively priced for OEM applications. The double insulated compact housing conforms to EN50047 and makes GLL switches ideal for mounting where space is at a premium. These products also feature direct opening normally closed circuits. The GLL Series is available in a variety of actuator styles required for OEM applications. Designed to the IEC electrical standard, GLL is suitable for world-wide use and also meets globally accepted mounting standards. The GLL Series provides a cost-effective solution for OEM high volume applications and enables manufacturers to be competitive in today•s demanding business environment.

Product Specifications	
Availability	Global
Operating Force (O.F.)	12,0 N-cm [1.062 lb-in]
Release Force (R.F.)	2,0 N-cm [0.177 lb-in]
Pretravel (P.T.)	30° max.
Overtravel (O.T.)	40° min.
Differential Travel (D.T.)	18° max.
Product Type	EN 50047 Global Limit Switch
Actuator	Side Rotary
Lever Style	25 mm Fixed Length Lever with Metal Roller (17mm dia x 7 mm wide)
Circuitry	1NO 1NC Direct Opening Snap Action
Ampere Rating	10 A (Thermal)
Supply Voltage	300 Vac and 250 Vdc max.
Housing Material	Plastic
Termination Type	12,7 mm [0.5 in] conduit
Housing Type	EN 50047
Series Name	GLL
Shock	50 g per IEC 68-2-27c (w/o Actuator)
Vibration	10 g per IEC 68-2-6 (w/o Actuator)
Sealing	IP65, NEMA 1, 12, 13
Approvals	c-UL-us, CE, CCC
CSA File #	E216958
UL File #	E216958
Mechanical Life	5 million operations
Operating Temperature Range	-10 °C to 80 °C [14 °F to 176 °F]
Comment	Side rotary 25mm fixed length lever with metal roller; 12,7 mm [0.5 in] conduit
UNSPSC Code	302119
UNSPSC Commodity	302119 Switches and controls and relays
Sealed	Industrial
Operating Position (O.P.)	30°

FO-55111-A

HONEYWELL PART NUMBER

GLLA01A1B

REV	DOCUMENT	CHANGED BY	CHECK
C	0016843	KRB 07NOV05	RJ

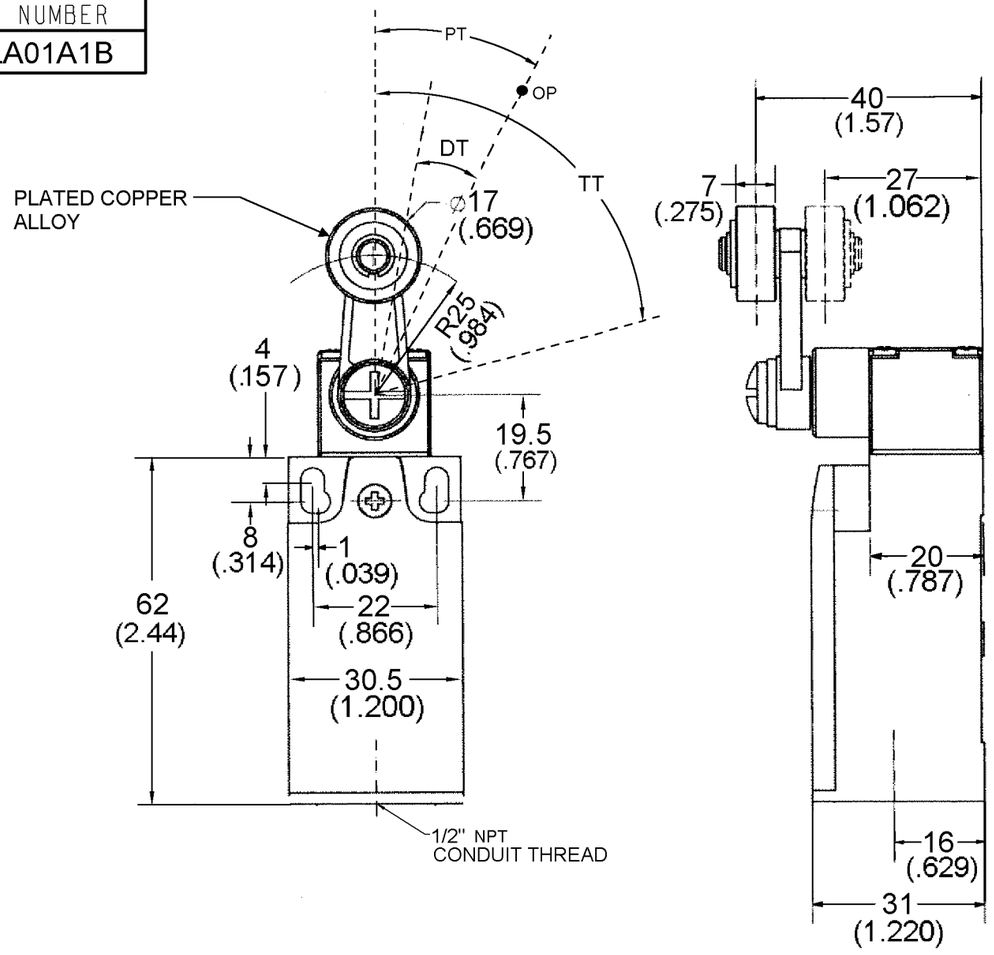

NOMINAL TRAVELS	
Items	
Operating Torque (max)	12N-cm (1.062 lb-in)
Release Torque (min)	2 N-cm (0.177 lb-in)
PT (max) (Pre-Travel)	30°MAX
OT (min) (Over-Travel)	40°
DT (max) (Differential Travel)	18°
Travel to Operate Positive Break NC Contacts:	55°
TT (Total Travel)	70°

NOTES :
1 - BLUE GLASS FIBER REINFORCED PBT HOUSING AND COVER.
BLACK GLASS FIBER REINFORCED POM HEAD.
2 - ENCLOSURE DOUBLE INSULATED TO IEC 536 CLASS II.
3 - MINIMUM OPERATING VELOCITY (Vmin) = 1.0 MM/S
MAXIMUM OPERATING VELOCITY (Vmax) = 2 M/S
MAXIMUM OPERATING FREQUENCY (Fmax) = 120 OPS/MIN
4 - FREE POSITION (FP), OPERATING POINT (OP), TOTAL TRAVEL (TT), AND PRETRAVEL (PT) ALL TO EN50047.
5 - MAXIMUM TIGHTENING TORQUE FOR SCREWS
FOR HEAD SCREWS : 0.2 Nm (1.7 in-lbs)
COVER SCREWS : 0.5 Nm (4.4 in-lbs)
LEVER RETAINING SCREW (SIDE ROTARY) : 1 Nm (9 in-lbs)
TERMINAL SCREWS (RECOMMENDED) : 0.8 Nm - 1.0 Nm (7-9 in-lbs)
6 - RECOMMENDED WIRE SIZE : 18 AWG - 16 AWG (.75mm^2- 1.5mm^2) SOLID
18 AWG - 14 AWG (.75mm^2- 2.5mm^2) STRANDED

SNAP ACTION CONTACTS

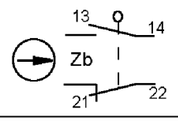

IEC 60947-5-1 ELECTRICAL RATING			
AC		DC	
A600	AC15	Q300	DC13
Ue	Ie	Ue	Ie
VOLTS	AMPS	VOLTS	AMPS
120	6	125	0.55
240	3	250	0.27
380	1.9		
480	1.5		
500	1.4		
600	1.2		
Ith = 10A			

ENVIRONMENTAL RATINGS	
IP65 NEMA 1, 12, 13	
TEMP RANGE:	-10°C TO 80°C 14°F TO 176°F
SHOCK:	50G FOR IEC 68-2-27
VIBRATION:	10G PER IEC 68-2-6

APPROVALS
c UL LISTED
CE
CCC
EN50047 IEC 60947-5-1

DESIGN UNITS: INCH
TOLERANCES UNLESS NOTED:

NO PLACE	X	±	0
ONE PLACE	.X	±	0.0
TWO PLACE	.XX	±	0.01
THREE PLACE	.XXX	±	0.005
FOUR PLACE	.XXXX	±	0.0005
ANGLES		±	3

THIRD ANGLE PROJECTION

DRAWN	PM	17MAY05
CHECK	-	-

THIS DRAWING COVERS A PROPRIETARY ITEM AND IS THE PROPERTY OF HONEYWELL. THIS DRAWING IS NOT TO BE COPIED OR USED WITHOUT THE PERMISSION OF HONEYWELL.

INTERPRET PER ASME Y14.5M-1994
OTHER HONEYWELL ENGINEERING STANDARDS MAY APPLY

RASTER

Honeywell

TITLE
SWITCH, LIMIT

SIZE	TYPE	DRAWING NAME	REV
B	I	GLLA01A1B	C

SCALE -

SHEET 1 OF 1