Symbol

Product feature

1、The structure of oil dripping adopts gap seal type, which makes the adjustment of oil supply more reliable;
2、Adjustable ring for oil supply can only revolve for one circle. The quantity of oil supply basically takes on linear distribution. The quantity of oil supply can be generally calculated according to the position of graduation ring;
3、Special drip nozzle structure will produce negative pressure in oil dripping outlet and the mist flow is minimal;
4、It is available to add oil under pressure, and the oil bowl is large;
5、The bracket can be selected for installation.

Specification

Model	GL200-06	GL200-08	GL300-08	GL300-10	GL300-15	GL400-10	GL400-15	GL600-20	GL600-25
Fluid	Air								
Port size	1/8"	1/4"	1/4"	3/8"	1/2"	3/8"	1/2"	3/4"	1"
Pressure range	0.05~0.9MPa(7~130Psi)								
Proof pressure	1.5 MPa(215Psi)								
Temperature range	-20~70℃								
Capacity of oil bowl	25CC		75CC			160CC		380CC	
Recommended lubricant	ISO VG 32 or equivalent								
Weight	130g		360g			670g		1300g	

Ordering code

GL200 — 08 — □ — P

Model	Port size
GL200：G200 Series Lubricator	06：1/8" 08：1/4"
GL300：G300 Series Lubricator	08：1/4" 10：3/8" 15：1/2"
GL400：G400 Series Lubricator	10：3/8" 15：1/2"
GL600：G600 Series Lubricator	20：3/4" 25：1"

Accessories
Blank：Bracket
J：No bracket ①

Thread
Blank：PT
T：NPT
G：G

① No bracket is a standard configuration.

Flow chart

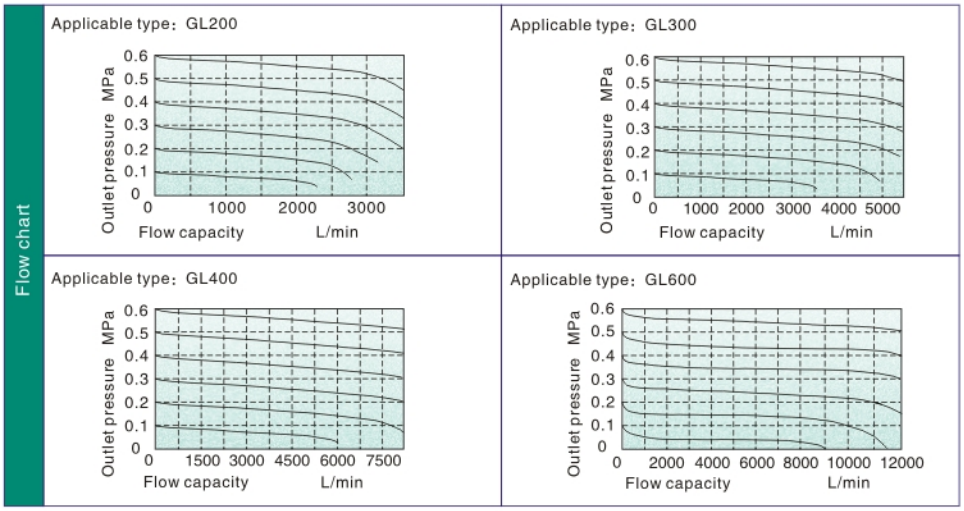

Inner structure and Material of major parts

GL200

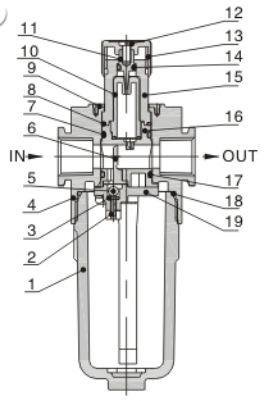

GL600

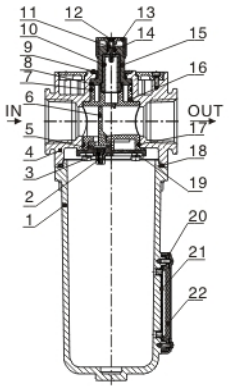

NO.	Item	Material
1	Oil Bowl	Aluminum alloy(GL600)\ PC (other)
2	Adjusting spring	Stainless steel
3	O– ring	NBR
4	Body of lubricator	Aluminum alloy
5	Steel ball	Stainless steel
6	Distance block	PU
7	O– ring	NBR
8	O– ring	NBR
9	Indicating ring	POM
10	Drip pipe	PC
11	Ejector pin	Brass
12	Screw	Brass
13	Adjusting ring	POM
14	O– ring	NBR
15	Bowl	PC
16	Sprayer body	PA66
17	O–ring	NBR
18	O–ring	NBR
19	Sprayer bottom cap	POM
20	Liquid meter cover	SPCC
21	Liquid meter seal	FPM–P
22	Liquid meter inside cover	PC

Dimensions

GL200

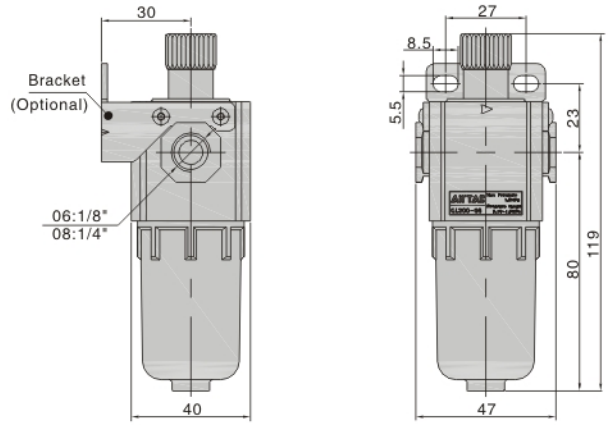

GL300 GL400

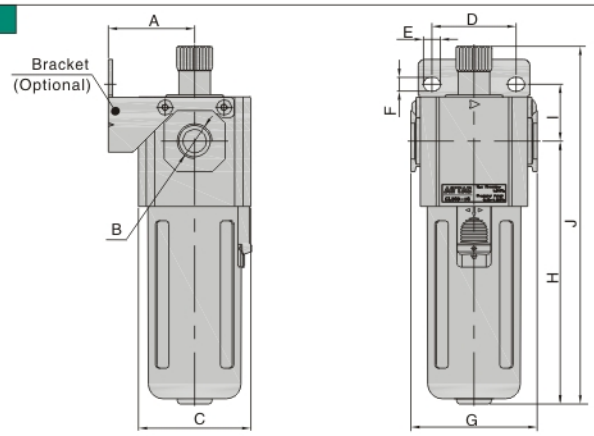

Model\Item	A	B	C	D	E	F	G	H	I	J
GL300–08	41	1/4"	53.5	40	8	6.5	60	125	27	169
GL300–10	41	3/8"	53.5	40	8	6.5	60	125	27	169
GL300–15	41	1/2"	53.5	40	8	6.5	60	125	27	169
GL400–10	50	3/8"	71	55	11	8.5	80	142	33.5	190
GL400–15	50	1/2"	71	55	11	8.5	80	142	33.5	190
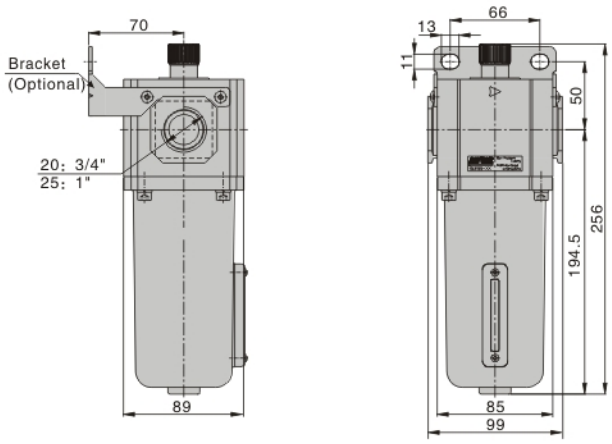
GL600