Schematic for the NCP3063 (DFN) Voltage Inverting Evaluation Board

9/27/2006

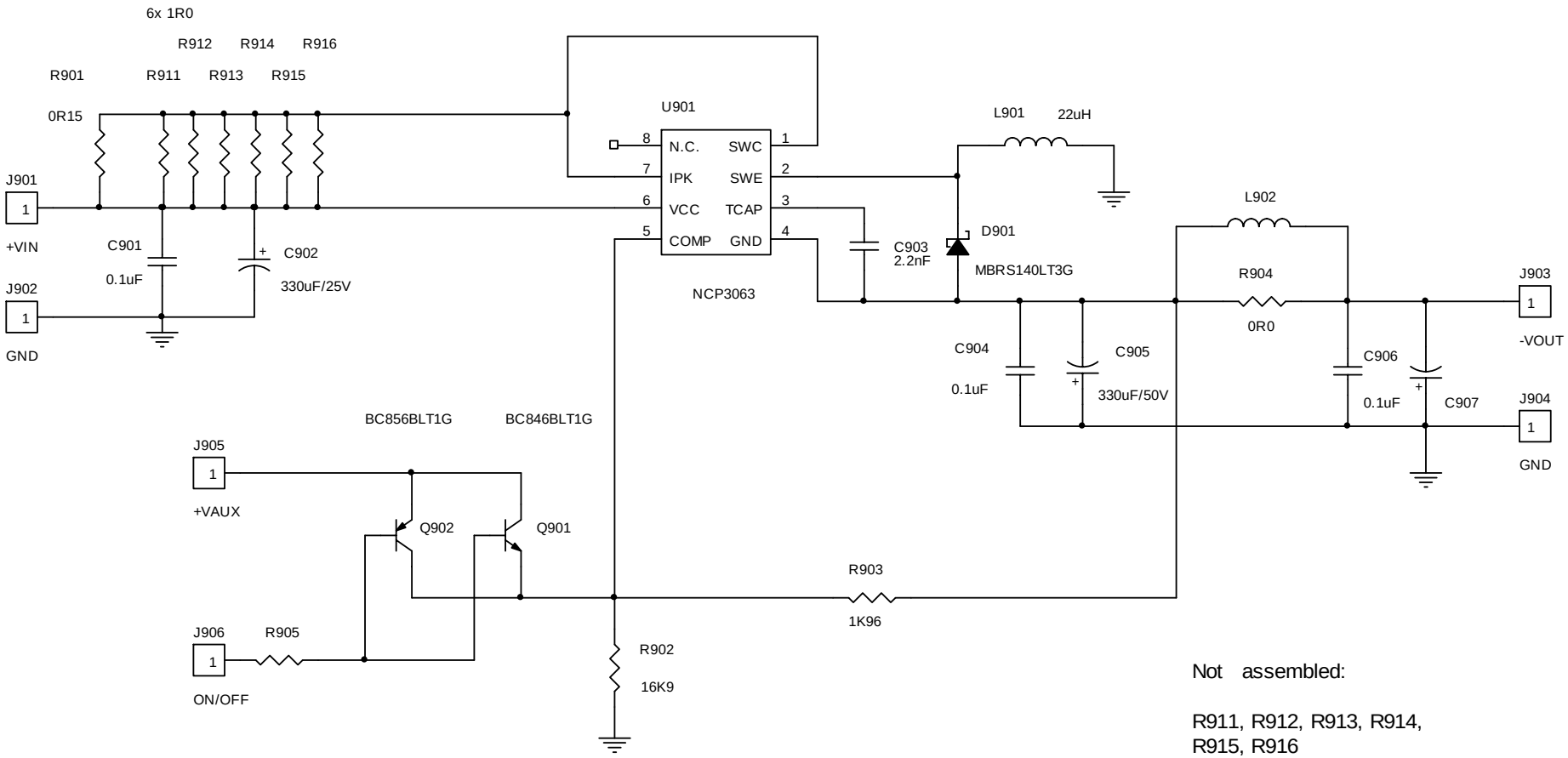

Not assembled:

R911, R912, R913, R914,
R915, R916
R905
L902
C907
Q901, Q902