COVER FOR FOOT 45

Article Nr. 22.1164/0

See the product on the website →
Download CAD Files →

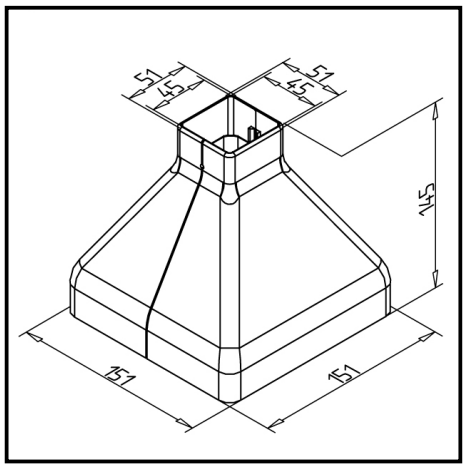

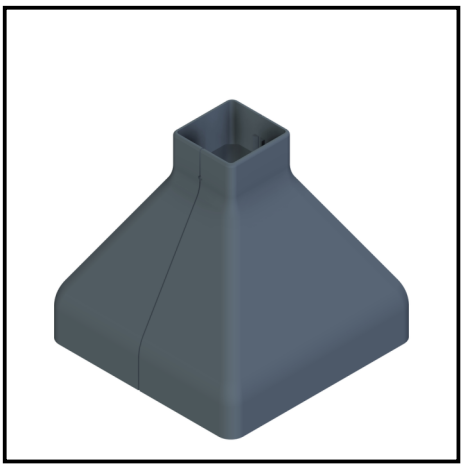

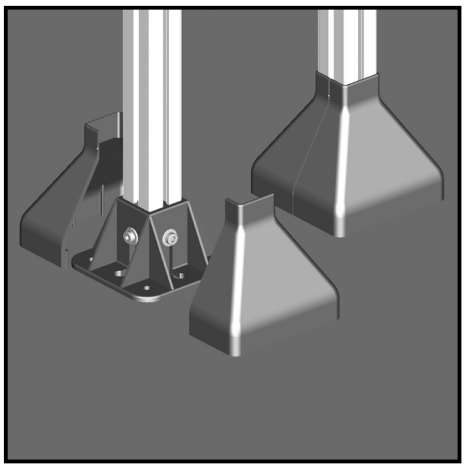

TECHN. DATA / ITEMS SUPPLIED

- ABS, grey
- Weight = 0.166 kg/pair

APPLICATIONS

- To cover the stand foot 45 GD and 45 GD open

ASSEMBLY

- Attach to profiles/stand foot