HARRIS SEMICONDUCTOR

ICM7216A, ICM7216B ICM7216D

8-Digit Multi-Function Frequency Counter/Timer

December 1993

Features All Versions

- **Functions as a Frequency Counter (DC to 10MHz)**
- **Four Internal Gate Times: 0.01s, 0.1s, 1s, 10s in Frequency Counter Mode**
- **Directly Drives Digits and Segments of Large Multiplexed LED Displays (Common Anode and Common Cathode Versions)**
- **Single Nominal 5V Supply Required**
- **Highly Stable Oscillator, Uses 1MHz or 10MHz Crystal**
- **Internally Generated Decimal Points, Interdigit Blanking, Leading Zero Blanking and Overflow Indication**
- **Display Off Mode Turns Off Display and Puts Chip Into Low Power Mode**
- **Hold and Reset Inputs for Additional Flexibility**

Features ICM7216A and ICM7216B

- **Functions Also as a Period Counter, Unit Counter, Frequency Ratio Counter or Time Interval Counter**
- **1 Cycle, 10 Cycles, 100 Cycles, 1000 Cycles in Period, Frequency Ratio and Time Interval Modes**
- **Measures Period From 0.5μs to 10s**

Features ICM7216D

- **Decimal Point and Leading Zero Banking May Be Externally Selected**

Ordering Information

PART NUMBER	TEMPERATURE RANGE	PACKAGE
ICM7216AIJI	-25°C to +85°C	28 Lead Ceramic DIP
ICM7216BIPI	-25°C to +85°C	28 Lead Plastic DIP
ICM7216DIPI	-25°C to +85°C	28 Lead Plastic DIP

The ICM7216A and ICM7216B are fully integrated Timer Counters with LED display drivers. They combine a high frequency oscillator, a decade timebase counter, an 8-decade data counter and latches, a 7-segment decoder, digit multiplexers and 8 segment and 8 digit drivers which directly drive large multiplexed LED displays. The counter inputs have a maximum frequency of 10MHz in frequency and unit counter modes and 2MHz in the other modes. Both inputs are digital inputs. In many applications, amplification and level shifting will be required to obtain proper digital signals for these inputs.

The ICM7216A and ICM7216B can function as a frequency counter, period counter, frequency ratio (f_A/f_B) counter, time interval counter or as a totalizing counter. The counter uses either a 10MHz or 1MHz quartz crystal timebase. For period and time interval, the 10MHz timebase gives a 0.1μs resolution. In period average and time interval average, the resolution can be in the nanosecond range. In the frequency mode, the user can select accumulation times of 0.01s, 0.1s, 1s and 10s. With a 10s accumulation time, the frequency can be displayed to a resolution of 0.1Hz in the least significant digit. There is 0.2s between measurements in all ranges.

The ICM7216D functions as a frequency counter only, as described above.

All versions of the ICM7216 incorporate leading zero blanking. Frequency is displayed in kHz. In the ICM7216A and ICM7216B, time is displayed in μs. The display is multiplexed at 500Hz with a 12.2% duty cycle for each digit. The ICM7216A is designed for common anode displays with typical peak segment currents of 25mA. The ICM7216B and ICM7216D are designed for common cathode displays with typical peak segment currents of 12mA. In the display off mode, both digit and segment drivers are turned off, enabling the display to be used for other functions.

CAUTION: These devices are sensitive to electrostatic discharge. Users should follow proper I.C. Handling Procedures.

Copyright © Harris Corporation 1993

File Number **3166**

Pinouts

ICM7216A
COMMON ANODE
(CDIP)
TOP VIEW

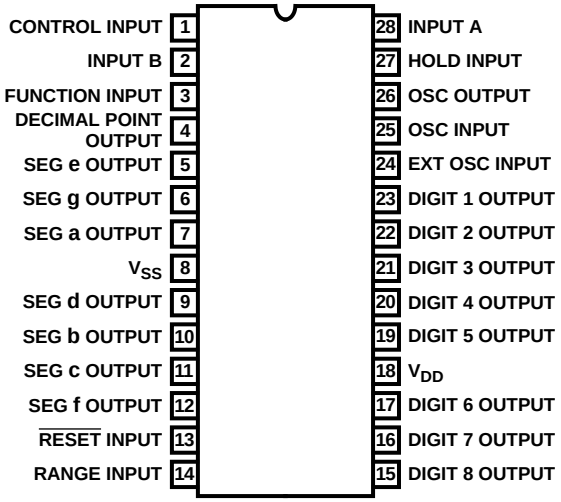

ICM7216B
COMMON CATHODE
(PDIP)
TOP VIEW

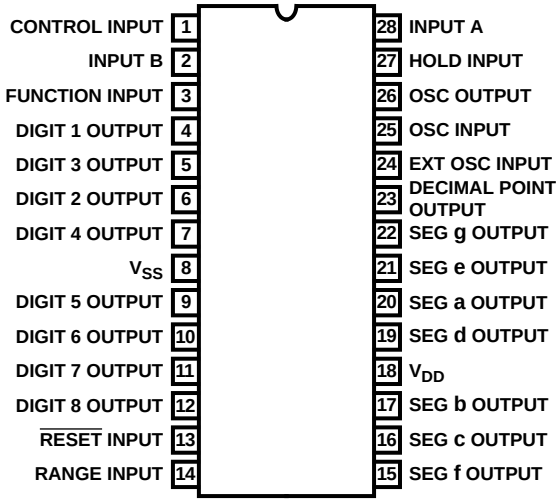

ICM7216D
COMMON CATHODE
(PDIP)
TOP VIEW

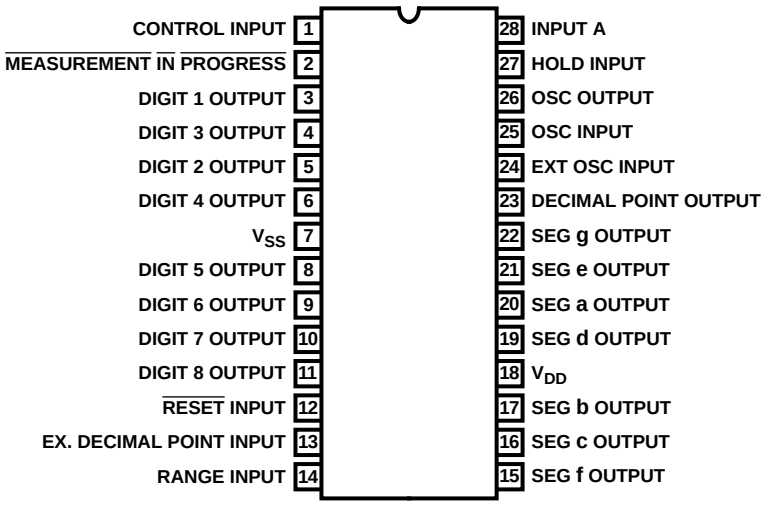

Functional Block Diagram

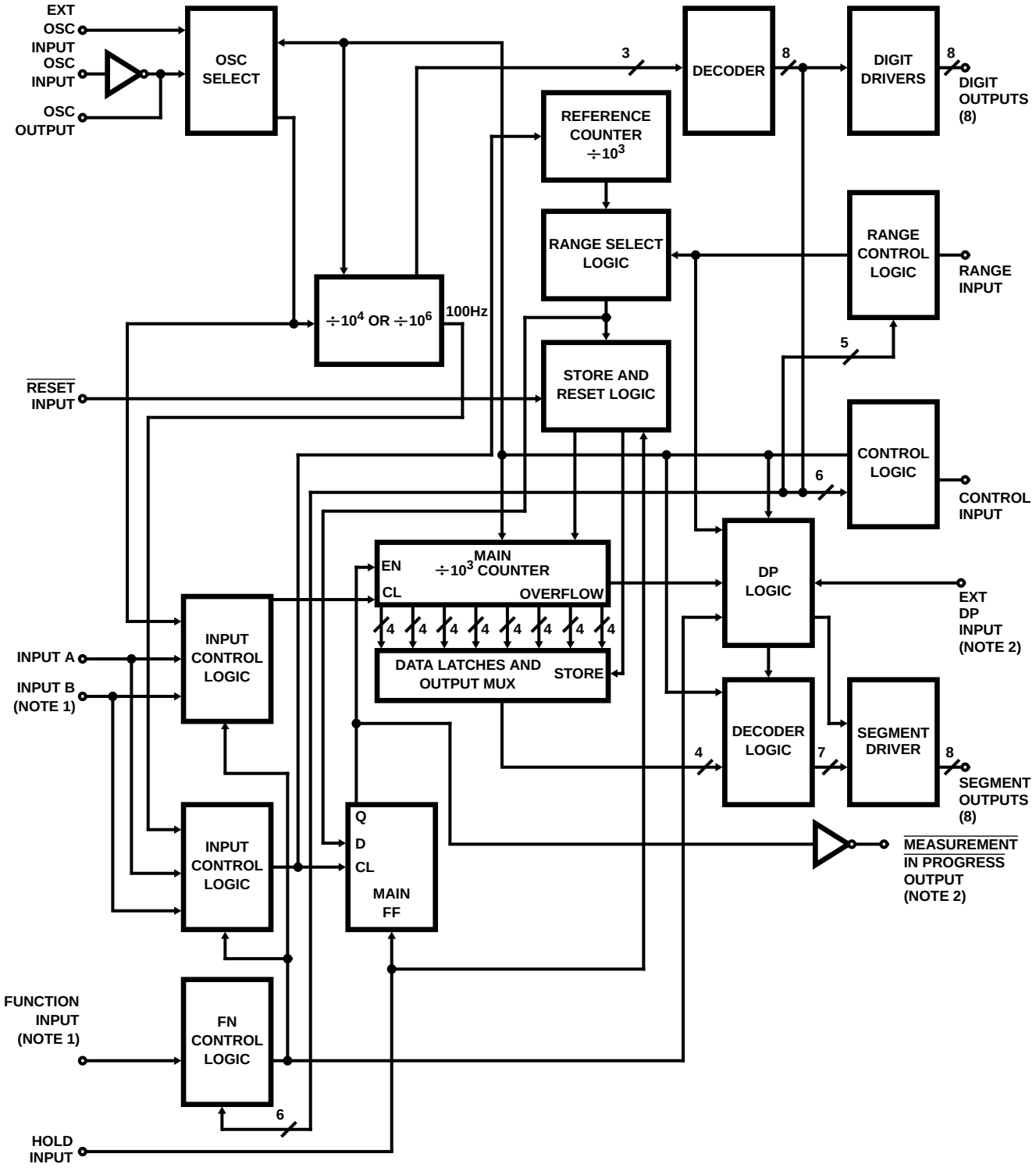

NOTES:

1. Function input and input B available on ICM7216A/B only.
2. Ext DP input and $\overline{\text{MEASUREMENT IN PROGRESS}}$ output available on ICM7216D only.

Absolute Maximum Ratings

Maximum Supply Voltage (V_{DD} - V_{SS}) 6.5V
Maximum Digit Output Current 400mA
Maximum Segment Output Current 60mA
Voltage On Any Input or
Output Terminal (Note 1) . . . . . (V_{DD} +0.3V) to (V_{SS} -0.3V)
Storage Temperature Range . . . . . -65°C to +150°C
Lead Temperature (Soldering 10s) . . . . . +300°C

Thermal Information

Thermal Resistance	θ_{JA}	θ_{JC}
Ceramic DIP Package	55°C/W	20°C/W
Plastic DIP Package	55°C/W	-

Junction Temperature
Ceramic Packages . . . . . +175°C
Plastic Packages . . . . . +150°C
Operating Temperature Range . . . . . -25°C to +85°C

CAUTION: Stresses above those listed in "Absolute Maximum Ratings" may cause permanent damage to the device. This is a stress only rating and operation of the device at these or any other conditions above those indicated in the operational sections of this specification is not implied.

Electrical Specifications

V_{DD} = 5.0V, V_{SS} = 0V, T_A = +25°C, Unless Otherwise Specified

PARAMETER	TEST CONDITIONS	MIN	TYP	MAX	UNITS
ICM7216A/B					
Operating Supply Current, I_{DD}	Display Off, Unused Inputs to V_{SS}	-	2	5	mA
Supply Voltage Range (V_{DD} -V_{SS}), V_{SUPPLY}	INPUT A, INPUT B Frequency at f_{MAX}	4.75	-	6.0	V
Maximum Frequency INPUT A, Pin 28, $f_{A(MAX)}$	Figure 9, Function = Frequency, Ratio, Unit Counter	10	-	-	MHz
	Function = Period, Time Interval	2.5	-	-	MHz
Maximum Frequency INPUT B, Pin 2, $f_{B(MAX)}$	Figure 10	2.5	-	-	MHz
Minimum Separation INPUT A to INPUT B Time Interval Function	Figure 1	250	-	-	ns
Maximum Oscillator Frequency and External Oscillator Frequency, f_{OSC}		10	-	-	MHz
Minimum External Oscillator Frequency, f_{OSC}		-	-	100	kHz
Oscillator Transconductance, g_M	V_{DD} = 4.75V, T_A = +85°C	2000	-	-	µS
Multiplex Frequency, f_{MUX}	f_{OSC} = 10MHz	-	500	-	Hz
Time Between Measurements	f_{OSC} = 10MHz	-	200	-	ms
Input Voltages: Pins 2, 13, 25, 27, 28					
Input Low Voltage, V_{INL}		-	-	1.0	V
Input High Voltage, V_{INH}		3.5	-	-	V
Input Resistance to V_{DD} Pins 13, 24, R_{IN}	V_{IN} = V_{DD} -1.0V	100	400	-	kΩ
Input Leakage Pin 27,28,2, I_{ILK}		-	-	20	µA
Input Range of Change, dV_{IN}/dt	Supplies Well Bypassed	-	15	-	mV/µs
ICM7216A					
Digit Driver: Pins 15, 16, 17, 19, 20, 21, 22, 23					
High Output Current, I_{OH}	V_{OUT} = V_{DD} -2.0V	-140	-180	-	mA
Low Output Current, I_{OL}	V_{OUT} = V_{SS} +1.0V	-	0.3	-	mA
Segment Driver: Pins 4, 5, 6, 7, 9,10, 11, 12					
Low Output Current, I_{OL}	V_{OUT} = V_{SS} +1.5V	20	35	-	mA
High Output Current, I_{OH}	V_{OUT} = V_{DD} -2.5V		-100	-	µA
Multiplex Inputs: Pins 1,3,14					
Input Low Voltage, V_{INL}		-	-	0.8	V
Input High Voltage, V_{INH}		2.0	-	-	V
Input Resistance to V_{SS}, R_{IN}	V_{IN} = V_{SS} +1.0V	50	100	-	kΩ

Electrical Specifications V_{DD} = 5.0V, V_{SS} = 0V, T_A = +25°C, Unless Otherwise Specified **(Continued)**

PARAMETER	TEST CONDITIONS	MIN	TYP	MAX	UNITS
ICM7216B					
Digit Driver: Pins 4, 5, 6, 7, 9, 10, 11, 12					
Low Output Current, I_{OL}	$V_{OUT} = V_{SS}$ +1.3V	50	75	-	mA
High Output Current, I_{OH}	$V_{OUT} = V_{DD}$ -2.5V	-	-100	-	µA
Segment Driver: Pins 15, 16, 17, 19, 20, 21, 22, 23					
High Output Current, I_{OH}	$V_{OUT} = V_{DD}$ -2.0V	-10	-	-	mA
Leakage Current, I_{SLK}	$V_{OUT} = V_{DD}$ -2.5V	-	-	10	µA
Multiplex Inputs: Pins 1, 3, 14					
Input Low Voltage, V_{INL}		-	-	V_{DD} -2.0	V
Input High Voltage, V_{INH}		V_{DD} -0.8	-	-	V
Input Resistance to V_{DD}, R_{IN}	$V_{IN} = V_{DD}$ -2.5V	100	360	-	kΩ
ICM7216D					
Operating Supply Current, I_{DD}	Display Off, Unused Inputs to V_{SS}	-	2	5	mA
Supply Voltage Range (V_{DD} -V_{SS}), V_{SUPPLY}	INPUT A Frequency at f_{MAX}	4.75	-	6.0	V
Maximum Frequency INPUT A, Pin 28, $f_{A(MAX)}$	Figure 9	10	-	-	MHz
Maximum Oscillator Frequency and External Oscillator Frequency, f_{OSC}		10	-	-	MHz
Minimum External Oscillator Frequency, f_{OSC}		-	-	100	kHz
Oscillator Transconductance, g_M	V_{DD} = 4.75V, T_A = +85°C	2000	-	-	µS
Multiplex Frequency, f_{MUX}	f_{OSC} = 10MHz	-	500	-	Hz
Time Between Measurements	f_{OSC} = 10MHz	-	200	-	ms
Input Voltages: Pins 12, 27, 28					
Input Low Voltage, V_{INL}		-	-	1.0	V
Input High Voltage, V_{INH}		3.5	-	-	V
Input Resistance to V_{DD} Pins 12, 24, R_{IN}	$V_{IN} = V_{DD}$ -1.0V	100	400	-	kΩ
Input Leakage, Pins 27, 28, I_{ILK}		-	-	20	µA
Output Current, Pin 2, I_{OL}	V_{OL} = +0.4V	0.36	-	-	mA
Output Current, Pin 2, I_{OH}	$V_{OH} = V_{DD}$ -0.8V	265	-	-	µA
Input Rate of Change, dV_{IN}/dt	Supplies Well Bypassed	-	15	-	mV/µs
Digit Driver: Pins 3, 4, 5, 6, 8, 9, 10, 11					
Low Output Current, I_{OL}	V_{OUT} = +1.3V	50	75	-	mA
High Output Current, I_{OH}	$V_{OUT} = V_{DD}$ -2.5V	-	100	-	µA
Segment Driver: Pins 15, 16, 17, 19, 20, 21, 22, 23					
High Output Current, I_{OH}	$V_{OUT} = V_{DD}$ -2.0V	10	15		mA
Leakage Current, I_{SLK}	$V_{OUT} = V_{DD}$ -2.5V	-	-	10	µA
Multiplex Inputs: Pins 1, 13, 14					
Input Low Voltage, V_{INL}		-	-	V_{DD} -2.0	V
Input High Voltage, V_{INH}		V_{DD} -0.8	-	-	V
Input Resistance to V_{DD}, R_{IN}	$V_{IN} = V_{DD}$ -1.0V	100	360	-	kΩ

NOTE:

1. The ICM7216 may be triggered into a destructive latchup mode if either input signals are applied before the power supply is applied or if input or outputs are forced to voltages exceeding V_{DD} to V_{SS} by more than 0.3V.

Timing Diagram

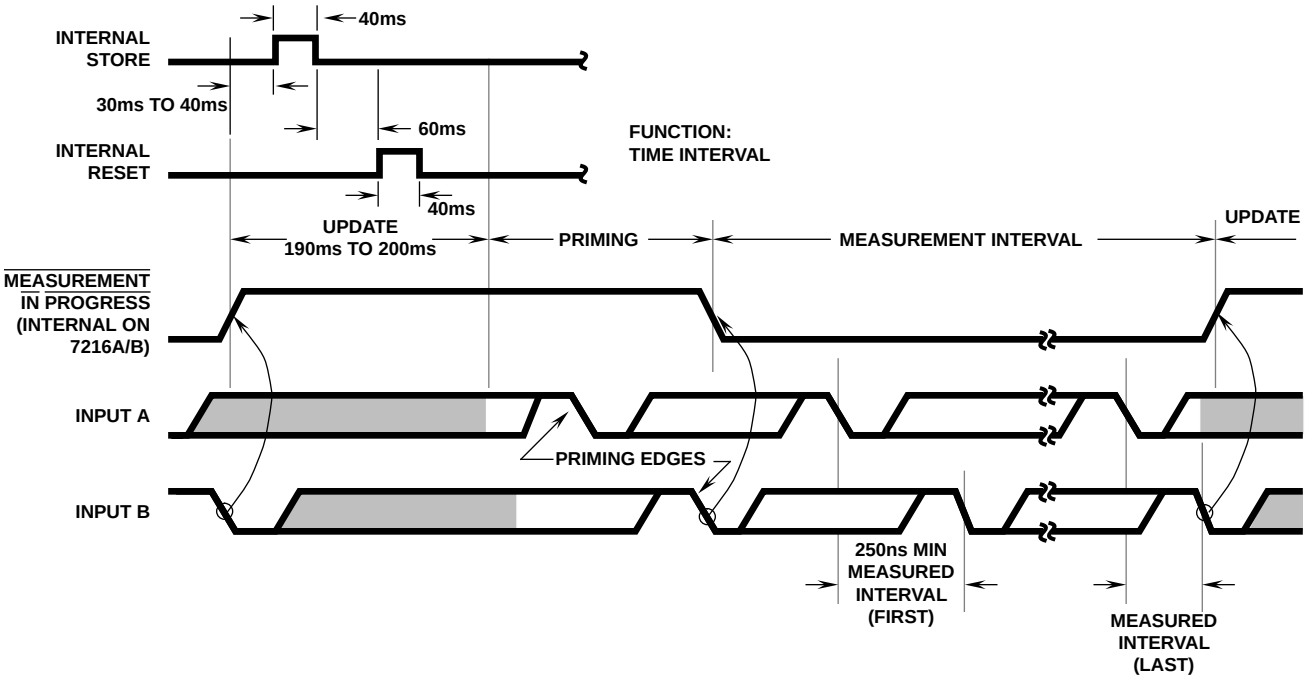

NOTE:

1. If range is set to 1 event, first and last measured interval will coincide.

FIGURE 1. WAVEFORMS FOR TIME INTERVAL MEASUREMENT (OTHERS ARE SIMILAR, BUT WITHOUT PRIMING PHASE)

Typical Performance Curves

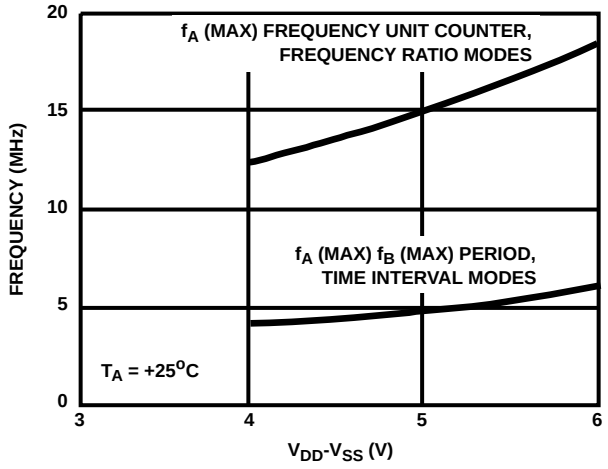

FIGURE 2. f_A(MAX), f_B(MAX) AS A FUNCTION OF SUPPLY

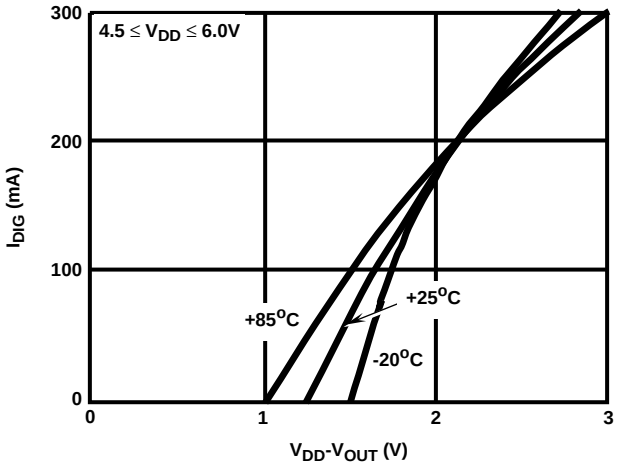

FIGURE 3. ICM7216A TYPICAL I_{DIG} vs V_{DD}-V_{OUT}

Typical Performance Curves (Continued)

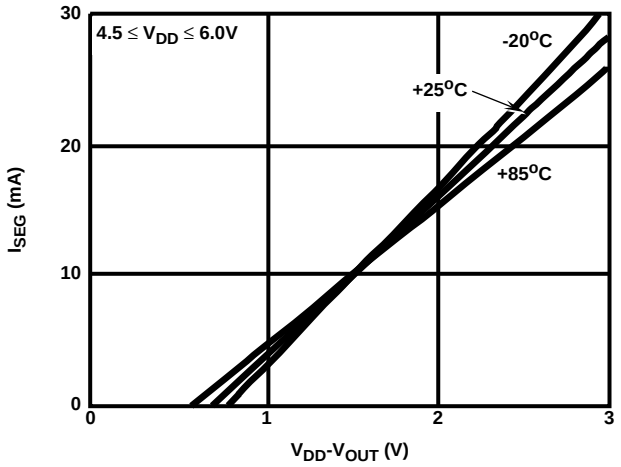

FIGURE 4. ICM7216B & ICM7216D TYPICAL I_{SEG} vs V_{DD}-V_{OUT}

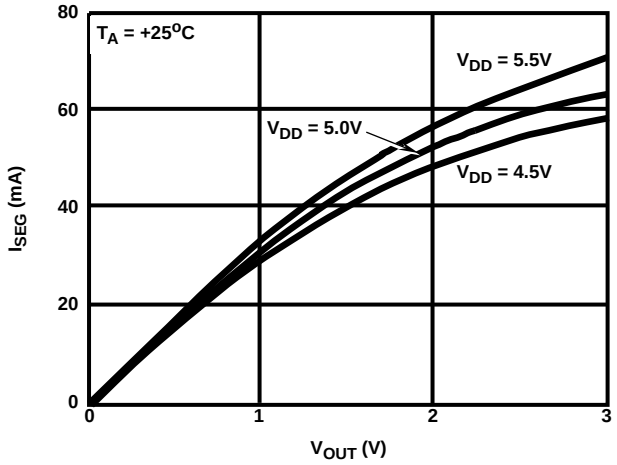

FIGURE 5. ICM7216A TYPICAL I_{SEG} vs V_{OUT}

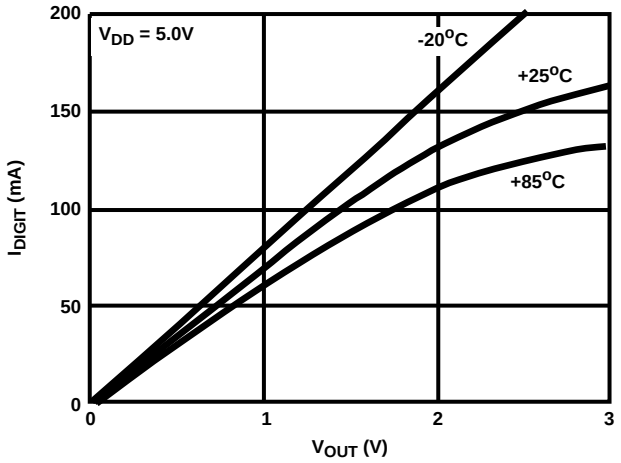

FIGURE 6. ICM7216B & ICM7216D TYPICAL I_{DIGIT} vs V_{OUT}

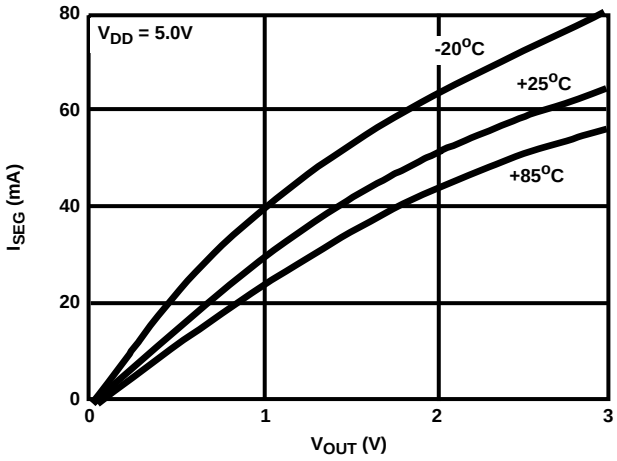

FIGURE 7. ICM7216A TYPICAL I_{SEG} vs V_{OUT}

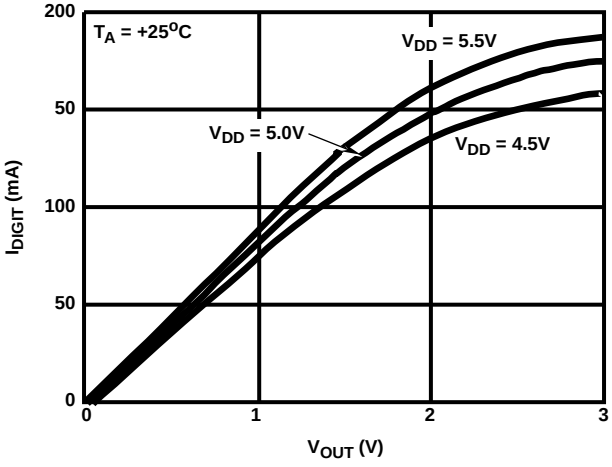

FIGURE 8. ICM7216B & ICM7216D TYPICAL I_{DIGIT} vs V_{OUT}

Description

INPUTS A and B

INPUTS A and B are digital inputs with a typical switching threshold of 2.0V at V_{DD} = 5.0V. For optimum performance the peak-to-peak input signal should be at least 50% of the supply voltage and centered about the switching voltage. When these inputs are being driven from TTL logic, it is desirable to use a pullup resistor. The circuit counts high to low transitions at both inputs. (INPUT B is available only on lCM7216A and lCM7216B).

Note that the amplitude of the input should not exceed the device supply (above the V_{DD} and below the V_{SS}) by more than 0.3V, otherwise the device may be damaged.

Multiplexed Inputs

The FUNCTION, RANGE, CONTROL and EXTERNAL DECIMAL POINT inputs are time multiplexed to select the function desired. This is achieved by connecting the appropriate Digit driver output to the inputs. The function, range and control inputs must be stable during the last half of each digit output, (typically 125µs). The multiplexed inputs are active high for the common anode lCM7216A and active low for the common cathode lCM7216B and lCM7216D.

Noise on the multiplex inputs can cause improper operation. This is particularly true when the **unit counter** mode of operation is selected, since changes in voltage on the digit drivers can be capacitively coupled through the LED diodes to the multiplex inputs. For maximum noise immunity, a 10kΩ resistor should be placed in series with the multiplexed inputs as shown in the application circuits.

Table 1 shows the functions selected by each digit for these inputs.

TABLE 1. MULTIPLEXED INPUT FUNCTIONS

	FUNCTION	DIGIT
FUNCTION INPUT (Pin 3, lCM7216A and B Only)	Frequency	D1
	Period	D8
	Frequency Ratio	D2
	Time Interval	D5
	Unit Counter	D4
	Oscillator Frequency	D3
RANGE INPUT, Pin 14	0.01s/1 Cycle	D1
	0.1s/10 Cycles	D2
	1s/100 Cycles	D3
	10s/1K Cycles	D4
CONTROL INPUT, Pin 1	Display Off	D4 and Hold
	Display Test	D8
	1MHz Select	D2
	External Oscillator Enable	D1
	External Decimal Point Enable	D3
External DP INPUT (Pin 13, ICM7216D Only)	Decimal point is output for same digit that is connected to this input.	

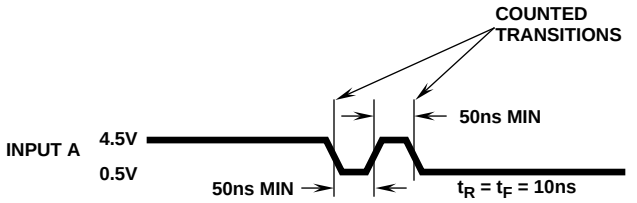

FIGURE 9. WAVEFORM FOR GUARANTEED MINIMUM f_A(MAX) FUNCTION = FREQUENCY, FREQUENCY RATIO, UNIT COUNTER

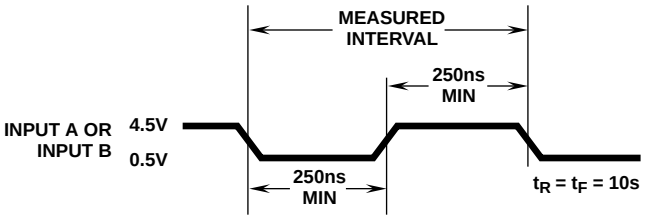

FIGURE 10. WAVEFORM FOR GUARANTEED MINIMUM f_B(MAX) AND f_A(MAX) FOR FUNCTION = PERIOD AND TIME INTERVAL

Function Input

The six functions that can be selected are: **Frequency, Period, Time Interval, Unit Counter, Frequency Ratio** and **Oscillator Frequency.** This input is available on the lCM7216A and lCM7216B only.

The implementation of different functions is done by routing the different signals to two counters, called “Main Counter” and “Reference Counter”. A simplified block diagram of the device for functions realization is shown in Figure 11. Table 2 shows which signals will be routed to each counter in different cases. The output of the Main Counter is the information which goes to the display. The Reference Counter divides its input by 1, 10, 100 and 1000. One of these outputs will be selected through the range selector and drive the enable input of the Main Counter. This means that the Reference Counter, along with its' associated blocks, directs the Main Counter to begin counting and determines the length of the counting period. Note that Figure 11 does not show the complete functional diagram (See the Functional Block Diagram). After the end of each counting period, the output of the Main Counter will be latched and displayed, then the counter will be reset and a new measurement cycle will begin. Any change in the FUNCTION INPUT will stop the present measurement without updating the display and then initiate a new measurement. This prevents an erroneous first reading after the FUNCTION INPUT is changed. In all cases, the 1-0 transitions are counted or timed.

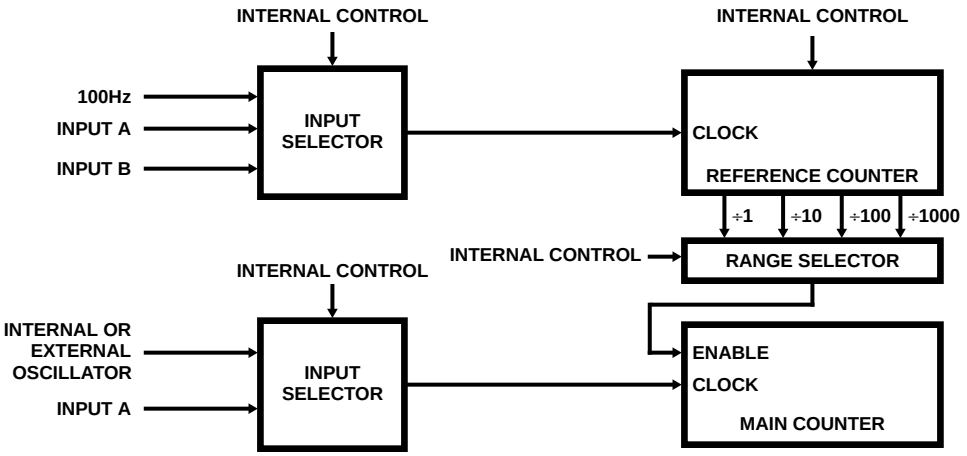

FIGURE 11. SIMPLIFIED BLOCK DIAGRAM OF FUNCTIONS IMPLEMENTATION

TABLE 2. 7216A/B INPUT ROUTING

FUNCTION	MAIN COUNTER	REFERENCE COUNTER
Frequency (f_A)	Input A	100Hz (Oscillator $\div 10^5$ or 10^4)
Period (t_A)	Oscillator	Input A
Ratio (f_A/f_B)	Input A	Input B
Time Interval (A→B)	Oscillator	Input A Input B
Unit Counter (Count A)	Input A	Not Applicable
Osc. Freq. (f_{OSC})	Oscillator	100Hz (Oscillator $\div 10^5$ or 10^4)

Frequency - In this mode input A is counted by the Main Counter for a precise period of time. This time is determined by the time base oscillator and the selected range. For the 10MHz (or 1MHz) time base, the resolutions are 100Hz, 10Hz, 1Hz and 0.1Hz. The decimal point on the display is set for kHz reading.

Period - In this mode, the timebase oscillator is counted by the Main Counter for the duration of 1,10,100 or 1000 (range selected) periods of the signal at input A. A 10MHz timebase gives resolutions of 0.1µs to 0.0001µs for 1000 periods averaging. Note that the maximum input frequency for period measurement is 2.5MHz.

Frequency Ratio - In this mode, the input A is counted by the Main Counter for the duration of 1,10,100 or 1000 (range selected) periods of the signal at input B. The frequency at input A should be higher than input B for meaningful result. The result in this case is unitless and its resolution can go up to 3 digits after decimal point.

Time Interval - In this mode, the timebase oscillator is counted by the Main Counter for the duration of a 1-0 transition of input A until a 1-0 transition of input B. This means input A starts the counting and input B stops it. If other ranges, except 0.01s/1 cycle are selected the sequence of input A and B transitions must happen 10,100 or 1000 times until the display becomes updated; note this when measuring long time intervals to give enough time for measurement completion. The resolution in this mode is the same as for period measurement. See the Time Interval Measurement section also.

Unit Counter - In this mode, the Main Counter is always enabled. The input A is counted by the Main Counter and displayed continuously.

Oscillator Frequency - In this mode, the device makes a frequency measurement on its timebase. This is a self test mode for device functionality check. For 10MHz timebase the display will show 10000.0, 10000.00, 10000.000 and Overflow in different ranges.

Range Input

The RANGE INPUT selects whether the measurement period is made for 1,10,100 or 1000 counts of the Reference Counter. As it is shown in Table 1, this gives different counting windows for frequency measurement and various cycles for other modes of measurement.

In all functional modes except Unit Counter, any change in the RANGE INPUT will stop the present measurement without updating the display and then initiate a new measurement. This prevents an erroneous first reading after the RANGE INPUT is changed.

Control Input

Unlike the other multiplexed inputs, to which only one of the digit outputs can be connected at a time, this input can be tied to different digit lines to select combination of controls. In this case, isolation diodes must be used in digit lines to avoid crosstalk between them (see Figure 17). The direction of diodes depends on the device version, common anode or common cathode. For maximum noise immunity at this input, in addition to the 10K resistor which was mentioned before, a 39pF to 100pF capacitor should also be placed between this input and the V_{DD} or V_{SS} (See Figure 17).

Display Off - To disable the display drivers, it is necessary to tie the D4 line to the CONTROL INPUT and have the HOLD input at V_{DD}. While in Display Off mode, the segments and

digit drivers are all off, leaving the display lines floating, so the display can be shared with other devices. In this mode, the oscillator continues to run with a typical supply current of 1.5mA with a 10MHz crystal, but no measurements are made and multiplexed inputs are inactive. A new measurement cycle will be initiated when the HOLD input is switched to V_{SS}.

Display Test - Display will turn on with all the digits showing 8s and all decimal points on. The display will be blanked if Display Off is selected at the same time.

1MHz Select - The 1MHz select mode allows use of a 1MHz crystal with the same digit multiplex rate and time between measurement as with a 10MHz crystal. This is done by dividing the oscillator frequency by 10^4 rather than 10^5. The decimal point is also shifted one digit to the right in period and time interval, since the least significant digit will be in µs increment rather than 0.1µs increment.

External Oscillator Enable - In this mode, the signal at EXT OSC INPUT is used as a timebase instead of the on-board crystal oscillator (built around the OSC INPUT, OSC OUTPUT inputs). This input can be used for an external stable temperature compensated crystal oscillator or for special measurements with any external source. The on-board crystal oscillator continues to work when the external oscillator is selected. This is necessary to avoid hang-up problems, and has no effect on the chip's functional operation. If the on-board oscillator frequency is less than 1MHz or only the external oscillator is used, THE OSC INPUT MUST BE CONNECTED TO THE EXT OSC INPUT providing the timebase has enough voltage swing for OSC INPUT (See Electrical Specifications). If the external timebase is TTL level a pullup resistor must be used for OSC INPUT. The other way is to put a 22MΩ resistor between OSC INPUT and OSC OUTPUT and capacitively couple the EXT OSC INPUT to OSC INPUT. This will bias the OSC INPUT at its threshold and the drive voltage will need to be only $2V_{P-P}$. The external timebase frequency must be greater than 100kHz or the chip will reset itself to enable the on-board oscillator.

External Decimal Point Enable - In this mode, the EX DP INPUT is enabled (ICM7216D only). A decimal point will be displayed for the digit that its output line is connected to this input (EX DP INPUT). Digit 8 should not be used since it will override the overflow output. Leading zero blanking is effective for the digits to the left of selected decimal point.

Hold Input

Except in the **unit counter mode**, when the HOLD input is at V_{DD}, any measurement in progress (before $\overline{\text{STORE}}$ goes low) is stopped, the main counter is reset and the chip is held ready to initiate a new measurement as soon as HOLD goes low. The latches which hold the main counter data are not updated, so the last complete measurement is displayed. In **unit counter** mode when HOLD input is at V_{DD}, the counter is not stopped or reset, but the display is frozen at that instantaneous value. When HOLD goes low the count continues from the new value in the new counter.

$\overline{\text{RESET}}$ Input

The $\overline{\text{RESET}}$ input resets the main counter, stops any measurement in progress, and enables the main counter latches, resulting in an all zero output. A capacitor to ground will prevent any hang-ups on power-up.

$\overline{\text{MEASUREMENT}}$ $\overline{\text{IN}}$ $\overline{\text{PROGRESS}}$

This output is provided in ICM7216D. It stays low during measurements and goes high for intervals between measurements. It is provided for system interfacing and can drive a low power Schottky TTL or one ECL load if the ECL device is powered from the same supply as ICM7216D.

Decimal Point Position

Table 3 shows the decimal point position for different modes of ICM7216 operation. Note that the digit 1 is the least significant digit. Table 3 is for 10MHz timebase frequency.

Overflow Indication

When overflow happens in any measurement it will be indicated on the decimal point of the digit 8. A separate LED indicator can be used. Figure 12 shows how to connect this indicator.



FIGURE 12. SEGMENT IDENTIFICATION AND DISPLAY FONT

Overflow will be indicated on the decimal point output of digit 8. A separate LED overflow indicator can be connected as follows:

DEVICE	CATHODE	ANODE
ICM7216A	Decimal Point	D8
ICM7216B/D	D8	Decimal Point

TABLE 3. DECIMAL POINT POSITIONS

RANGE	FREQUENCY	PERIOD	FREQUENCY RATIO	TIME INTERVAL	UNIT COUNTER	OSCILLATOR FREQUENCY
0.01s/1 Cycle	D2	D2	D1	D2	D1	D2
0.1s/10 Cycle	D3	D3	D2	D3	D1	D3
1s/100 Cycle	D4	D4	D3	D4	D1	D4
10s/1K Cycle	D5	D5	D4	D5	D1	D5

Time Interval Measurement

When in the **time interval** mode and measuring a single event, the ICM7216A and ICM7216B must first be "primed" prior to measuring the event of interest. This is done by first generating a negative going edge on Channel A followed by a negative going edge on Channel B to start the "measurement interval". The inputs are then primed ready for the measurement. Positive going edges on A and B, before or after the priming, will be needed to restore the original condition.

Priming can be easily accomplished using the circuit in Figure 13.

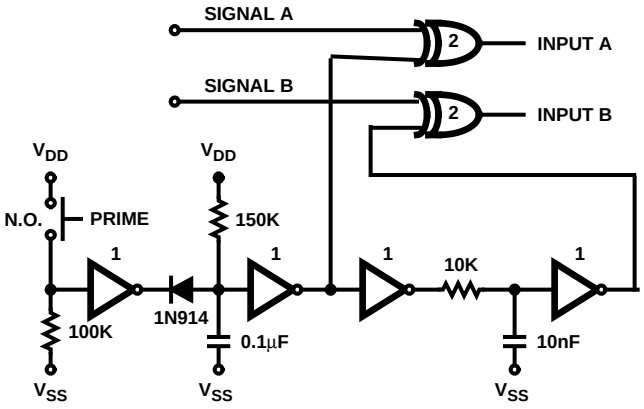

DEVICE	TYPE
1	CD4049B Inverting Buffer
2	CD4070B Exclusive - OR

FIGURE 13. PRIMING CIRCUIT, SIGNALS A & B BOTH HIGH OR LOW

Following the priming procedure (when in single event or 1 cycle range) the device is ready to measure one (only) event.

When timing repetitive signals, it is not necessary to "prime" the ICM7216A and ICM7216B as the first alternating signal states automatically prime the device. See Figure 1.

During any time interval measurement cycle, the ICM7216A and ICM7216B require 200ms following B going low to update all internal logic. A new measurement cycle will not take place until completion of this internal update time.

Oscillator Considerations

The oscillator is a high gain CMOS inverter. An external resistor of 10MΩ to 22MΩ should be connected between the OSCillator INPUT and OUTPUT to provide biasing. The oscillator is designed to work with a parallel resonant 10MHz quartz crystal with a static capacitance of 22pF and a series resistance of less than 35Ω.

For a specific crystal and load capacitance, the required g_M can be calculated as follows:

$$g_M = \omega^2 C_{IN} C_{OUT} R_S \left(1 + \frac{C_O}{C_L}\right)^2$$

where $C_L = \left(\frac{C_{IN} C_{OUT}}{C_{IN} + C_{OUT}}\right)$

C_O = Crystal Static Capacitance

R_S = Crystal Series Resistance

C_{IN} = Input Capacitance

C_{OUT} = Output Capacitance

$\omega = 2\pi f$

The required g_M should not exceed 50% of the g_M specified for the ICM7216 to insure reliable startup. The OSCillator INPUT and OUTPUT pins each contribute about 5pF to C_{IN} and C_{OUT}. For maximum stability of frequency, C_{IN} and C_{OUT} should be approximately twice the specified crystal static capacitance.

In cases where non decade prescalers are used it may be desirable to use a crystal which is neither 10MHz or 1MHz. In that case both the multiplex rate and time between measurements will be different. The multiplex rate is

$f_{MUX} = \frac{f_{OSC}}{2 \times 10^4}$ for 10MHz mode and $f_{MUX} = \frac{f_{OSC}}{2 \times 10^3}$ for the 1MHz mode. The time between measurements is $\frac{2 \times 10^6}{f_{OSC}}$ in the 10MHz mode and $\frac{2 \times 10^5}{f_{OSC}}$ in the 1MHz mode.

The crystal and oscillator components should be located as close to the chip as practical to minimize pickup from other signals. Coupling from the EXTERNAL OSCILLATOR INPUT to the OSCILLATOR OUTPUT or INPUT can cause undesirable shifts in oscillator frequency.

Display Considerations

The display is multiplexed at a 500Hz rate with a digit time of 244µs. An interdigit blanking time of 6µs is used to prevent display ghosting (faint display of data from previous digit superimposed on the next digit). Leading zero blanking is provided, which blanks the left hand zeroes after decimal point or any non zero digits. Digits to the right of the decimal point are always displayed. The leading zero blanking will be disabled when the Main Counter overflows.

The ICM7216A is designed to drive common anode LED displays at peak current of 25mA/segment, using displays with V_F = 1.8V at 25mA. The average DC current will be over 3mA under these conditions. The ICM7216B and ICM7216D are designed to drive common cathode displays at peak current of 15mA/segment using displays with V_F = 1.8V at 15mA. Resistors can be added in series with the segment drivers to limit the display current in very efficient displays, if required. The Typical Performance Curves show the digit and segment currents as a function of output voltage.

To get additional brightness out of the displays, V_{DD} may be increased up to 6.0V. However, care should be taken to see that maximum power and current ratings are not exceeded.

The segment and digit outputs in ICM7216's are not directly compatible with either TTL or CMOS logic when driving LEDs. Therefore, level shifting with discrete transistors may be required to use these outputs as logic signals.

Accuracy

In a Universal Counter crystal drift and quantization effects cause errors. In **frequency, period** and **time interval** modes, a signal derived from the oscillator is used in either the Reference Counter or Main Counter. Therefore, in these modes an error in the oscillator frequency will cause an identical error in the measurement. For instance, an oscillator temperature coefficient of $20_{PPM}/^{o}C$ will cause a measurement error of $20_{PPM}/^{o}C$.

In addition, there is a quantization error inherent in any digital measurement of ±1 count. Clearly this error is reduced by displaying more digits. In the **frequency** mode the maximum accuracy is obtained with high frequency inputs and in **period** mode maximum accuracy is obtained with low frequency inputs (as can be seen in Figure 14). In **time interval** measurements there can be an error of 1 count per interval. As a result there is the same inherent accuracy in all ranges as shown in Figure 15. In **frequency ratio** measurement can be more accurately obtained by averaging over more cycles of INPUT B as shown in Figure 16.

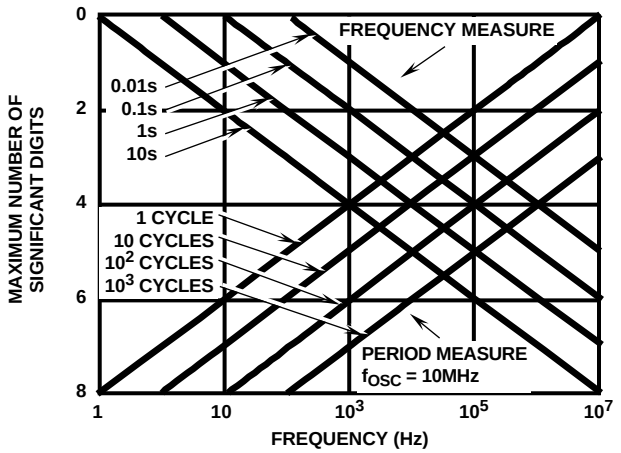

FIGURE 14. MAXIMUM ACCURACY OF FREQUENCY AND PERIOD MEASUREMENTS DUE TO LIMITATIONS OF QUANTIZATION ERRORS

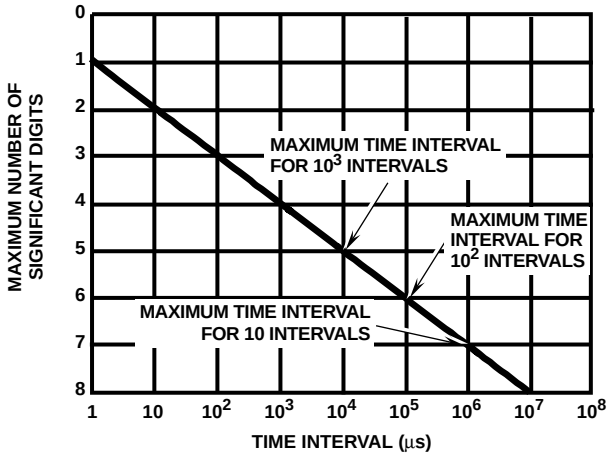

FIGURE 15. MAXIMUM ACCURACY OF TIME INTERVAL MEASUREMENT DUE TO LIMITATIONS OF QUANTIZATION ERRORS

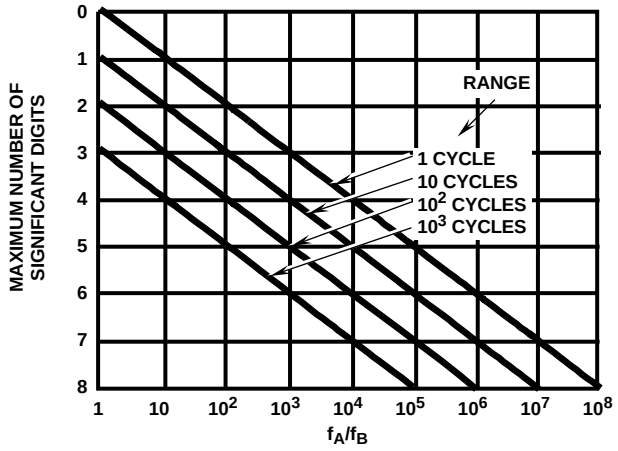

FIGURE 16. MAXIMUM ACCURACY FOR FREQUENCY RATIO MEASUREMENT DUE TO LIMITATION OF QUANTIZATION ERRORS

Test Circuit

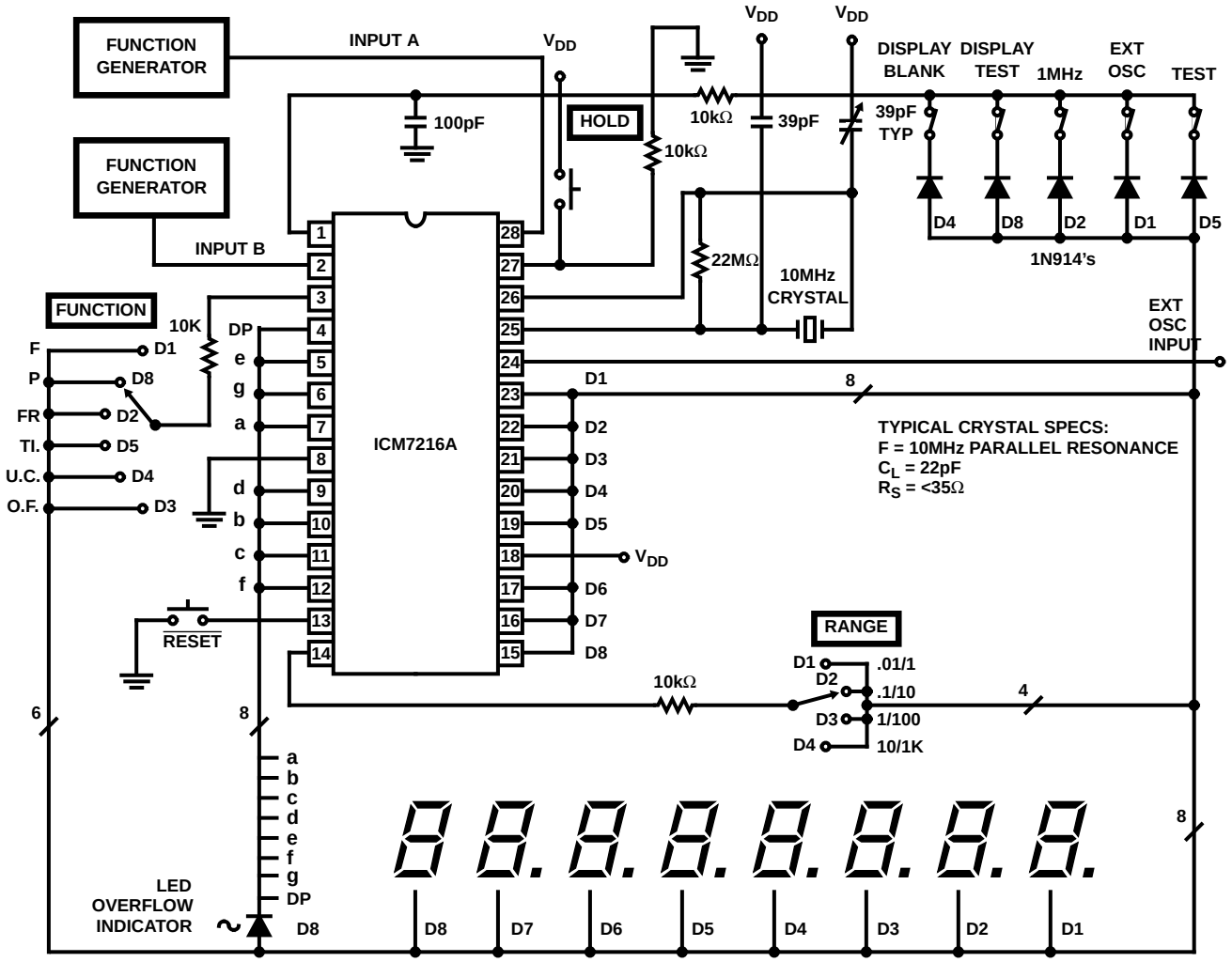

FIGURE 17. TEST CIRCUIT (ICM7216A SHOWN, OTHERS SIMILAR)

Typical Applications

The ICM7216 has been designed for use in a wide range of Universal and Frequency counters. In many cases, prescalers will be required to reduce the input frequencies to under 10MHz. Because INPUT A and INPUT B are digital inputs, additional circuitry is often required for input buffering, amplification, hysteresis, and level shifting to obtain a good digital signal.

The ICM7216A or ICM7216B can be used as a minimum component complete Universal Counter as shown in Figure 18. This circuit can use input frequencies up to 10MHz at INPUT A and 2MHz at INPUT B. If the signal at INPUT A has a very low duty cycle it may be necessary to use a 74LS121 monostable multivibrator or similar circuit to stretch the input pulse width to be able to guarantee that it is at least 50ns in duration.

To measure frequencies up to 40MHz the circuit of Figure 19 can be used. To obtain the correct measured value, it is necessary to divide the oscillator frequency by four as well as the input frequency. In doing this the time between measurements is also lengthened to 800ms and the display multiplex rate is decreased to 125Hz.

If the input frequency is prescaled by ten, then the oscillator can remain at 10MHz or 1MHz, but the decimal point must be moved one digit to the right. Figure 20 shows a frequency counter with a ÷10 prescaler and an ICM7216A. Since there is no external decimal point control with the ICM7216A and ICM7216B, the decimal point may be controlled externally with additional drivers as shown in Figure 20. Alternatively, if separate anodes are available for the decimal points, they can be wired up to the adjacent digit anodes. Note that there can be one zero to the left of the decimal point since the internal leading zero blanking cannot be changed. In Figure 21 additional logic has been added to count the input directly in **period** mode for maximum accuracy. In Figures 20 and 21, INPUT A comes from Q_C of the prescaler rather than Q_D to obtain an input duty cycle of 40%.

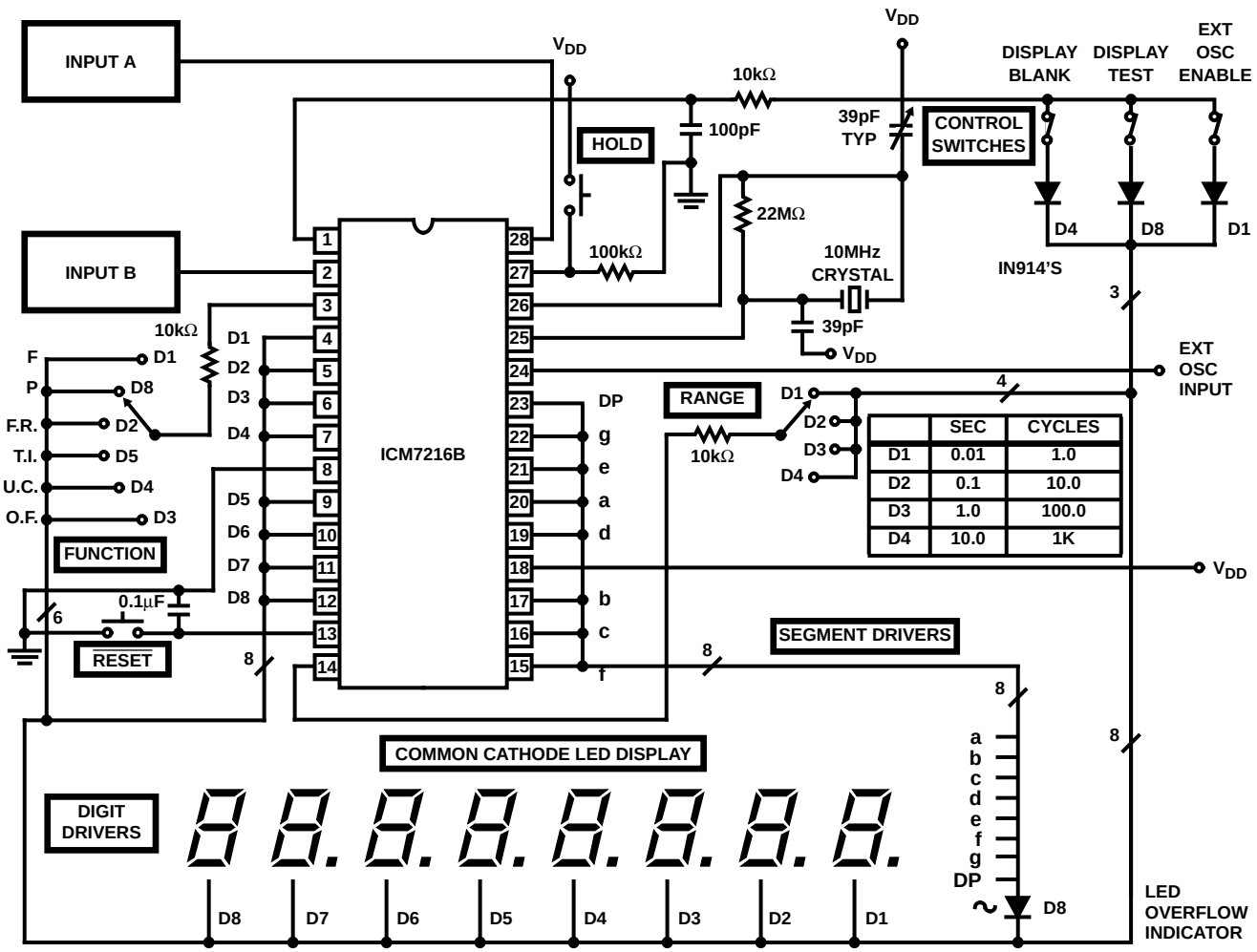

FIGURE 18. 10MHz UNIVERSAL COUNTER

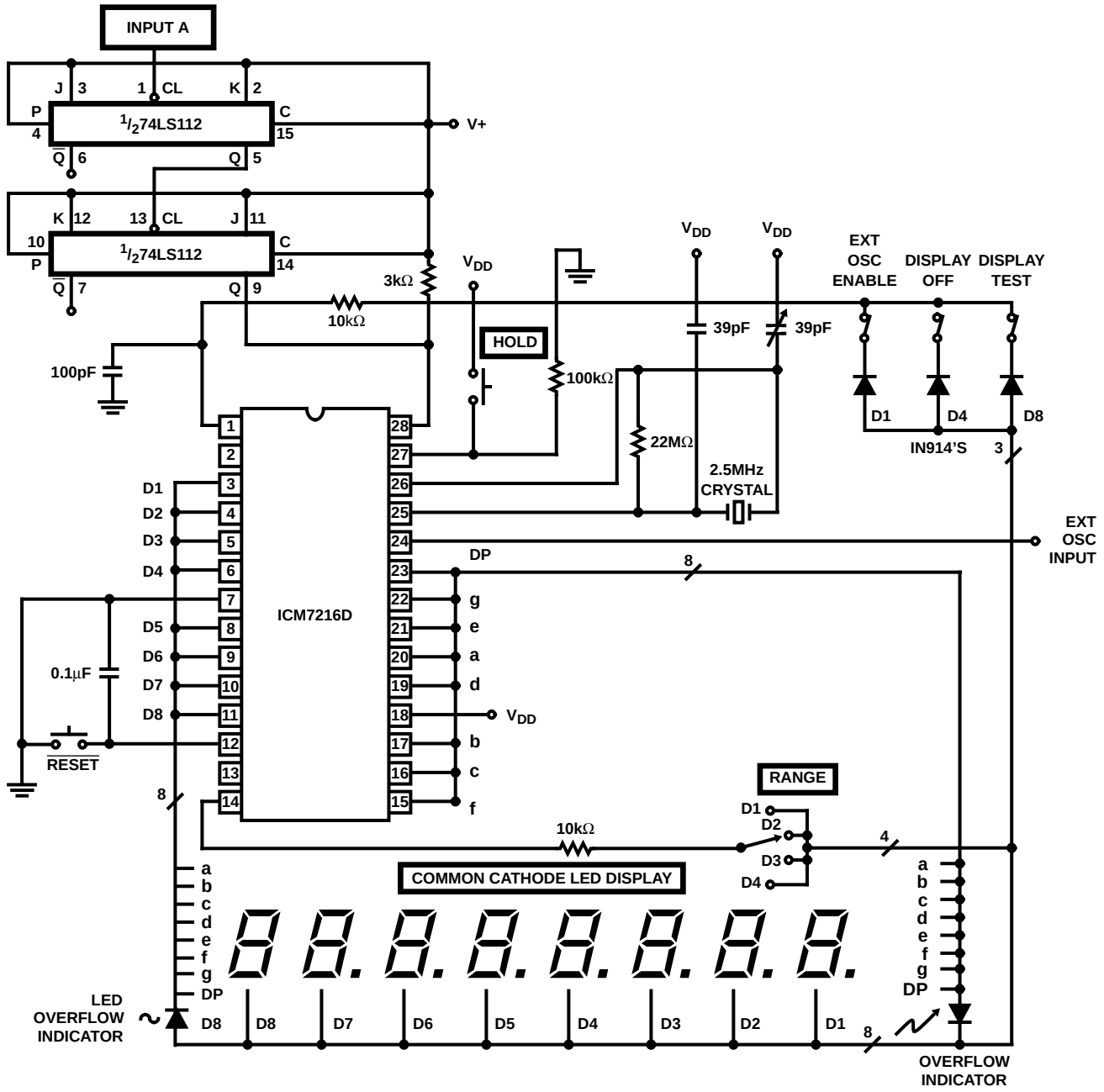

FIGURE 19. 40MHz FREQUENCY COUNTER

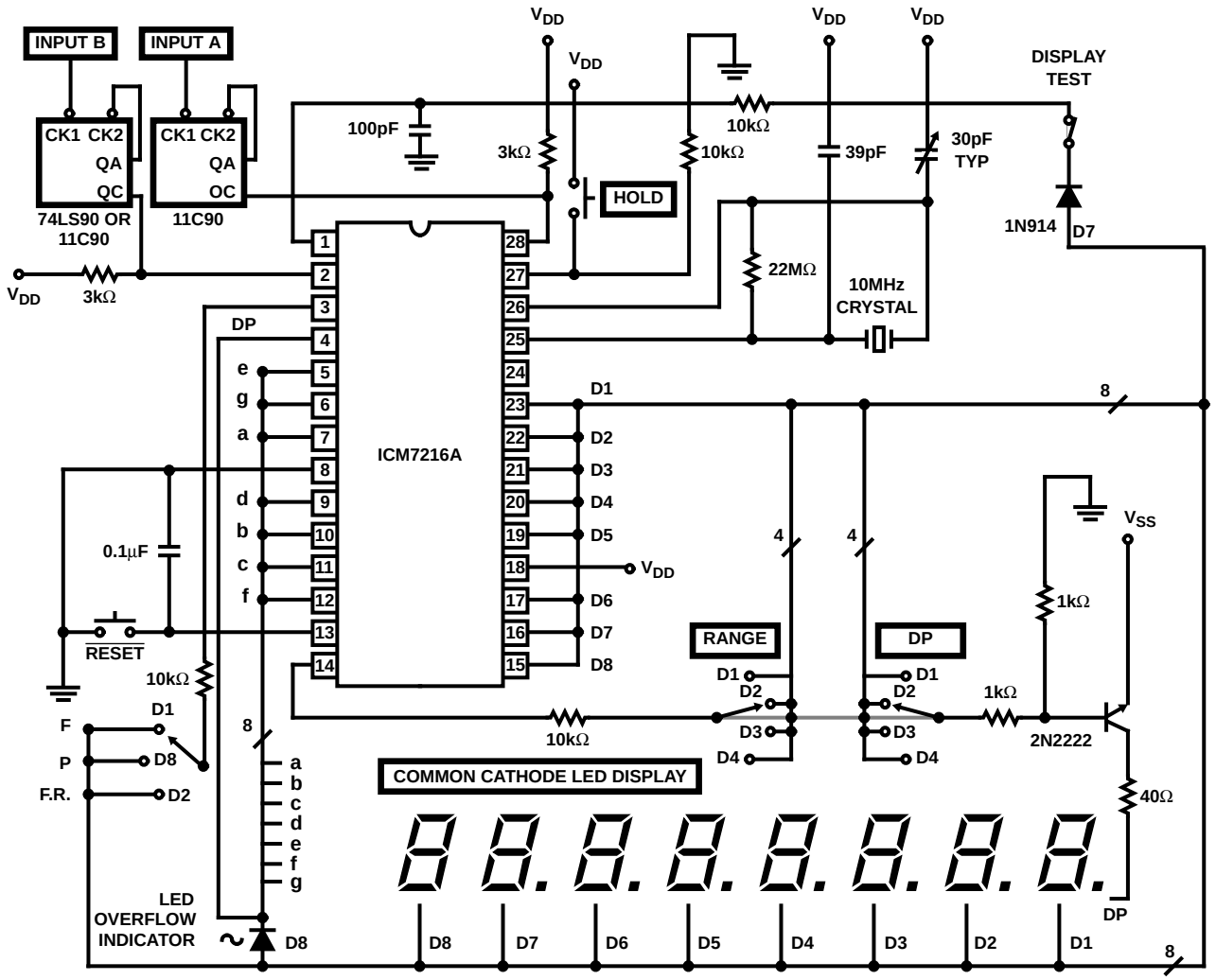

FIGURE 20. 100MHz MULTIFUNCTION COUNTER

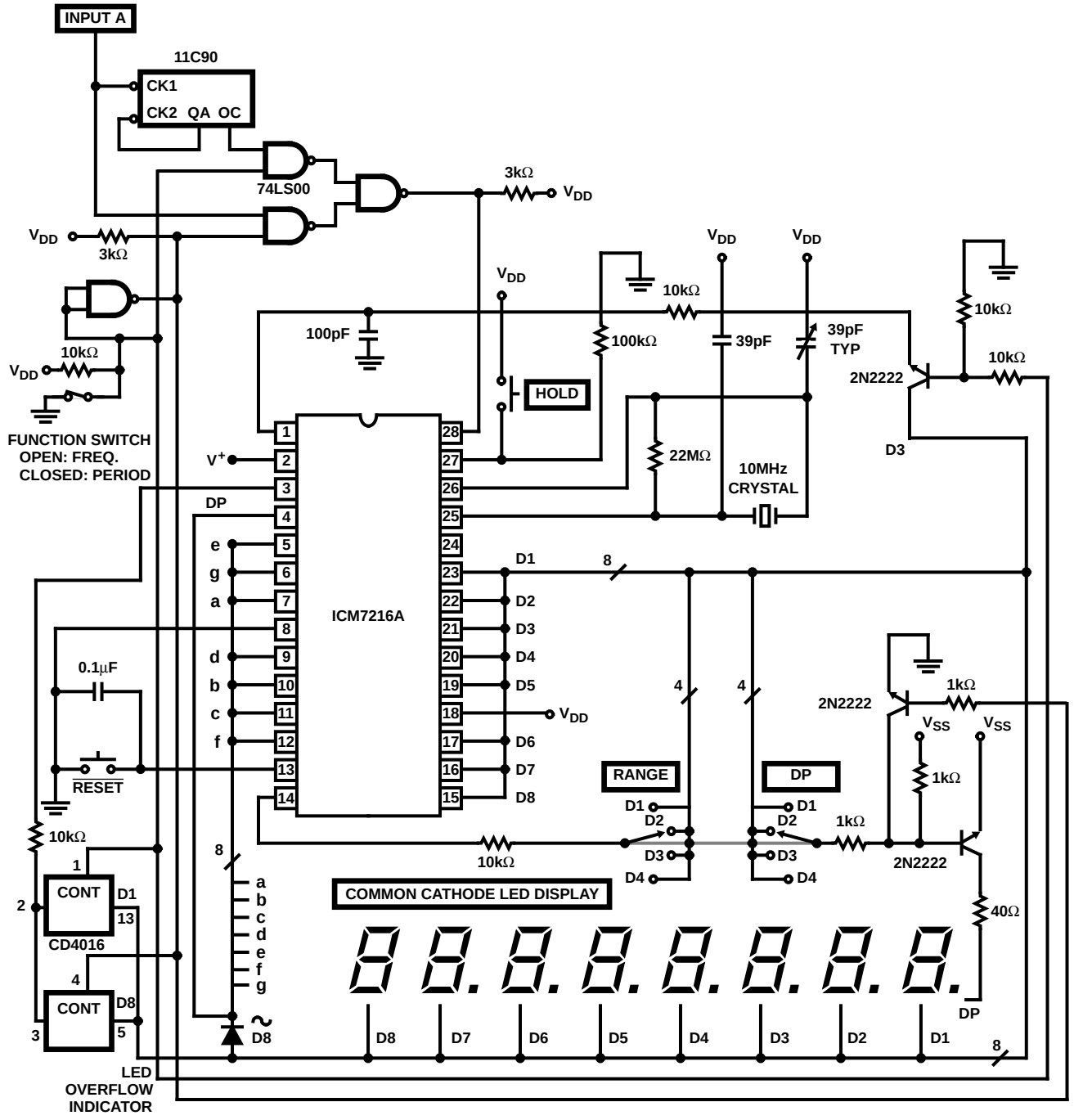

FIGURE 21. 100MHz FREQUENCY, 2MHz PERIOD COUNTER