Product data sheet

Specifications

Motor circuit breaker, TeSys GV4, 3P, 2A, Icu 50kA, thermal magnetic, Everlink terminals

GV4PE02N

Main

Range	TeSys Deca TeSys Deca
Range of product	TeSys GV4
Device short name	GV4PE
Product name	TeSys GV4 TeSys Deca
Product or component type	Motor circuit breaker
Device application	Motor protection
Trip unit technology	Electronic Thermal-magnetic

Complementary

Poles description	3P
Utilisation category	Category A conforming to IEC 60947-2 AC-3 conforming to IEC 60947-4-1
Operating position	Any position
Motor power kW	0.25 kW at 400...415 V AC 50/60 Hz 0.37 kW at 400...415 V AC 50/60 Hz 0.55 kW at 400...415 V AC 50/60 Hz 0.75 kW at 400...415 V AC 50/60 Hz 0.37 kW at 500 V AC 50/60 Hz 0.55 kW at 500 V AC 50/60 Hz 0.75 kW at 500 V AC 50/60 Hz 1.1 kW at 500 V AC 50/60 Hz 0.55 kW at 660...690 V AC 50/60 Hz 0.75 kW at 660...690 V AC 50/60 Hz 1.1 kW at 660...690 V AC 50/60 Hz 1.5 kW at 660...690 V AC 50/60 Hz
Breaking capacity	100 kA Icu at 220...240 V AC 50/60 Hz conforming to IEC 60947-2 50 kA Icu at 380...415 V AC 50/60 Hz conforming to IEC 60947-2 50 kA Icu at 440 V AC 50/60 Hz conforming to IEC 60947-2 15 kA Icu at 525 V AC 50/60 Hz conforming to IEC 60947-2 65 kA at 208Y/120 V AC 50/60 Hz conforming to UL 60947 65 kA at 240 V AC 50/60 Hz conforming to UL 60947 35 kA at 480Y/277 V AC 50/60 Hz conforming to UL 60947 8 kA Icu at 660...690 V AC 50/60 Hz conforming to IEC 60947-2 25 kA Icu at 500 V AC 50/60 Hz conforming to IEC 60947-2 18 kA at 600Y/347 V AC 50/60 Hz conforming to UL 60947
Control type	Toggle
[In] rated current	2 A
Magnetic tripping current	34 A
[Ue] rated operational voltage	690 V AC 50/60 Hz conforming to IEC 60947-2

Disclaimer: This documentation is not intended as a substitute for and is not to be used for determining suitability or reliability of these products for specific user applications

[Ui] rated insulation voltage	800 V AC 50/60 Hz conforming to IEC 60947-2
[Ith] conventional free air thermal current	115 A conforming to IEC 60947-4-1
[Uimp] rated impulse withstand voltage	8 kV conforming to IEC 60947-2
Power dissipation per pole	4.6 W
Mechanical durability	40000 cycles
Electrical durability	40000 cycles for AC-3 at 440 V In/2 40000 cycles for AC-3 at 440 V In
Maximum operating rate	25 cyc/h
Rated duty	Continuous conforming to IEC 60947-4-1
Connections - terminals	EverLink BTR screw connectors (top) 1 cable(s) 1.5…70 mm² - solid EverLink BTR screw connectors (top) 1 cable(s) 1.5…50 mm² - flexible EverLink BTR screw connectors (bottom) 1 cable(s) 2.5…95 mm² - solid EverLink BTR screw connectors (bottom) 1 cable(s) 2.5…70 mm² - flexible
Tightening torque	9 N.m for cable 16…95 mm² 5 N.m for cable 1.5…10 mm²
Mechanical robustness	Vibrations: +/- 1 mm 2...13.2 Hz conforming to IEC 60068-2-6 Vibrations: 0.7 gn 13.2...100 Hz conforming to IEC 60068-2-6 Shocks: 15 gn 11 ms conforming to IEC 60068-2-27
Phase failure sensitivity	Yes conforming to IEC 60947-4-1
Height	155 mm
Width	81 mm
Depth	116 mm
Net weight	1.45 kg
Colour	Grey (RAL 7016)
Suitability for isolation	Yes conforming to IEC 60947-1

Environment

Standards	CSA C22.2 No 60947-4-1 UL 60947-4-1 EN/IEC 60947-4-1 EN/IEC 60947-2
Product certifications	IEC UL CSA CCC EAC ATEX EU-RO MR
Climatic withstand	conforming to IACS E10
IK degree of protection	IK07 conforming to IEC 62262
Pollution degree	3
IP degree of protection	IP40 conforming to IEC 60529
Ambient air temperature for storage	-50…85 °C
Fire resistance	960 °C conforming to IEC 60695-2-11
Operating altitude	5000 m
Ambient air temperature for operation	-25…70 °C

Packing Units

Unit Type of Package 1	PCE
Number of Units in Package 1	1

Package 1 Weight	1.72 kg
Package 1 Height	17.0 cm
Package 1 width	11.0 cm
Package 1 Length	22.0 cm
Unit Type of Package 2	S03
Number of Units in Package 2	5
Package 2 Weight	14.0 kg
Package 2 Height	30.0 cm
Package 2 width	30.0 cm
Package 2 Length	40.0 cm

Offer Sustainability

Sustainable offer status	Green Premium product
REACh Regulation	REACh Declaration
EU RoHS Directive	Compliant EU RoHS Declaration
Mercury free	Yes
RoHS exemption information	Yes
China RoHS Regulation	China RoHS declaration Product out of China RoHS scope. Substance declaration for your information
Environmental Disclosure	Product Environmental Profile
Circularity Profile	End of Life Information
WEEE	The product must be disposed on European Union markets following specific waste collection and never end up in rubbish bins
PVC free	Yes
Halogen content performance	Halogen free plastic parts product

Contractual warranty

Warranty	18 months

Thermal-Magnetic Tripping Curves for GV4P, GV4PE, GV4PEM

Average Operating Times at 20 °C Related to Multiples of the Setting Current

Hot state

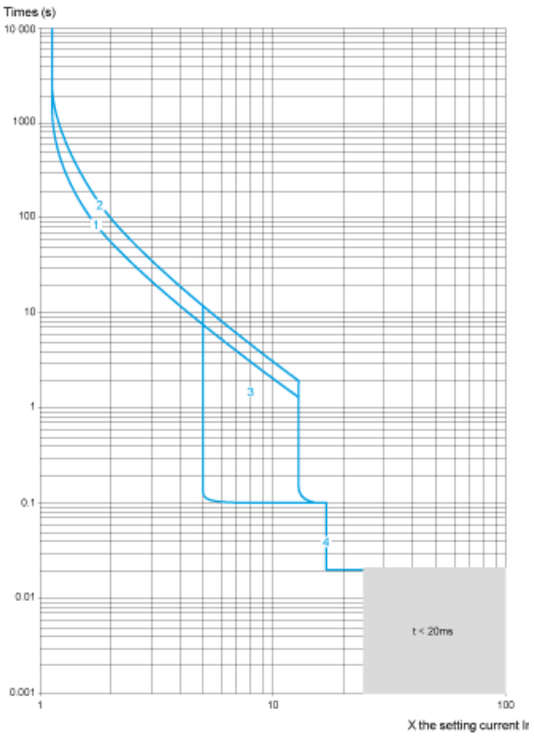

1 Class 10
2 Class 20
3 Isd = 5...13x Ir
4 Ii = 17 In

Cold state

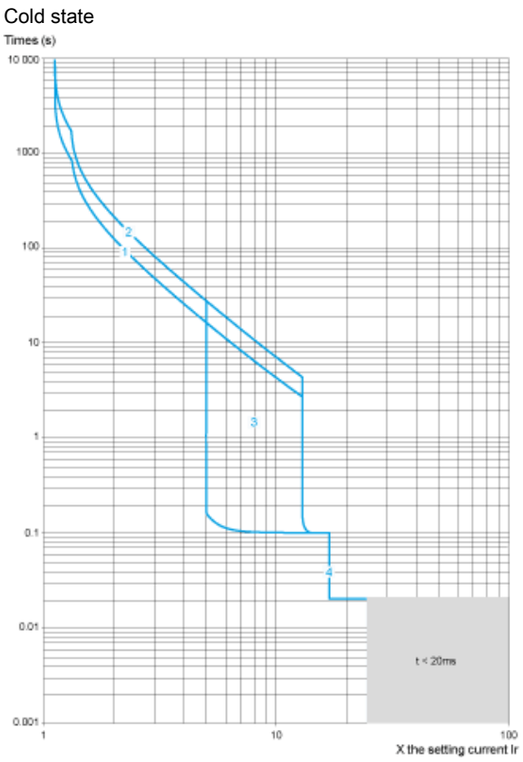

1 Class 10
2 Class 20
3 Isd = 5...13x Ir
4 Ii = 17 In

Current Limitation on Short-Circuit for GV4P, GV4PE, GV4PEM (3-Phase 400/415 V)

Dynamic Stress

I peak = f (prospective Isc) at 1.05 Ue = 435 V

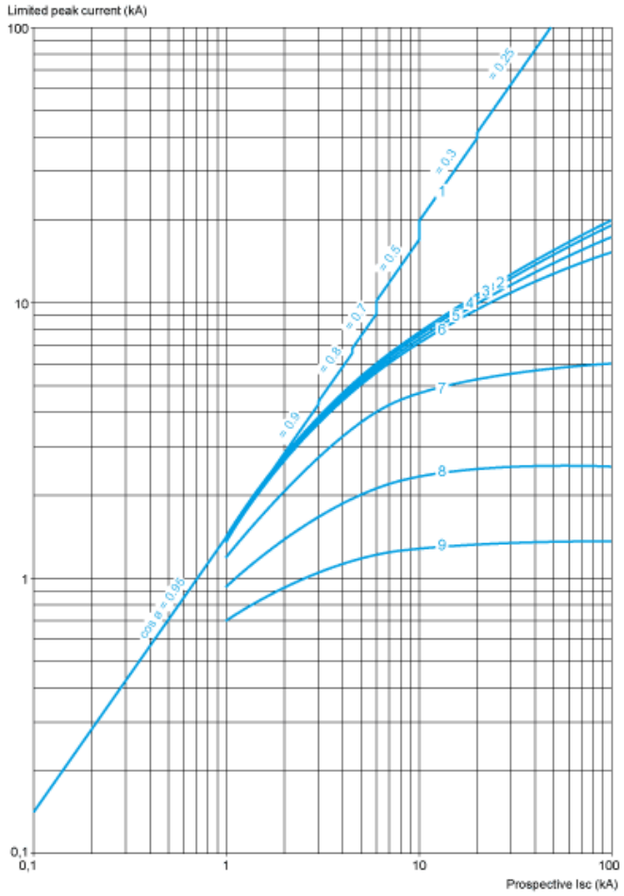

1	Maximum peak current
2	GV4P115
3	GV4P80
4	GV4P50
5	GV4P25
6	GV4P12
7	GV4P07
8	GV4P03
9	GV4P02

Thermal Limit on Short-Circuit for GV4P, GV4PE, GV4PEM

Thermal Limit in $kA^2$2s in the Magnetic Operating Zone

Sum of I^2dt = f (prospective Isc) at 1.05 Ue = 435 V

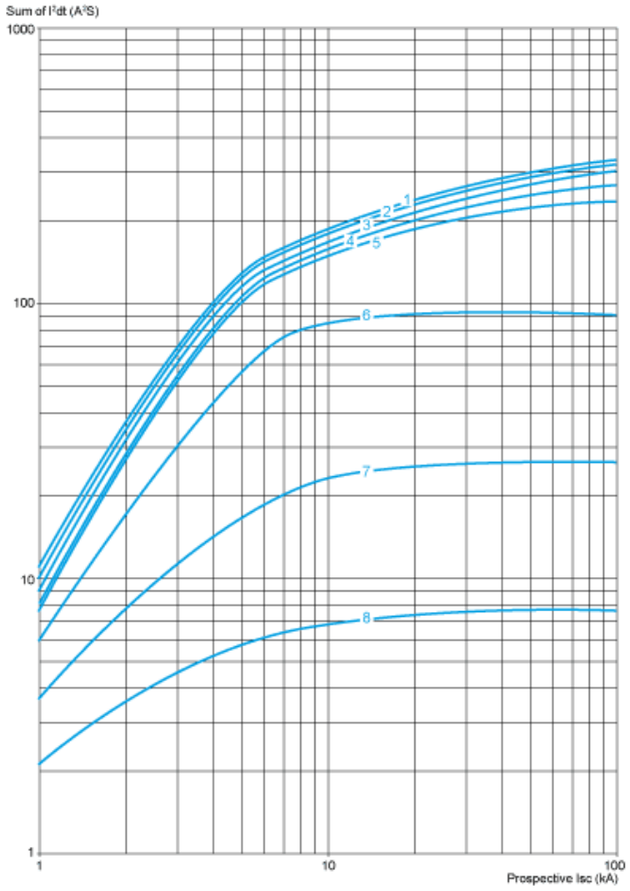

1	GV4P115
2	GV4P80
3	GV4P50
4	GV4P25
5	GV4P12
6	GV4P07
7	GV4P03
8	GV4P02

GV4 with Toggle: GV4LE, GV4PE, GV4PEM

With EverLink® Connector

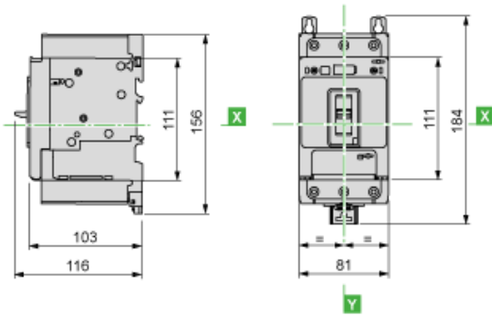

With Crimp Lug Connector

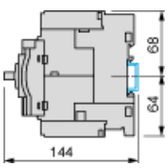

GV4 with Rotary Handle: GV4L, GV4P, or GV4LE, GV4PE, GV4PEM with GV4ADN01, GV4ADN02 Direct Mounting Rotary Handle

Dimensions

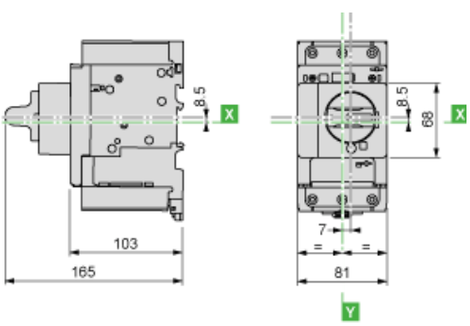

GV4L, GV4P, GV4LE, GV4PE, GV4PEM

Panel Mounting with M4 Screws

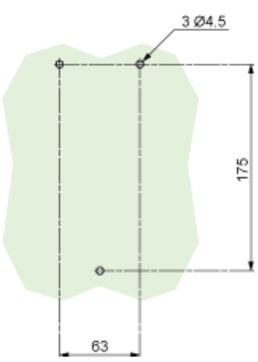

Door Cut-Out for Rotary Handle

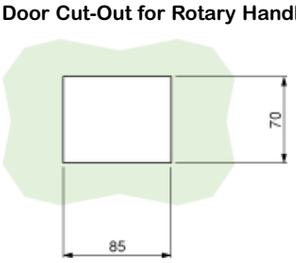

Minimum Safety Clearance

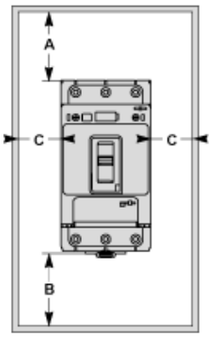

Toggle-type, rotary handle-type: identical clearance values.

Safety Clearance (mm)						
	Painted Sheet Metal			Bare Sheet Metal		
	A	B	C	A	B	C
No accessory	30	0	0	40	0	5
Interphase barriers	0	0	0	0	0	5
Long terminal shield	0	0	0	0	0	5

Magnetic Motor Circuit Breakers
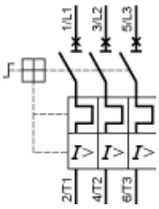
GV4P, GV4PE, GV4PEM