VDR Metal Oxide Varistors Ultra Surge High Operating Temperature 125 °C



LINKS TO ADDITIONAL RESOURCES

3D Models | Design Tools | SPICE Models

QUICK REFERENCE DATA		
PARAMETER	VALUE	UNIT
Maximum continuous voltage in operating temperature range:		
RMS	115 to 680	V
DC	150 to 895	V
Maximum non-repetitive transient current I_{NRP} (8 x 20 µs)	1800 to 13 000	A
Maximum energy (10/1000 µs)	19 to 720	J
Detailed specification	Based on IEC 61051-1 IEC 61051-2 IEC 61051-2-2	
Storage temperature	-40 to +150	°C
Operating temperature	-40 to +125	°C

ORDERING INFORMATION

The varistors are available in a number of packaging options:

- Bulk
- On tape on reel
- On tape in ammopack

The basic ordering code for each option is given in tables titled Varistors on Tape on Reel, Varistors on Tape in Ammopack, and Varistors in Bulk. To complete the catalog number and to determine the required operating parameters, see Electrical Data and Ordering Information table.

Note

- Special lead-configuration as inside or outside crimped leads available upon request

AGENCY APPROVALS

- cUL certificate
- ULus certificate
- VDE certificate

Note

- Agency approval documents, please see: www.vishay.com/ppg?29185&documents

FEATURES

- Low β high purity zinc oxide disc
- Halogen free high temperature resistant silicone coated
- Straight or kinked leads
- Ultra high current surge/size ratio capability up to 13 kA for US20 types
- Certified for operation up to 125 °C according to UL 1449 edition 4, VDE/IEC 61051-1/2
- Material categorization: for definitions of compliance please see www.vishay.com/doc?99912

Pb-free

e3

RoHS COMPLIANT

HALOGEN FREE

APPLICATION

- Overvoltage and transient voltage protection

DESCRIPTION

The varistors consist of a disc of low-ß ceramic material with two solid copper leads (US20 types only) or copper clad steel wire. The wires have a matte tin plating. They are coated with UL 94 V-0 approved silicone lacquer, which provides electrical, mechanical and climatic protection.

MOUNTING

The varistors are suitable for hand-mounting (bulk) or automatic pick and place mounting (T and R). The parts can be connected by wave soldering and pin-in-paste reflow soldering under defined process conditions. Bending of the leads for different angle placement is not recommended.

Typical Soldering

235 °C, duration: 5 s (Pb-bearing)
245 °C, duration: 5 s (lead (Pb)-free)

Resistance to Soldering Heat

260 °C, duration: 10 s max.

MARKING

The varistors are marked with the following information:

- Maximum continuous RMS voltage with - U suffix
- Series numbers
  - 572 for VDRUS07
  - 573 for VDRUS10
  - 575 for VDRUS14
  - 576 for VDRUS20
- Manufacture logo
- Date of manufacture (YYWW)
- Safety marks on VDRUS10-14-20 types

INFLAMMABILITY

The varistors are passive non-flammable. The encapsulation is made of flame resistant silicone in accordance with UL 94 V-0.

For technical questions, contact: nlr@vishay.com

THIS DOCUMENT IS SUBJECT TO CHANGE WITHOUT NOTICE. THE PRODUCTS DESCRIBED HEREIN AND THIS DOCUMENT ARE SUBJECT TO SPECIFIC DISCLAIMERS, SET FORTH AT www.vishay.com/doc?91000

ELECTRICAL DATA AND ORDERING INFORMATION

MAXIMUM CONTINUOUS VOLTAGE		VOLTAGE AT 1 mA (3)	MAXIMUM VOLTAGE AT STATED CURRENT		MAXIMUM ENERGY (4) (10 x 1000 µs)	MAXIMUM NON-REP. TRANSIENT CURRENT (5) I_{NRP} (8 x 20 µs)	NOMINAL DISCHARGE CURRENT (7)	TYPICAL CAPACITANCE AT 1 kHz	T (MAX.)	E	CATALOG NUMBERS (1)
RMS (2) (V)	DC (V)	(V)	V (V)	I (A)	(J)	(A)	(kA)	(pF)	(mm)	(mm)	SAP (6)
115	150	180	300	10.0	19	1800	1	390	3.6	0.9 ± 0.3	VDRUS07M115xyE
			300	25.0	47	4500	2	680	4.0	1.1 ± 0.3	VDRUS10T115xyE
			300	50.0	65	8000	3	1320	4.0	1.1 ± 0.3	VDRUS14X115xyE
			300	100.0	152	13 000	5	2640	4.4	1.3 ± 0.3	VDRUS20Z115ByE
130	170	205	340	10.0	21	1800	1	320	3.8	1.0 ± 0.3	VDRUS07M130xyE
			340	25.0	52	4500	2	580	4.3	1.2 ± 0.3	VDRUS10T130xyE
			340	50.0	82	8000	3	1050	4.3	1.2 ± 0.3	VDRUS14X130xyE
			340	100.0	175	13 000	5	2100	4.8	1.4 ± 0.3	VDRUS20Z130ByE
140	180	220	360	10.0	23	1800	1	290	3.9	1.0 ± 0.3	VDRUS07M140xyE
			360	25.0	58	4500	2	540	4.3	1.2 ± 0.3	VDRUS10T140xyE
			360	50.0	90	8000	3	950	4.3	1.2 ± 0.3	VDRUS14X140xyE
			360	100.0	185	13 000	5	1900	4.8	1.5 ± 0.3	VDRUS20Z140ByE
150	200	240	395	10.0	25	1800	1	270	4.1	1.1 ± 0.3	VDRUS07M150xyE
			395	25.0	64	4500	2	490	4.3	1.3 ± 0.3	VDRUS10T150xyE
			395	50.0	98	8000	3	850	4.3	1.3 ± 0.3	VDRUS14X150xyE
			395	100.0	198	13 000	5	1700	4.8	1.5 ± 0.3	VDRUS20Z150ByE
175	225	275	455	10.0	28	1800	1	230	4.1	1.3 ± 0.3	VDRUS07M175xyE
			455	25.0	67	4500	2	430	4.9	1.5 ± 0.3	VDRUS10T175xyE
			455	50.0	116	8000	3	750	4.9	1.5 ± 0.3	VDRUS14X175xyE
			455	100.0	220	13 000	5	1500	4.9	1.7 ± 0.3	VDRUS20Z175ByE
195	250	300	505	10.0	32	1800	1	210	4.3	1.4 ± 0.8	VDRUS07M195xyE
			505	25.0	70	4500	2	380	5.1	1.6 ± 0.8	VDRUS10T195xyE
			505	50.0	128	8000	3	690	5.1	1.6 ± 0.8	VDRUS14X195xyE
			505	100.0	245	13 000	5	1350	5.1	1.9 ± 0.8	VDRUS20Z195ByE
210	275	330	550	10.0	34	1800	1	190	4.4	1.6 ± 0.8	VDRUS07M210xyE
			550	25.0	72	4500	2	350	5.3	1.8 ± 0.8	VDRUS10T210xyE
			550	50.0	140	8000	3	610	5.3	1.8 ± 0.8	VDRUS14X210xyE
			550	100.0	268	13 000	5	1250	5.3	2.0 ± 0.8	VDRUS20Z210ByE
230	300	360	595	10.0	37	1800	1	170	4.6	1.7 ± 0.8	VDRUS07M230xyE
			595	25.0	76	4500	2	320	5.4	1.9 ± 0.8	VDRUS10T230xyE
			595	50.0	158	8000	3	540	5.4	1.9 ± 0.8	VDRUS14X230xyE
			595	100.0	315	13 000	5	1100	5.4	2.2 ± 0.8	VDRUS20Z230ByE
250	320	390	650	10.0	40	1800	1	160	4.8	1.9 ± 0.8	VDRUS07M250xyE
			650	25.0	82	4500	2	300	5.5	2.1 ± 0.8	VDRUS10T250xyE
			650	50.0	170	8000	3	480	5.5	2.1 ± 0.8	VDRUS14X250xyE
			650	100.0	350	13 000	5	960	5.5	2.3 ± 0.8	VDRUS20Z250ByE
275	350	430	710	10.0	46	1800	1	140	4.9	2.0 ± 0.8	VDRUS07M275xyE
			710	25.0	93	4500	2	270	6.3	2.2 ± 0.8	VDRUS10T275xyE
			710	50.0	185	8000	3	440	5.3	2.2 ± 0.8	VDRUS14X275xyE
			710	100.0	380	13 000	5	900	5.8	2.5 ± 0.8	VDRUS20Z275ByE
300	385	470	775	10.0	49	1800	1	130	5.1	2.2 ± 0.8	VDRUS07M300xyE
			775	25.0	99	4500	2	240	6.5	2.4 ± 0.8	VDRUS10T300xyE
			775	50.0	205	8000	3	400	5.5	2.4 ± 0.8	VDRUS14X300xyE
			775	100.0	405	13 000	5	810	5.9	2.7 ± 0.8	VDRUS20Z300ByE
320	420	510	842	10.0	54	1800	1	120	5.5	2.4 ± 0.8	VDRUS07M320xyE
			842	25.0	107	4500	2	220	7.0	2.6 ± 0.8	VDRUS10T320xyE
			842	50.0	220	8000	3	370	6.0	2.6 ± 0.8	VDRUS14X320xyE
			842	100.0	445	13 000	5	750	6.3	2.9 ± 0.8	VDRUS20Z320ByE

For technical questions, contact: nlr@vishay.com
THIS DOCUMENT IS SUBJECT TO CHANGE WITHOUT NOTICE. THE PRODUCTS DESCRIBED HEREIN AND THIS DOCUMENT ARE SUBJECT TO SPECIFIC DISCLAIMERS, SET FORTH AT www.vishay.com/doc?91000

ELECTRICAL DATA AND ORDERING INFORMATION

MAXIMUM CONTINUOUS VOLTAGE		VOLTAGE AT 1 mA [3]	MAXIMUM VOLTAGE AT STATED CURRENT		MAXIMUM ENERGY [4] (10 x 1000 µs)	MAXIMUM NON-REP. TRANSIENT CURRENT [5] I_{NRP} (8 x 20 µs)	NOMINAL DISCHARGE CURRENT [7]	TYPICAL CAPACITANCE AT 1 kHz	T (MAX.)	E	CATALOG NUMBERS [1]
RMS [2] (V)	DC (V)	(V)	V (V)	I (A)	(J)	(A)	(kA)	(pF)	(mm)	(mm)	SAP [6]
350	460	560	920	10.0	55	1800	1	110	5.8	2.7 ± 0.8	VDRUS07M350xyE
			920	25.0	113	4500	2	200	7.1	2.9 ± 0.8	VDRUS10T350xyE
			920	50.0	240	8000	3	320	6.1	2.9 ± 0.8	VDRUS14X350xyE
			920	100.0	475	13 000	5	650	6.5	3.2 ± 0.8	VDRUS20Z350ByE
385	505	620	1025	10.0	59	1800	1	95	6.0	3.0 ± 0.8	VDRUS07M385xyE
			1025	25.0	125	4500	2	180	7.5	3.2 ± 0.8	VDRUS10T385xyE
			1025	50.0	250	8000	3	280	6.5	3.2 ± 0.8	VDRUS14X385xyE
			1025	100.0	490	13 000	5	570	6.8	3.5 ± 0.8	VDRUS20Z385ByE
420	560	680	1120	10.0	62	1800	1	85	6.3	3.2 ± 0.8	VDRUS07M420xyE
			1120	25.0	128	4500	2	165	7.7	3.4 ± 0.8	VDRUS10T420xyE
			1120	50.0	260	8000	3	250	6.7	3.4 ± 0.8	VDRUS14X420xyE
			1120	100.0	500	13 000	5	510	7.1	3.7 ± 0.8	VDRUS20Z420ByE
460	615	750	1290	5.0	66	1800	1	30	6.6	3.6 ± 0.8	VDRUS07M460xyE
			1240	25.0	134	4500	2	150	8.0	3.8 ± 0.8	VDRUS10T460xyE
			1240	50.0	270	8000	3	225	7.0	3.8 ± 0.8	VDRUS14X460xyE
			1240	100.0	525	13 000	5	450	7.5	4.1 ± 0.8	VDRUS20Z460ByE
485	640	780	1290	10.0	68	1800	1	65	6.8	3.7 ± 0.8	VDRUS07M485xyE
			1290	25.0	139	4500	2	145	8.3	3.9 ± 0.8	VDRUS10T485xyE
			1290	50.0	274	8000	3	220	7.3	3.9 ± 0.8	VDRUS14X485xyE
			1290	100.0	530	13 000	5	400	7.6	4.2 ± 0.8	VDRUS20Z485ByE
510	670	820	1355	10.0	71	1800	1	62	7.0	3.9 ± 0.8	VDRUS07M510xyE
			1355	25.0	146	4500	2	135	8.5	4.1 ± 0.8	VDRUS10T510xyE
			1355	50.0	280	8000	3	220	7.5	4.1 ± 0.8	VDRUS14X510xyE
			1355	100.0	545	13 000	5	400	7.9	4.4 ± 0.8	VDRUS20Z510ByE
550	745	910	1500	25.0	152	4500	2	120	8.9	4.5 ± 0.8	VDRUS10T550xyE
			1500	50.0	295	8000	3	180	7.9	4.5 ± 0.8	VDRUS14X550xyE
			1500	100.0	595	13 000	5	320	8.3	4.9 ± 0.8	VDRUS20Z550ByE
625	825	1000	1650	25.0	170	4500	2	105	9.4	5.0 ± 0.8	VDRUS10T625ByE
			1650	50.0	335	8000	3	165	8.4	5.0 ± 0.8	VDRUS14X625ByE
			1650	100.0	650	13 000	5	280	8.8	5.3 ± 0.8	VDRUS20Z625ByE
680	895	1100	1815	25.0	180	4500	2	80	10.8	5.4 ± 0.8	VDRUS10T680ByE
			1815	50.0	360	8000	3	150	9.8	5.4 ± 0.8	VDRUS14X680ByE
			1815	100.0	720	13 000	5	250	10.2	5.8 ± 0.8	VDRUS20Z680ByE

Notes

(1) The products are certified according to cULus (E332800), and VDE (40051495). See Agency Approval section on page1 for certificate download section

(2) The sinusoidal voltage is assumed as the normal operating condition. If a non-sinusoidal voltage is present, type selection should be based on multiplying the peak voltage by a factor of 0.707

(3) The voltage measured at 1 mA meets the requirements of IEC 61051.
The tolerance on the voltage at 1 mA is ± 10 %

(4) High energy surges are generally of longer duration. The maximum energy for one pulse of 10 x 1000 µs is given as a reference for longer duration pulses. This pulse can be characterized by peak current (I_p) and pulse width t_2 (virtual time of half I_p value). If Vp is the clamping voltage corresponding to I_p, the energy absorbed in the varistor is determined by the formula:
$E = K \times V_p \times I_p \times t_2$ where K is dependent on the value of t_2 (see Peak Current as a Function of Pulse Width drawing)

(5) A current wave of 8 x 20 µs is used as a standard for pulse current and clamping voltage ratings. The maximum non-repetitive transient current is given for one pulse applied during the life of the component

(6) For composition of the SAP part number:

Replace “x” by
- B for bulk type
- T for tape and reel
- A for tape and ammopack

Replace “y” by
- S for straight leads
- K for kinked leads (bulk only)
- L for kinked leads with H0 = 16 mm (tape and reel/ammo)
- M for kinked leads with H0 = 18.25 mm (tape and reel/ammo)

(7) All varistors are UL1449 edition 4 recognized as SPD type 5 (component level) for operating temperatures up to 125 °C. The varistors may be used in other SPD types as 2, 3, or 4 depending on the indicated nominal discharge current ratings. The final acceptance of the component is dependent upon its installation and use in complete equipment submitted to Underwriters Laboratories Inc.

For technical questions, contact: nlr@vishay.com
THIS DOCUMENT IS SUBJECT TO CHANGE WITHOUT NOTICE. THE PRODUCTS DESCRIBED HEREIN AND THIS DOCUMENT ARE SUBJECT TO SPECIFIC DISCLAIMERS, SET FORTH AT www.vishay.com/doc?91000

ELECTRICAL CHARACTERISTICS

ELECTRICAL DATA		
PARAMETER	**VALUE**	**UNIT**
Maximum continuous voltage:		
RMS	115 to 680	V
DC	150 to 895	V
Maximum non-repetitive transient current (I_{NRP}) (8 x 20 µs)		
VDRUS07	1800	A
VDRUS10	4500	A
VDRUS14	8000	A
VDRUS20	13 000	A
Thermal resistance:		
VDRUS07	≈ 70	K/W
VDRUS10	≈ 60	K/W
VDRUS14	≈ 50	K/W
VDRUS20	≈ 40	K/W
Maximum dissipation:		
VDRUS07	250	mW
VDRUS10	400	mW
VDRUS14	600	mW
VDRUS20	1000	mW
Temperature coefficient of voltage at 1 mA maximum	± 0.05	%/K
Voltage proof between interconnected leads and case	1000	V
Storage temperature	-40 to +150	°C
Operating temperature	-40 to +125	°C

DERATING CURVE

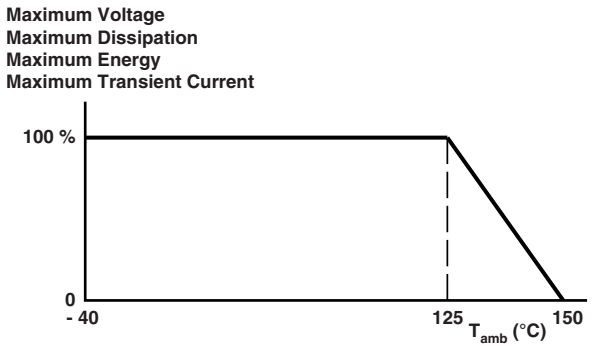

PEAK CURRENT AS A FUNCTION OF PULSE WIDTH

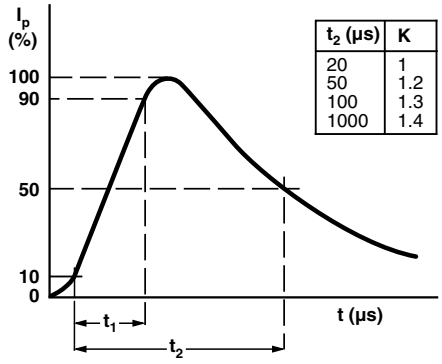

COMPONENT DIMENSIONS (BULK TYPE) in millimeters AND CATALOG NUMBERS												
D MAX.		A MAX.		A_0 MAX.		L MIN.	T (1) MAX.	E (1)	d	F	CATALOG NUMBER	MARKING NUMBER
V ≤ 320 V	V > 320 V	V ≤ 300 V	V > 300 V	V ≤ 320 V	V > 320 V							
9.0		11.0		13.0		24.0	7.0	0.7 to 3.9	0.6 ± 0.05	5 ± 1.0	VDRUS07	572
12.0	12.5	14.5	15.5	16.5	17.0	24.0	10.8	0.9 to 5.4	0.8 ± 0.05	7.5 ± 1.0	VDRUS10	573
16.0	16.5	19.0		21.0	21.5	24.0	9.8	0.9 to 5.4	0.8 ± 0.05	7.5 ± 1.0	VDRUS14	575
22.5	23.0	25.5		27.5	28.0	24.0	10.2	1.1 to 5.8	1.0 ± 0.05	10 ± 1.0	VDRUS20	576

Note

(1) $T_{max.}$ and E values per size and voltage level can be found back in the Electrical Data table

For technical questions, contact: nlr@vishay.com

THIS DOCUMENT IS SUBJECT TO CHANGE WITHOUT NOTICE. THE PRODUCTS DESCRIBED HEREIN AND THIS DOCUMENT ARE SUBJECT TO SPECIFIC DISCLAIMERS, SET FORTH AT www.vishay.com/doc?91000

VARISTORS IN BULK				
TYPE	**VDRUS07 Ø 7 mm 115 V to 510 V**	**VDRUS10 Ø 10 mm 115 V to 680 V**	**VDRUS14 Ø 14 mm 115 V to 680 V**	**VDRUS20 Ø 20 mm 115 V to 680 V**
Straight leads; see outline of components with straight leads drawing	BSE	BSE	BSE	BSE
Kinked leads; see outline of components with kinked leads drawing	BKE	BKE	BKE	BKE
Packaging quantities				
115 V to 300 V	250	200	100	50
320 V to max. V	250	100	100	50

DIMENSIONS in millimeters: see Component Dimensions and Electrical Data table

OUTLINE of Component with Straight Leads

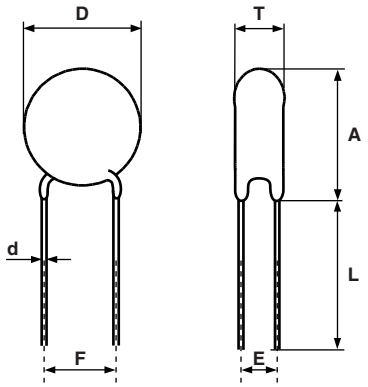

OUTLINE of Component with Kinked Leads

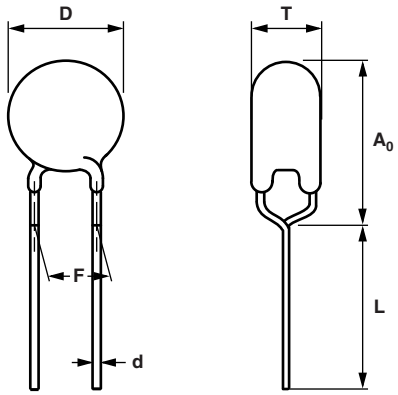

For technical questions, contact: nlr@vishay.com

THIS DOCUMENT IS SUBJECT TO CHANGE WITHOUT NOTICE. THE PRODUCTS DESCRIBED HEREIN AND THIS DOCUMENT ARE SUBJECT TO SPECIFIC DISCLAIMERS, SET FORTH AT www.vishay.com/doc?91000

VARISTORS ON TAPE IN AMMOPACK			
TYPE	**VDRUS07 Ø 7 mm 115 V to 510 V**	**VDRUS10 Ø 10 mm 115 V to 550 V**	**VDRUS14 Ø 14 mm 115 V to 550 V**
Straight leads H = 18 mm H = 20 mm See drawing: taped version with straight leads	 - ASE	 - ASE	 ASE -
Kinked leads H_0 = 18.25 mm H_0 = 16 mm See drawing: taped version with kinked leads	 AME ALE	 AME ALE	 AME ALE
Packaging quantities			
115 V to 210 V	1500	500	500
230 V to 510 V	1000	500	500
550 V	-	400	400

DIMENSIONS OF AMMOPACK in millimeters

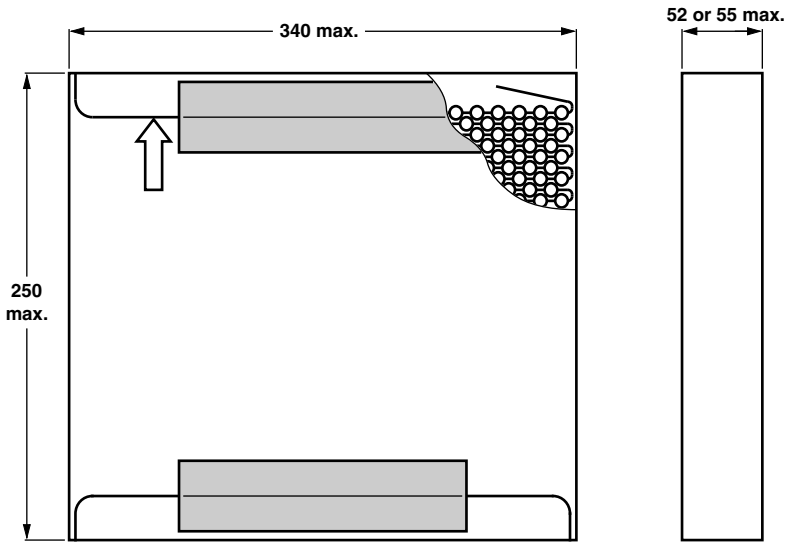

For technical questions, contact: nlr@vishay.com

THIS DOCUMENT IS SUBJECT TO CHANGE WITHOUT NOTICE. THE PRODUCTS DESCRIBED HEREIN AND THIS DOCUMENT ARE SUBJECT TO SPECIFIC DISCLAIMERS, SET FORTH AT www.vishay.com/doc?91000

VARISTORS ON TAPE AND REEL			
TYPE	**VDRUS07 Ø 7 mm 115 V to 510 V**	**VDRUS10 Ø 10 mm 115 V to 550 V**	**VDRUS14 Ø 14 mm 115 V to 550 V**
Straight leads H = 18 mm H = 20 mm See drawing: taped version with straight leads	 - TSE	 - TSE	 TSE -
Kinked leads H_0 = 18.25 mm H_0 = 16 mm See drawing: taped version with kinked leads	 TME TLE	 TME TLE	 TME TLE
Packaging quantities			
115 V to 250 V	1500	1000	750
275 V to 300 V	1500	500	750
320 V to max. V	1000	500	500

PACKAGING

TAPED VERSION WITH STRAIGHT LEADS (only for VDRUS07)

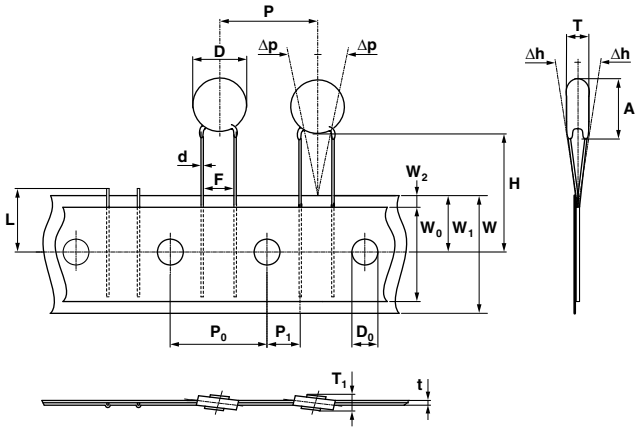

TAPED VERSION WITH STRAIGHT LEADS (only for VDRUS10 and VDRUS14)

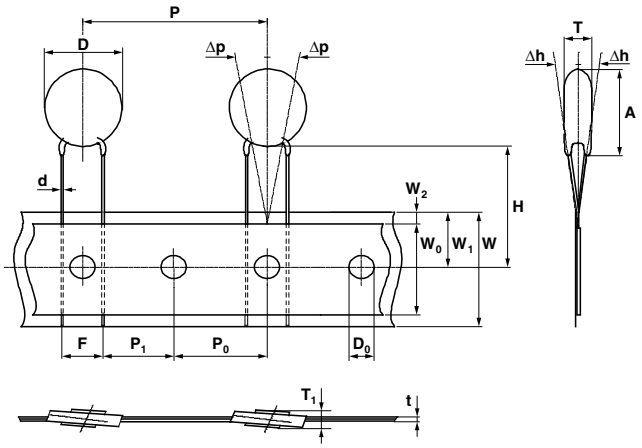

For technical questions, contact: nlr@vishay.com

THIS DOCUMENT IS SUBJECT TO CHANGE WITHOUT NOTICE. THE PRODUCTS DESCRIBED HEREIN AND THIS DOCUMENT ARE SUBJECT TO SPECIFIC DISCLAIMERS, SET FORTH AT www.vishay.com/doc?91000

TAPED VERSION WITH KINKED LEADS
(only for VDRUS07)

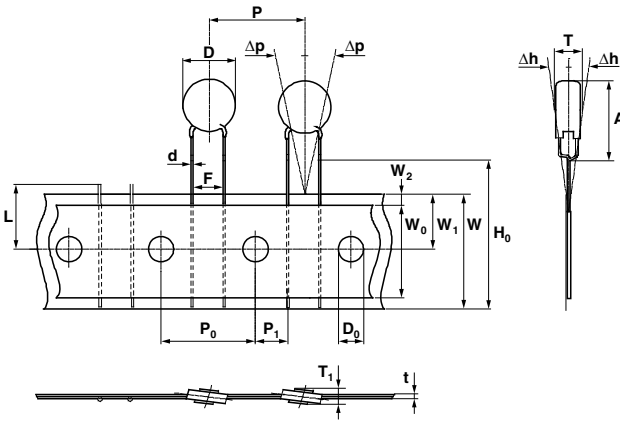

TAPED VERSION WITH KINKED LEADS
(only for VDRUS10 and VDRUS14)

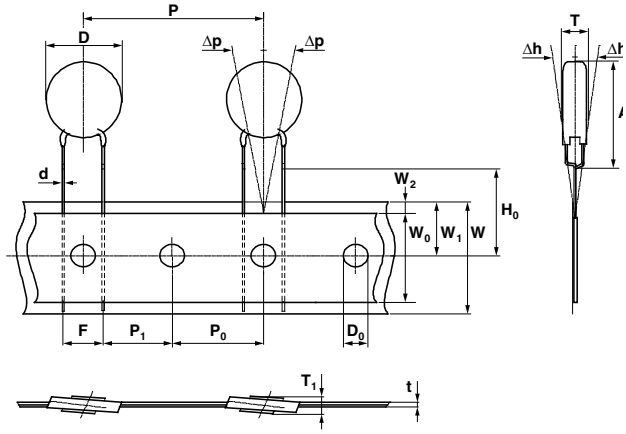

TAPING DATA (based on IEC 60286-2)					
SYMBOL	**PARAMETER**		**DIMENSIONS/TOLERANCE**		
			VDRUS07	**VDRUS10**	**VDRUS14**
A max.	Max. mounting height	V ≤ 300 V	11.0	14.5	19.0
		V > 300 V		15.5	
A_0 max.	Max. mounting height	V ≤ 320 V	13.0	16.5	21.0
		V > 320 V		17.0	21.5
D max.	Max. body diameter	V ≤ 320 V	9.0	12.0	16.0
		V > 320 V		12.5	16.5
d	Lead wire diameter		0.6 ± 0.05	0.8 ± 0.05	
F	Lead to lead distance (1)		5.0 + 0.8/- 0.2	7.5 ± 0.8	
H	Distance component to tape center (2)		20.0 + 2.0/- 0.0	18.0 + 2.0/- 0.0	
H_0	Lead wire clinch height		16.0 or 18.25 ± 0.5		
P	Pitch of components on tape		12.7 ± 1.0	25.4 ± 1.0	
T	Total thickness		See Electrical Data table		

Notes

(1) Guaranteed between component and tape

(2) For VDRUS14X510xSE and VDRUS14X550xSE: H = 20 mm ± 1 mm

For technical questions, contact: nlr@vishay.com

THIS DOCUMENT IS SUBJECT TO CHANGE WITHOUT NOTICE. THE PRODUCTS DESCRIBED HEREIN AND THIS DOCUMENT ARE SUBJECT TO SPECIFIC DISCLAIMERS, SET FORTH AT www.vishay.com/doc?91000

V/I CHARACTERISTICS

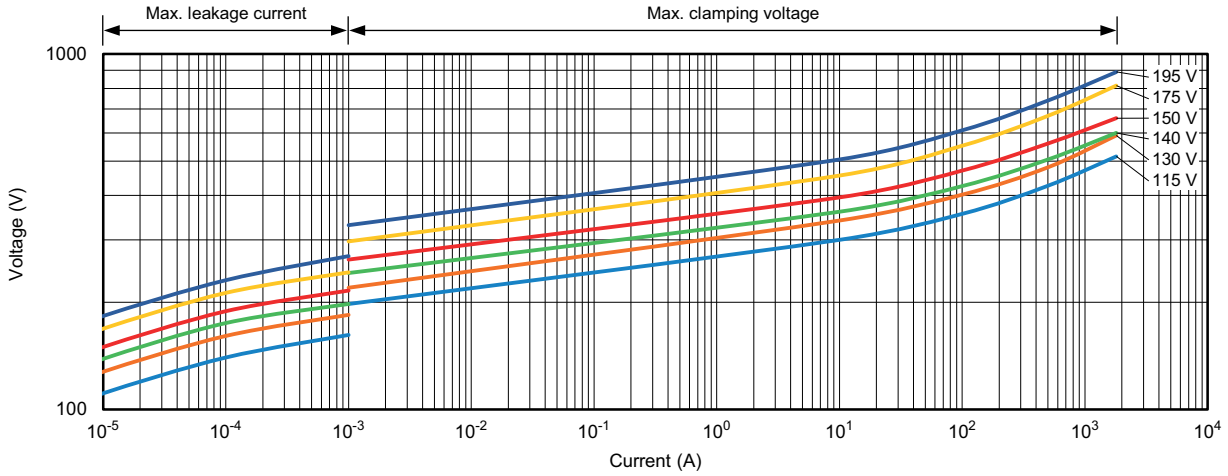

115 V_{RMS} to 195 V_{RMS}; VDRUS07

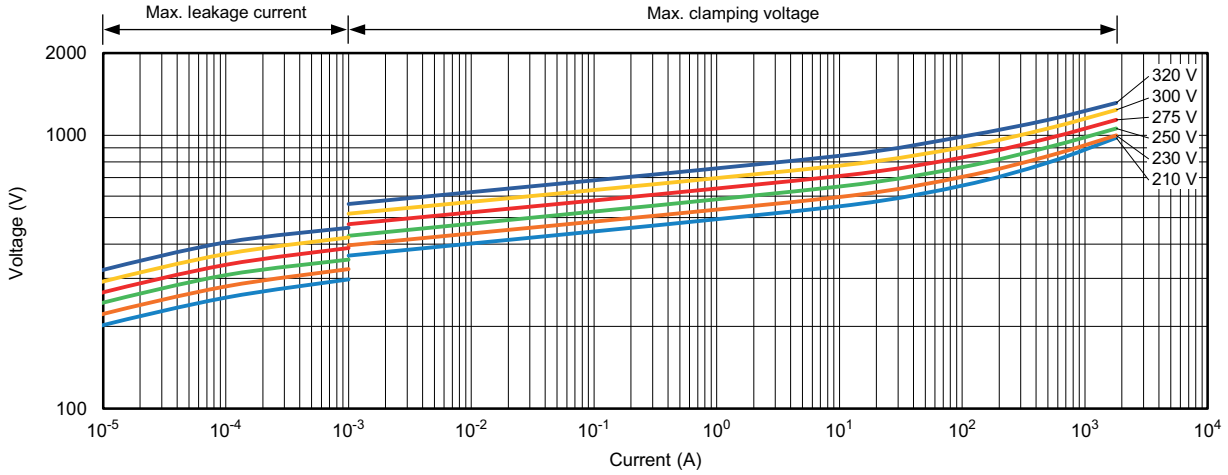

210 V_{RMS} to 300 V_{RMS}; VDRUS07

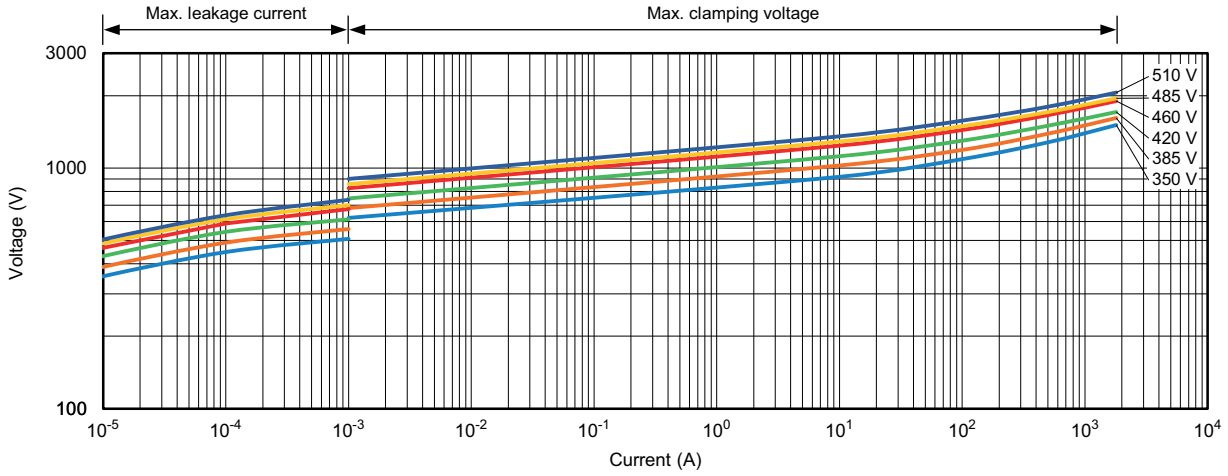

350 V_{RMS} to 510 V_{RMS}; VDRUS07

For technical questions, contact: nlr@vishay.com

THIS DOCUMENT IS SUBJECT TO CHANGE WITHOUT NOTICE. THE PRODUCTS DESCRIBED HEREIN AND THIS DOCUMENT ARE SUBJECT TO SPECIFIC DISCLAIMERS, SET FORTH AT www.vishay.com/doc?91000

V/I CHARACTERISTICS

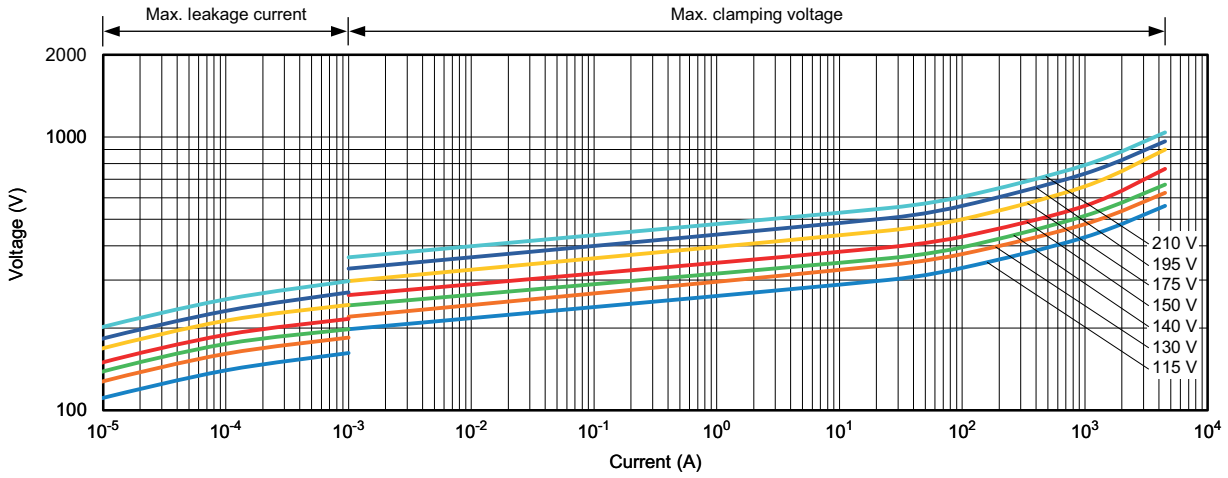

115 V_{RMS} to 210 V_{RMS}; VDRUS10

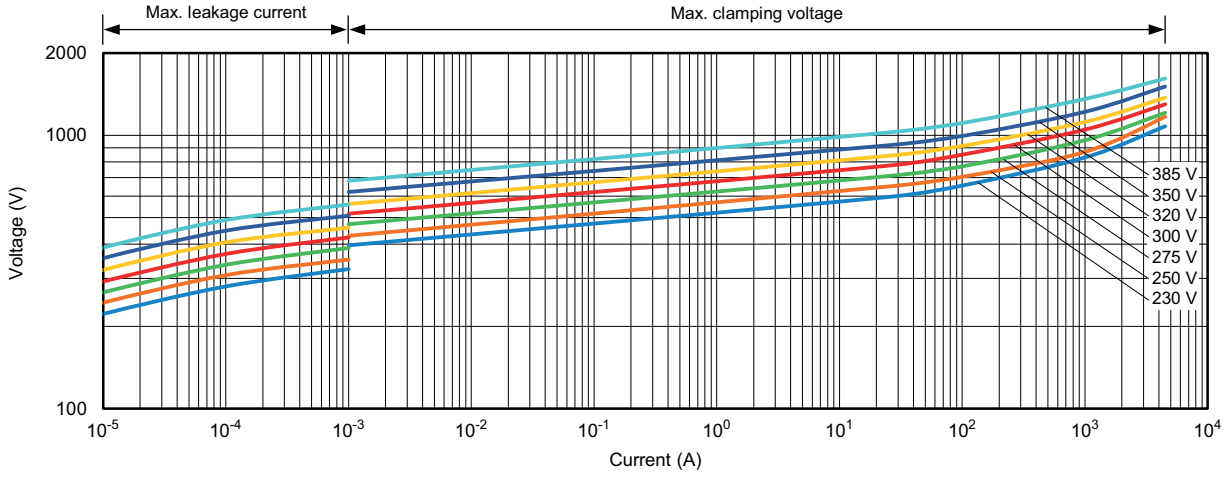

230 V_{RMS} to 385 V_{RMS}; VDRUS10

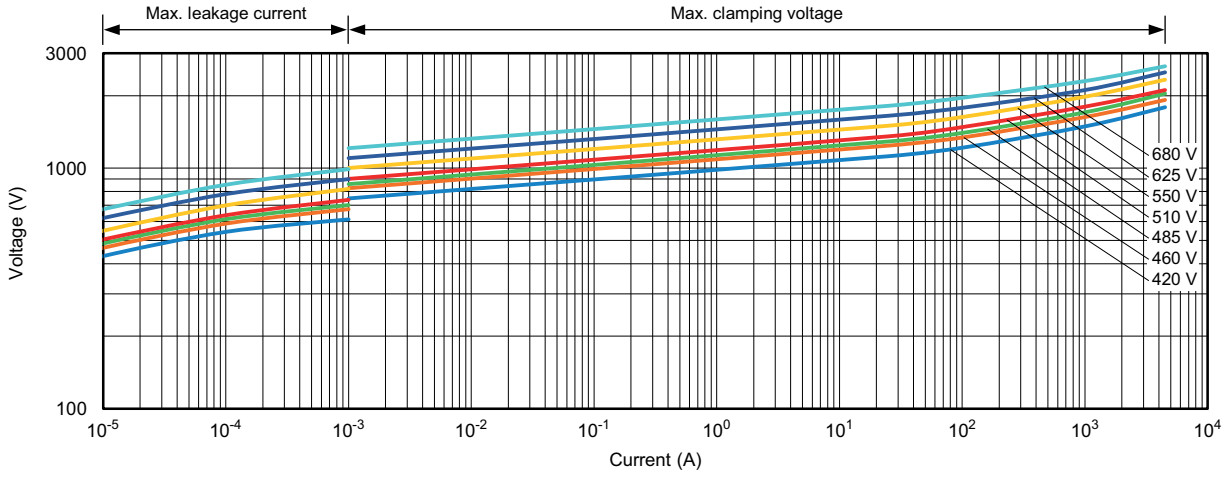

420 V_{RMS} to 680 V_{RMS}; VDRUS10

For technical questions, contact: nlr@vishay.com

THIS DOCUMENT IS SUBJECT TO CHANGE WITHOUT NOTICE. THE PRODUCTS DESCRIBED HEREIN AND THIS DOCUMENT ARE SUBJECT TO SPECIFIC DISCLAIMERS, SET FORTH AT www.vishay.com/doc?91000

V/I CHARACTERISTICS

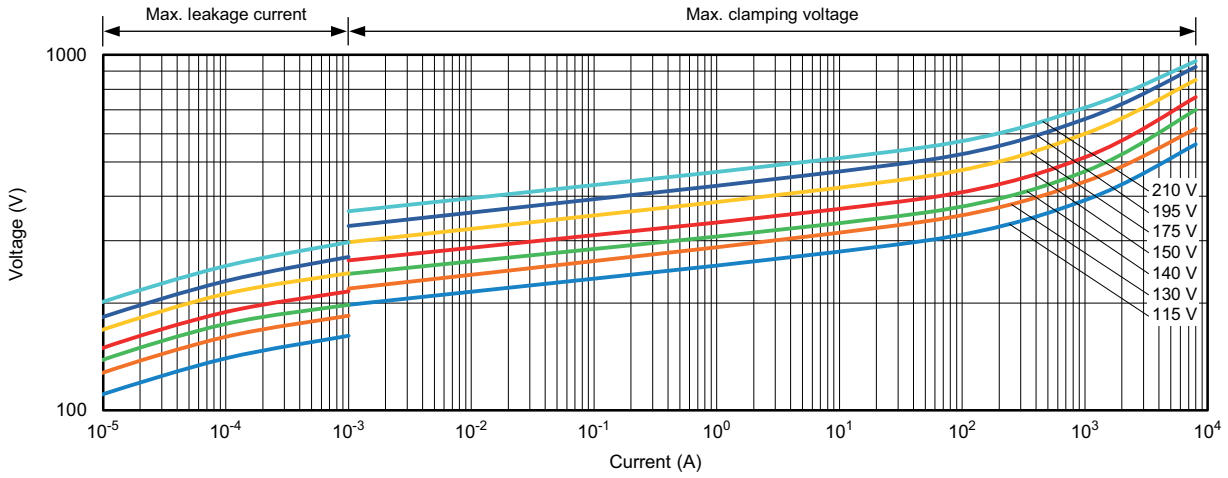

115 V_{RMS} to 210 V_{RMS}; VDRUS14

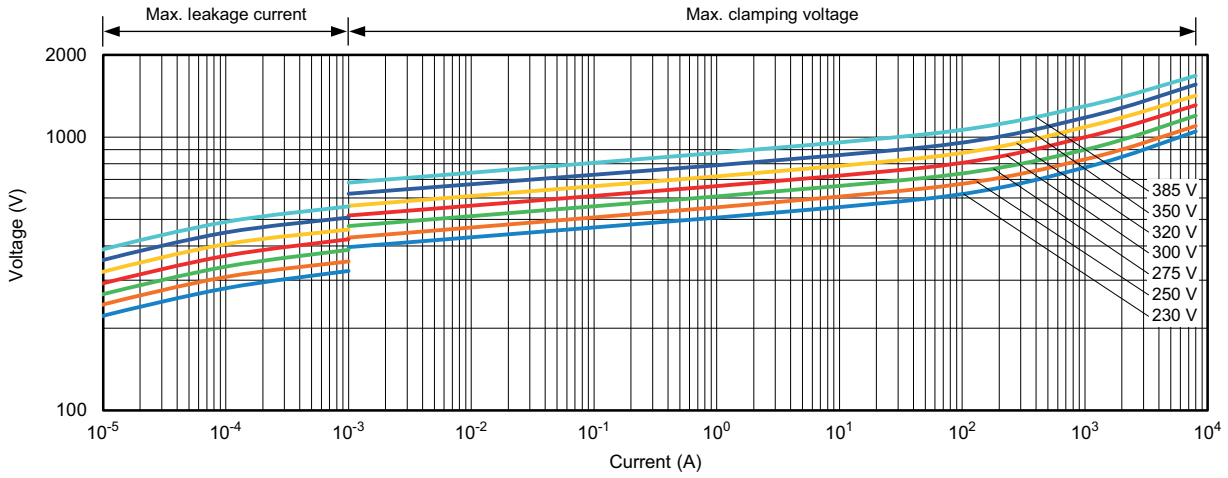

230 V_{RMS} to 385 V_{RMS}; VDRUS14

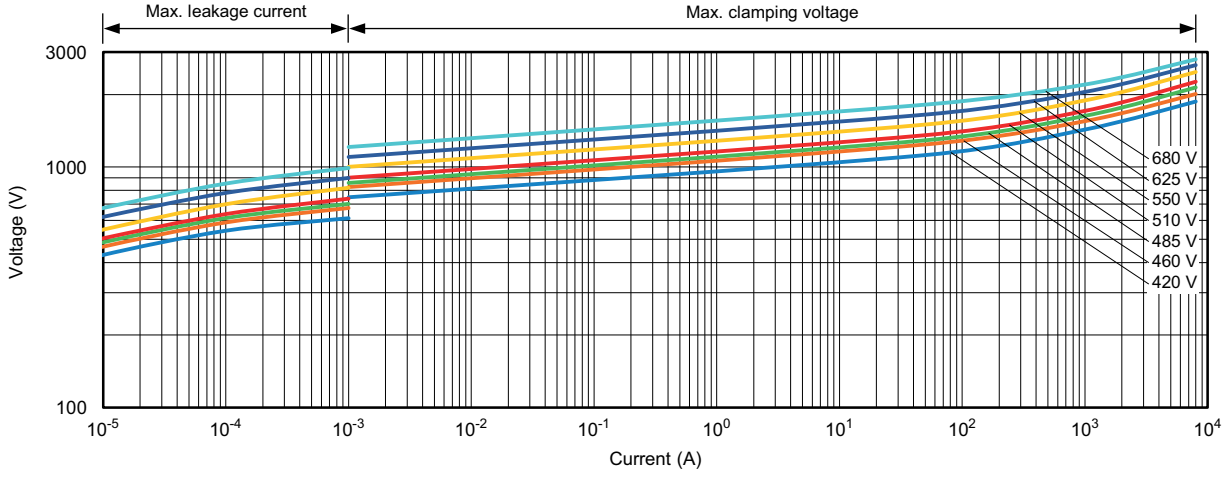

420 V_{RMS} to 680 V_{RMS}; VDRUS14

For technical questions, contact: nlr@vishay.com
THIS DOCUMENT IS SUBJECT TO CHANGE WITHOUT NOTICE. THE PRODUCTS DESCRIBED HEREIN AND THIS DOCUMENT ARE SUBJECT TO SPECIFIC DISCLAIMERS, SET FORTH AT www.vishay.com/doc?91000

V/I CHARACTERISTICS

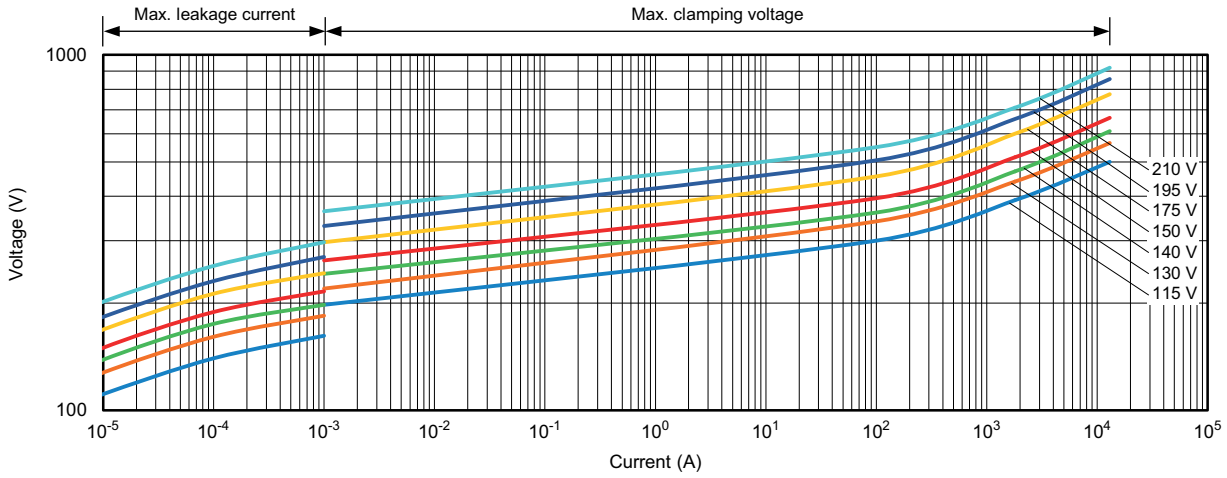

115 V_{RMS} to 210 V_{RMS}; VDRUS20

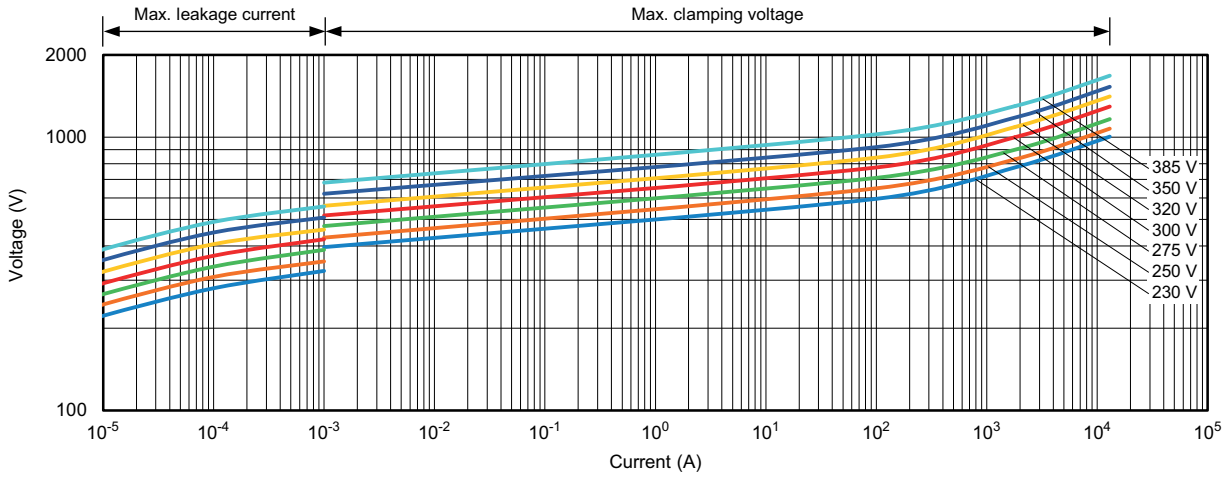

230 V_{RMS} to 385 V_{RMS}; VDRUS20

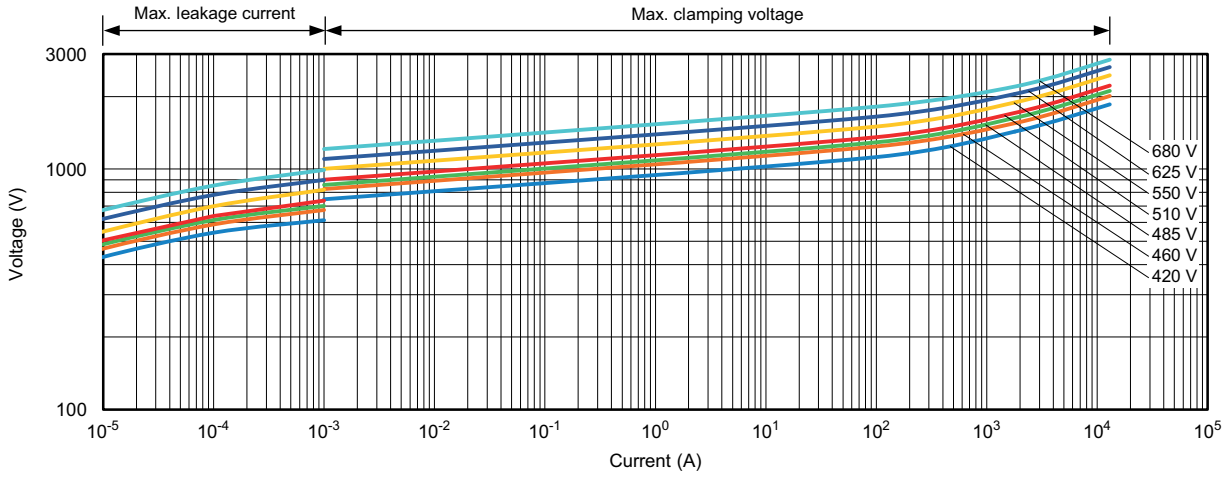

420 V_{RMS} to 680 V_{RMS}; VDRUS20

For technical questions, contact: nlr@vishay.com
THIS DOCUMENT IS SUBJECT TO CHANGE WITHOUT NOTICE. THE PRODUCTS DESCRIBED HEREIN AND THIS DOCUMENT ARE SUBJECT TO SPECIFIC DISCLAIMERS, SET FORTH AT www.vishay.com/doc?91000

PULSE DERATING

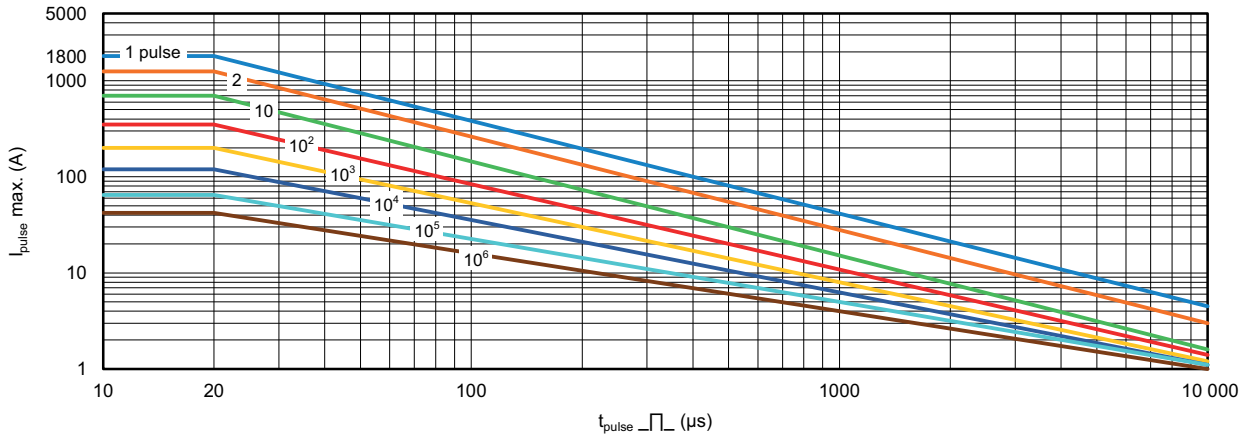

115 V_{RMS} to 510 V_{RMS}; VDRUS07

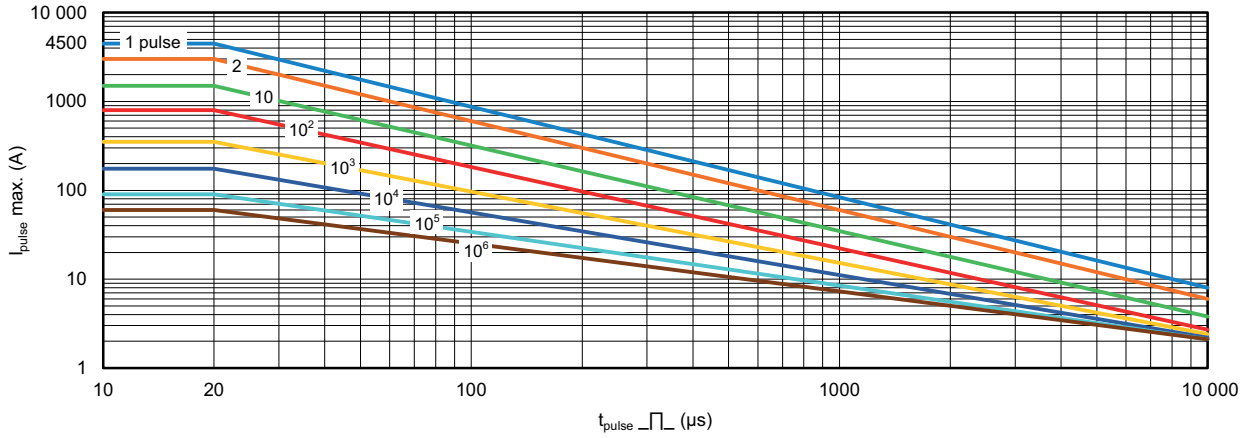

115 V_{RMS} to 680 V_{RMS}; VDRUS10

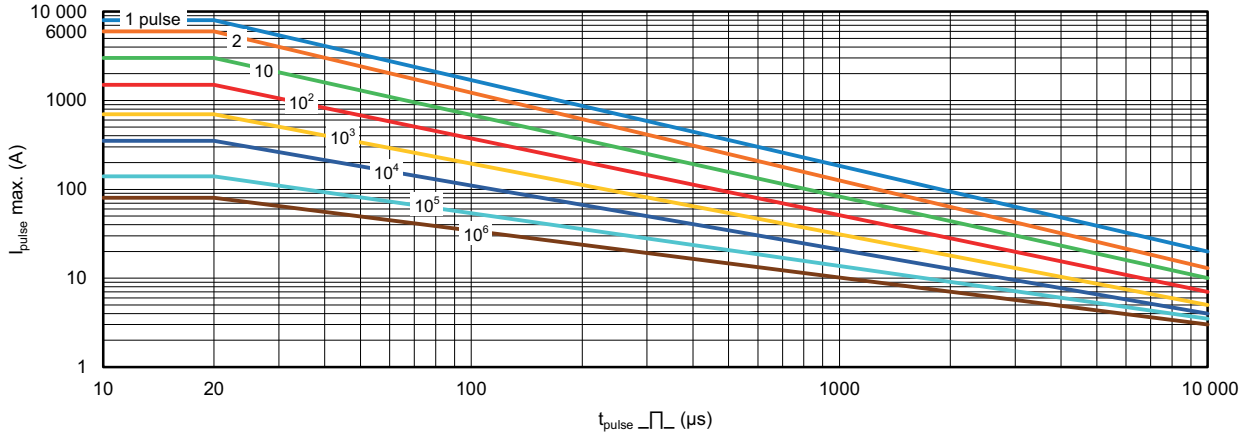

115 V_{RMS} to 680 V_{RMS}; VDRUS14

For technical questions, contact: nlr@vishay.com
THIS DOCUMENT IS SUBJECT TO CHANGE WITHOUT NOTICE. THE PRODUCTS DESCRIBED HEREIN AND THIS DOCUMENT ARE SUBJECT TO SPECIFIC DISCLAIMERS, SET FORTH AT www.vishay.com/doc?91000

PULSE DERATING

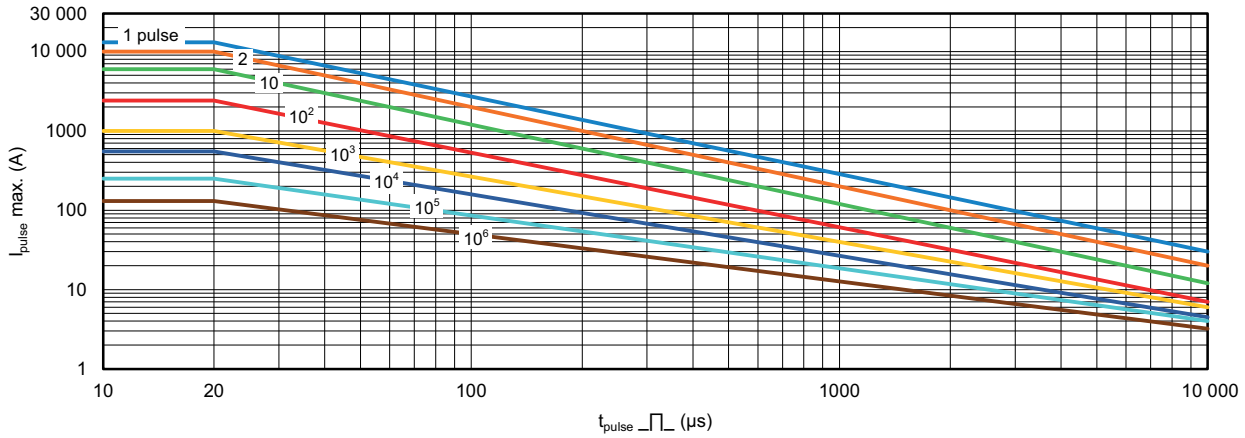

115 V_{RMS} to 680 V_{RMS}; VDRUS20

For technical questions, contact: nlr@vishay.com

THIS DOCUMENT IS SUBJECT TO CHANGE WITHOUT NOTICE. THE PRODUCTS DESCRIBED HEREIN AND THIS DOCUMENT ARE SUBJECT TO SPECIFIC DISCLAIMERS, SET FORTH AT www.vishay.com/doc?91000

Disclaimer

ALL PRODUCT, PRODUCT SPECIFICATIONS AND DATA ARE SUBJECT TO CHANGE WITHOUT NOTICE TO IMPROVE RELIABILITY, FUNCTION OR DESIGN OR OTHERWISE.

Vishay Intertechnology, Inc., its affiliates, agents, and employees, and all persons acting on its or their behalf (collectively, “Vishay”), disclaim any and all liability for any errors, inaccuracies or incompleteness contained in any datasheet or in any other disclosure relating to any product.

Vishay makes no warranty, representation or guarantee regarding the suitability of the products for any particular purpose or the continuing production of any product. To the maximum extent permitted by applicable law, Vishay disclaims (i) any and all liability arising out of the application or use of any product, (ii) any and all liability, including without limitation special, consequential or incidental damages, and (iii) any and all implied warranties, including warranties of fitness for particular purpose, non-infringement and merchantability.

Statements regarding the suitability of products for certain types of applications are based on Vishay's knowledge of typical requirements that are often placed on Vishay products in generic applications. Such statements are not binding statements about the suitability of products for a particular application. It is the customer's responsibility to validate that a particular product with the properties described in the product specification is suitable for use in a particular application. Parameters provided in datasheets and / or specifications may vary in different applications and performance may vary over time. All operating parameters, including typical parameters, must be validated for each customer application by the customer's technical experts. Product specifications do not expand or otherwise modify Vishay's terms and conditions of purchase, including but not limited to the warranty expressed therein.

Hyperlinks included in this datasheet may direct users to third-party websites. These links are provided as a convenience and for informational purposes only. Inclusion of these hyperlinks does not constitute an endorsement or an approval by Vishay of any of the products, services or opinions of the corporation, organization or individual associated with the third-party website. Vishay disclaims any and all liability and bears no responsibility for the accuracy, legality or content of the third-party website or for that of subsequent links.

Vishay products are not designed for use in life-saving or life-sustaining applications or any application in which the failure of the Vishay product could result in personal injury or death unless specifically qualified in writing by Vishay. Customers using or selling Vishay products not expressly indicated for use in such applications do so at their own risk. Please contact authorized Vishay personnel to obtain written terms and conditions regarding products designed for such applications.

No license, express or implied, by estoppel or otherwise, to any intellectual property rights is granted by this document or by any conduct of Vishay. Product names and markings noted herein may be trademarks of their respective owners.

© 2026 VISHAY INTERTECHNOLOGY, INC. ALL RIGHTS RESERVED

THIS DOCUMENT IS SUBJECT TO CHANGE WITHOUT NOTICE. THE PRODUCTS DESCRIBED HEREIN AND THIS DOCUMENT ARE SUBJECT TO SPECIFIC DISCLAIMERS, SET FORTH AT www.vishay.com/doc?91000