Product datasheet

Specifications



cam changeover switch - 4-pole - 60° - 63 A - screw mounting

K63H014UP

Discontinued on: 9 Feb 2023

EAN Code: 3389110084467

Discontinued

Main

Range of product	Harmony K
Product or component type	Complete cam switch
Component name	K63
[Ith] conventional free air thermal current	63 A
Mounting location	Front
Fixing mode	4 holes
Cam switch head type	With front plate 64 x 64 mm
Type of operator	Black handle
Rotary handle padlocking	Without
Presentation of legend	With metallic legend, 1 - 2 black marking
Cam switch function	Changeover switch
Return	Without
Off position	Without Off position
Poles description	4P
Switching positions	Left: 330° Right: 30°
IP degree of protection	IP40 conforming to IEC 60529

Complementary

Switching angle	30 °
[Ui] rated insulation voltage	690 V (pollution degree 3) conforming to IEC 60947-1
Short-circuit current	10000 A
Short-circuit protection	80 A cartridge fuse, type gG
[Uimp] rated impulse withstand voltage	6 kV conforming to EN 947-1 6 kV conforming to IEC 947-1
Contact operation	Slow-break
Positive opening	With
Electrical connection	Captive screw clamp terminals flexible, clamping capacity: 2 x 10 mm² Captive screw clamp terminals solid, clamping capacity: 2 x 16 mm²
Tightening torque	2.5 N.m

Disclaimer: This documentation is not intended as a substitute for and is not to be used for determining suitability or reliability of these products for specific user applications

Switching capacity in mA	20000 mA DC at 140 V 3 contact(s) for inductive load (T = 50 ms) 20000 mA DC at 48 V 1 contact(s) for inductive load (T = 50 ms) 20000 mA DC at 95 V 2 contact(s) for inductive load (T = 50 ms) 30000 mA DC at 120 V 2 contact(s) for resistive load (T = 1 ms) 30000 mA DC at 180 V 3 contact(s) for resistive load (T = 1 ms) 30000 mA DC at 60 V 1 contact(s) for resistive load (T = 1 ms) 55000 mA DC at 30 V 1 contact(s) for inductive load (T = 50 ms) 55000 mA DC at 60 V 2 contact(s) for inductive load (T = 50 ms) 55000 mA DC at 90 V 3 contact(s) for inductive load (T = 50 ms) 63000 mA DC at 140 V 3 contact(s) for resistive load (T = 1 ms) 63000 mA DC at 24 V 1 contact(s) for inductive load (T = 50 ms) 63000 mA DC at 24 V 1 contact(s) for resistive load (T = 1 ms) 63000 mA DC at 48 V 1 contact(s) for resistive load (T = 1 ms) 63000 mA DC at 48 V 2 contact(s) for inductive load (T = 50 ms) 63000 mA DC at 48 V 2 contact(s) for resistive load (T = 1 ms) 63000 mA DC at 70 V 3 contact(s) for inductive load (T = 50 ms) 63000 mA DC at 70 V 3 contact(s) for resistive load (T = 1 ms) 63000 mA DC at 95 V 2 contact(s) for resistive load (T = 1 ms)
Mechanical durability	300000 cycles
CAD overall width	64 mm
CAD overall height	64 mm
CAD overall depth	154 mm
Net weight	0.68 kg

Environment

Standards	IEC 60947-3
Product certifications	CULus 120 V 3 hp 1 phase CULus 480 V 25 hp 3 phases CULus 240 V 7.5 hp 1 phase CULus 240 V 10 hp 3 phases
Protective treatment	TC
Ambient air temperature for operation	-25…55 °C
Ambient air temperature for storage	-40…70 °C
Overvoltage category	Class II conforming to IEC 60536 Class II conforming to NF C 20-030

Packing Units

Unit Type of Package 1	PCE
Number of Units in Package 1	1
Package 1 Height	7.500 cm
Package 1 Width	7.500 cm
Package 1 Length	16.000 cm
Package 1 Weight	607.000 g
Unit Type of Package 2	S03
Number of Units in Package 2	20
Package 2 Height	30.000 cm
Package 2 Width	30.000 cm
Package 2 Length	40.000 cm
Package 2 Weight	12.682 kg

Contractual warranty

Warranty	18 months

Environmental Data

Schneider Electric aims to achieve Net Zero status by 2050 through supply chain partnerships, lower impact materials, and circularity via our ongoing “Use Better, Use Longer, Use Again” campaign to extend product lifetimes and recyclability.

Environmental Data explained >

How we assess product sustainability >

Use Better

Materials and Substances

Packaging made with recycled cardboard	**Yes**
Packaging without single use plastic	**Yes**
EU RoHS Directive	**Pro-active compliance (Product out of EU RoHS legal scope)**
REACh Regulation	**REACh Declaration**

Use Again

Repack and remanufacture

Take-back	**No**
WEEE	**The product must be disposed on European Union markets following specific waste collection and never end up in rubbish bins**

Dimensions Drawings

Dimensions

Front Mounting

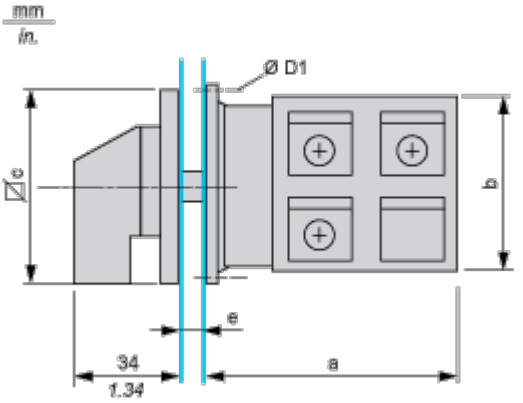

e support panel thickness 0.5 to 5.5 mm / 0.02 to 0.22 in in.

a		b		c		D1	
mm	in.	mm	in.	mm	in.	mm	in.
114.3	4.50	66	2.60	64	2.52	5.4	0.21

Mounting and Clearance

Panel Cut-Out

Front Mounting

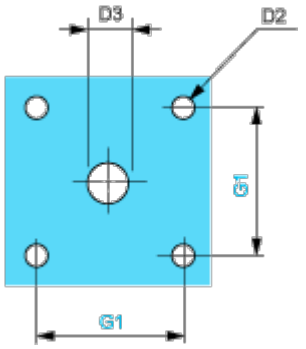

D2		D3		G1	
mm	in.	mm	in.	mm	in.
4.5	0.18	10	0.39	48	1.89

Technical Description

Link Positions (Factory Mounted)

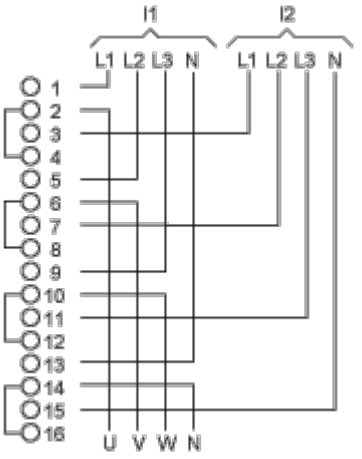

I1 Input 1

I2 Input 2

Marking

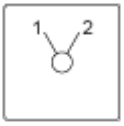

Angular Position of Switch

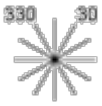

Switching Program



Convention Used for Switching Program Representation

Contact closed

Contact closed in 2 positions and maintained between the 2 positions

Sealed assembly for auto-maintain control

Overlapping contacts

Spring return position: for a switching angle of 90°, spring return is over 30° after the last position (for a maximum of 3 simultaneous contacts).

Example:

