MICRO SWITCH
a Honeywell Division
FED.MFG.CODE 91929

SWITCH – BASIC

CATALOG LISTING
V7–1B17D8–207

CW–B4735

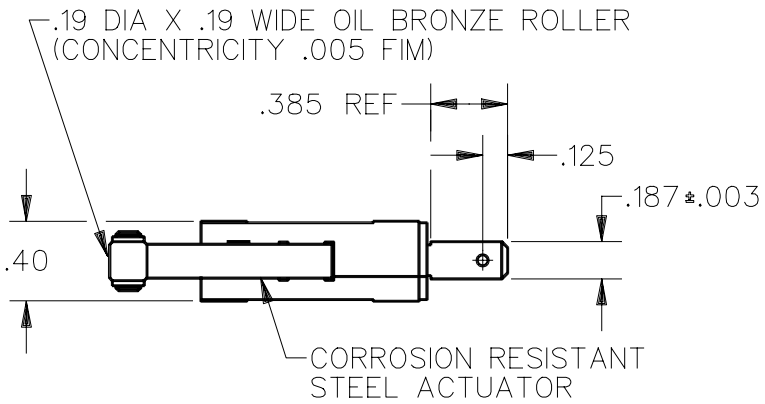

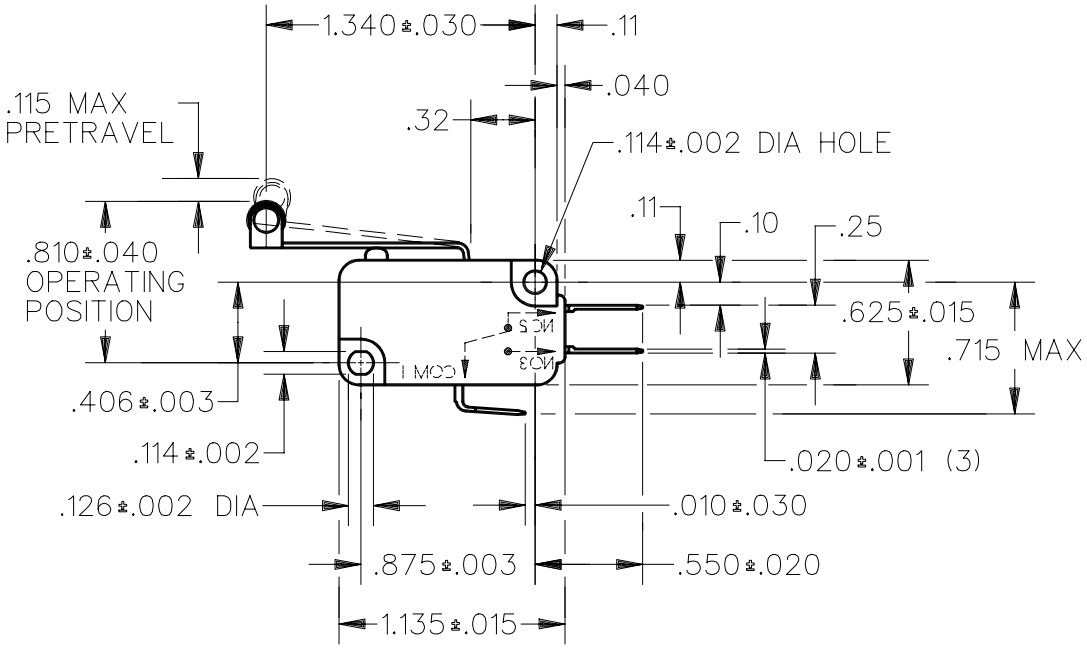

THIS DRAWING COVERS A PROPRIETARY ITEM AND IS THE PROPERTY OF MICRO SWITCH, A DIVISION OF HONEYWELL. THIS DRAWING IS NOT TO BE COPIED OR USED WITHOUT THE APPROVAL OF MICRO SWITCH.

THIRD ANGLE PROJECTION

CHARACTERISTICS	ELECTRICAL DATA	SCALE FULL — DO NOT SCALE PRINT
OPERATING FORCE — — — 85 GRAMS MAX	CONTACT ARRANGEMENT S P D T	**UNLESS OTHERWISE SPECIFIED TOLERANCES ARE**
RELEASE FORCE — — — — 9 GRAMS MIN	L156 11A 1/3HP 125, 250 OR 277 VAC 1/2A 125 VDC, 1/4A 250 VDC 4A 125 VAC "L"	ONE PLACE (.0) ±.030
DIFFERENTIAL TRAVEL — — — .030 MAX		TWO PLACE (.00) ±.015
OVERTRAVEL — — — — — — .060 MIN		THREE PLACE (.000) ±.005
RELEASE TRAVEL — — — — — .016 MIN		ANGLES ±
		WEIGHT

CATALOG LISTING V7–1B17D8–207
ISSUE 2 M
REPLACES
RELEASE NO. PR–18911
CHECK

REVISIONS
A CO–76198 J A L 15 NOV 93

CHECK
J A P 15 JAN 91
CHECK
B A B 11 JAN 91
DRAWN
DDM/CAD