REVISIONS		
ISS	ZONE	DESCRIPTION\PER REQUEST\DATE

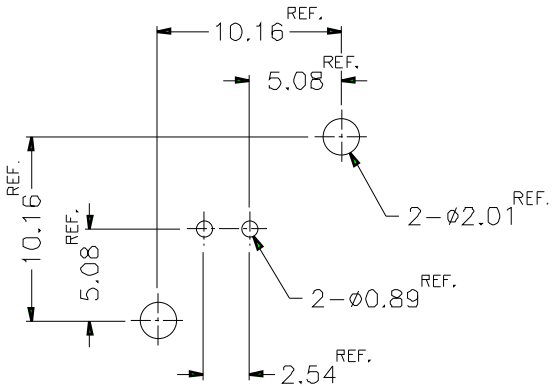

PCB MOUNTING HOLE

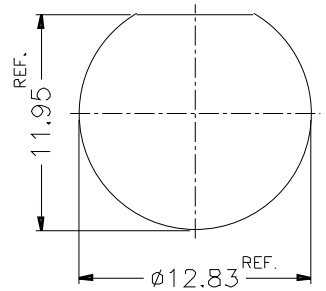

RECOMMENDED MOUNTING HOLE

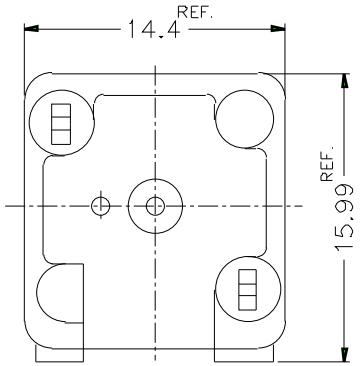

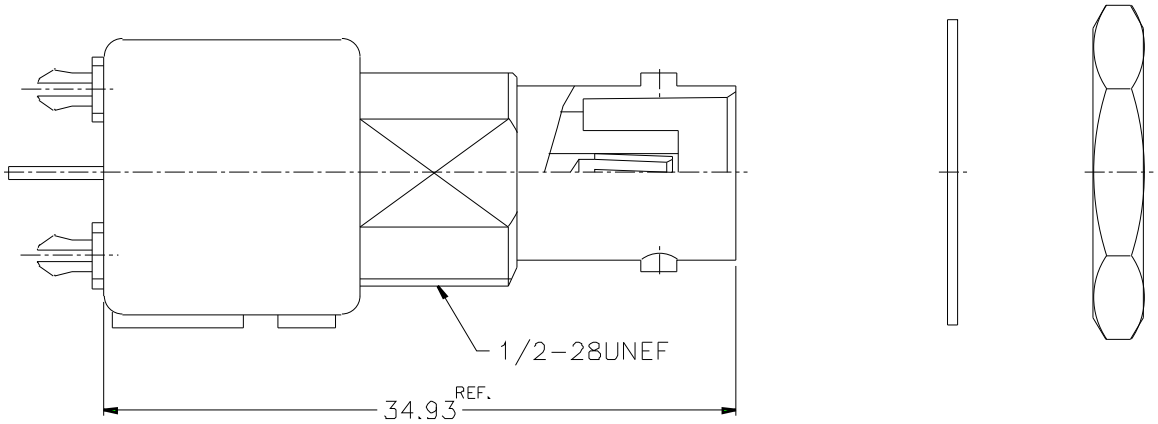

NOTES: FINISH (PLATING THICKNESS IN MICRO-INCHES)
1. BRASS PER QQ-B-626
2. BRASS PER QQ-B-613
3. NICKEL PL. 100 MIN. THICK OVER ZINC ALLOY
4. TIN PLATING
5. PHOSPHOR BRONZE PER QQ-B-750
6. GOLD FLASH OVER NICKEL PL. 50 MIN. THICK AT MATING AREA.
TIN-LEAD PL. 100 MIN. THICK OVER NICKEL PL. 50 MIN. THICK AT TAIL.
7. ZINC DIECAST
8. POLYPROPYLENE UL 94HB

1. MAX. PANEL THICKNESS=5mm

NO.	DESCRIPTION	MATERIAL	FINISH	Q'TY	DRAWING NO
7	HEX NUT	NOTE 1	NOTE 3		
6	LOCK WASHER	NOTE 2	NOTE 3		
5	MOUNTING POST	NOTE 2	NOTE 4		
4	POST	COPPER	NOTE 4		
3	CONTACT PIN	NOTE 5	NOTE 6		
2	INSULATOR	NOTE 8	NATURAL		
1	BODY	NOTE 7	NOTE 3		

DIMENSIONS ARE IN MILLIMETERS

UNLESS OTHERWISE SPECIFIED TOLERANCES
0.5-6 = ±0.2
6-30 = ±0.4
30-120 = ±0.6
120-315 = ±1
315-1000 = ±1.6
1000-2000 = ±2.4

SCALE 2.5/1 | ISSUE A

PART NO. B6251G3-NPP3G-50

APPROVED | DATE 10-11-01'

CHECKED | DATE 10-11-01'

DRAWN | DATE 10-11-01'

FILE NO

Amphenol

TITLE
BNC STRAIGHT PC MOUNT RECEPT. JACK

DRAWING NO.
KJ-B6251G3-NPP3G-50

ITEM NO.