THIS DRAWING IS UNPUBLISHED. RELEASED FOR PUBLICATION -,N/A .
© COPYRIGHT N/A BY TYCO ELECTRONICS CORPORATION. ALL INTERNATIONAL RIGHTS RESERVED.

LOC	DIST
DF	DO

REVISIONS

P	LTR	DESCRIPTION	DATE	DWN	APVD
	N	REV PER ECO-08-018752	21-08-08	PK	BW
	P	REV PER ECO-09-013174	30-03-09	CT	RL

1. THIS PLUG WILL MATE WITH ANY 21C4, SIZE 4 RECEPTACLE IN AMPLIMITE SERIES.
2. MAXIMUM WIRE INSULATION TO BE USED WITH THIS PLUG IS ø.072.
3. RETENTION CLIPS (17) ARE INCLUDED IN INSERT ASSEMBLY.
4. THIS CONNECTOR ACCEPTS SIZE 20 PIN CONTACTS, NOT PROVIDED, IN CAVITIES 1 THRU 17.
5. CAVITIES A1 THRU A4 ACCEPTS SIZE 8 POWER OR COAX PIN CONTACTS, NOT PROVIDED. RIGHT ANGLE COAX CONTACTS WILL NOT SEAT IN THIS CONNECTOR.

6. UL/CSA DESIGNATION STAMPED IN THIS AREA, OPTIONAL.
7. MATERIAL: STEEL PER ASTM-A-109.
8. FINISH: CADMIUM PLATED PER QQ-P-416, TYPE II, CLASS 2.
9. MATERIAL: BRASS PER ASTM-B-36.
10. FINISH: GOLD PER MIL-G-45204, TYPE II, GRADE C, CLASS 1 OVER COPPER PER MIL-C-14550, CLASS IV.
11. FINISH: TIN PER ASTM-B-545 .000200 MIN THK OVER COPPER PER AMS2418 .000100-.000200 THK.
12. GROUNDING INDENTS FOR 212530-4, 212530-5, & 5-212530-4 ONLY.
13. 212530-6 IS OBSOLETE.
14. FINISH: BRIGHT TIN PER ASTM-B-545 .000400-.000550 THK OVER COPPER PER AMS2418 .000050 MIN THK.
15. FINISH: TIN PER ASTM-B-545 .000200 MIN THK OVER COPPER PER AMS2418 .000100-.000200 THK.
16. FINISH: ZINC PLATE PER ASTM-B-633 .000200-.000400 THK WITH SUPPLEMENTARY CHROMATE (Cr3+).

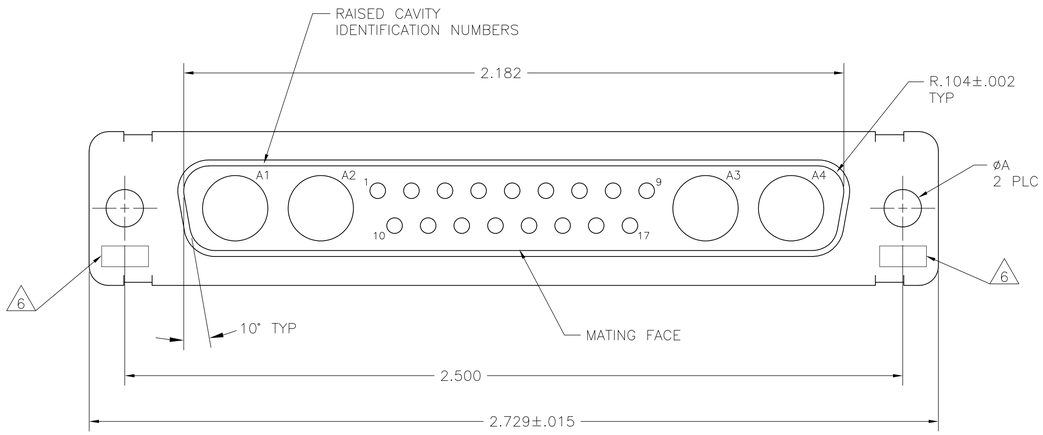

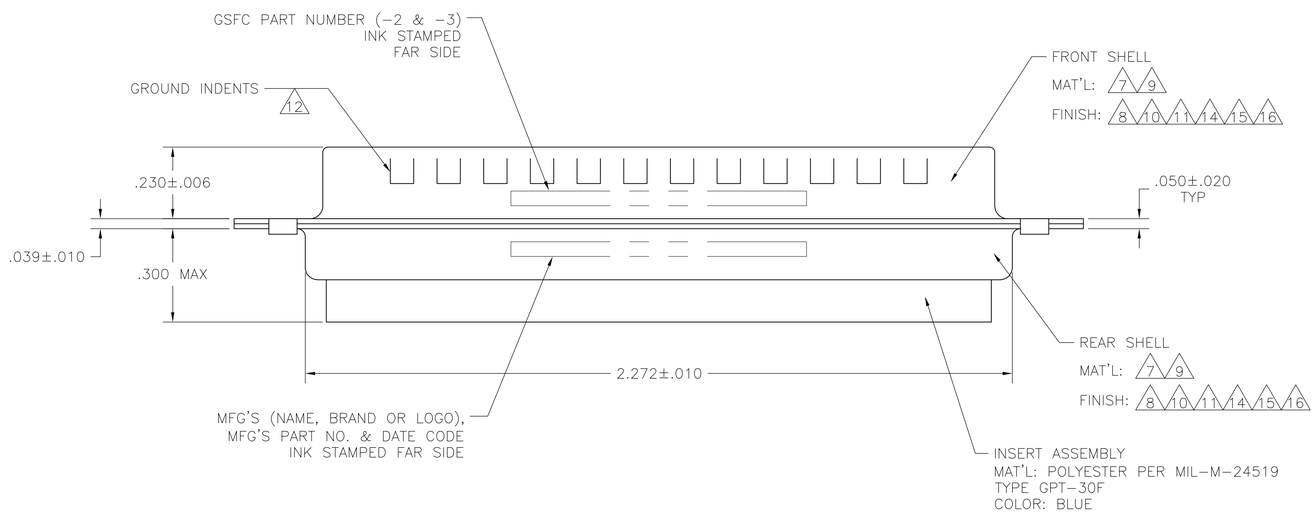

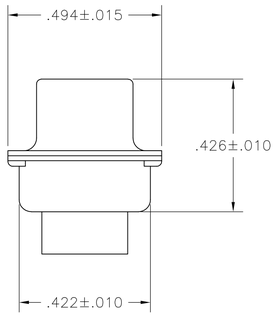

REMARKS	ØA	GSFC P/N	PART NO.
7 12 15	.120	–	5-212530-4
7 16	.120	–	5-212530-1
7 14	.120	–	212530-6
7 12 14	.120	–	212530-5
7 11 12	.120	–	212530-4
9 10	.154	311P405-18P-B-15	212530-3
9 10	.120	311P405-18P-B-12	212530-2
7 8	.120	–	212530-1

THIS DRAWING IS A CONTROLLED DOCUMENT.

DIMENSIONS: INCHES

TOLERANCES UNLESS OTHERWISE SPECIFIED:
0 PLC ± –
1 PLC ± –
2 PLC ± –
3 PLC ± .005[0.13]
4 PLC ± –
ANGLES ± 0°30'

MATERIAL –
FINISH –

DWN C.C. THOMAS 21-JAN-89
CHK A. EMADI 27-JAN-88
APVD A. EMADI 27-JAN-88
PRODUCT SPEC —
APPLICATION SPEC —
WEIGHT –

Tyco Electronics
Tyco Electronics Corporation
Harrisburg, PA 17105-3608

NAME
PLUG ASSEMBLY
AMPLIMITE 21C4
SIZE 4, SERIES 109, COAX MIX

SIZE	CAGE CODE	DRAWING NO	RESTRICTED TO
A1	00779	C-212530	–

CUSTOMER DRAWING | SCALE 4:1 | SHEET 1 OF 1 | REV P

4805 (1/08)