# Filter-regulators - Series MX

Product code: MX3-1-FR0042



*Datasheet creation date: 19/05/2026 18:17*

*Check the most updated document online* click here

## TECHNICAL DATA

| | |
|---|---|
| **Series** | MX |
| **Size** | 3 |
| **PORTS (IN - OUT)** | 1 = G1 |
| **Filter-regulator** | FR |
| **Filtering element** | 0 = 25 µm with relieving (standard) |
| **Draining of condensate** | 0 = semiautomatic-manual drain (standard - only for polymer bowl) |
| **Operating pressure** | 4 = 0.5 ÷ 4 bar |
| **Pressure gauge** | 2 = with built-in pressure gauge 0-6 and working pressure 0.5 ÷ 4 bar |
| **Flow direction** | = from left to right (standard) |

Products designed for industrial applications. General terms and conditions for sale are available on www.camozzi.com.
This document contains a brief description of the products offered by Camozzi Automation at time of publication.
For more complete and up to date information about the Camozzi Automation product range, please refer to our online catalogue at https://shop.camozzi.com

# Filter-regulators - Series MX

Product code: MX3-1-FR0042

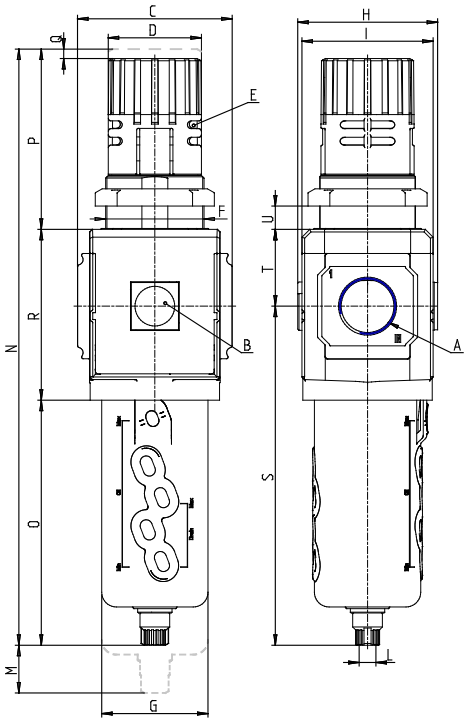


## DIMENSIONS

| | |
|---|---|
| **A** | G1 |
| **B (bar)** | 0-12 bar |
| **C (mm)** | 89.5 |
| **D (mm)** | 54 |
| **E (mm)** | Ø4 |
| **E2 (mm)** | 8.0 |
| **F (mm)** | M57x1.5 |
| **G (mm)** | 61.5 |
| **H (mm)** | 81.0 |
| **I (mm)** | 76 |
| **L** | G 1/8 |
| **M (mm)** | 95 |
| **N (mm)** | 345 |
| **O (mm)** | 142 |
| **P (mm)** | 104 |
| **Q (mm)** | 5 |
| **R (mm)** | 99 |
| **S (mm)** | 196.5 |
| **T (mm)** | 44.5 |
| **U (mm)** | 0÷20 |
| **Weight (kg)** | 1.3 |

Products designed for industrial applications. General terms and conditions for sale are available on www.camozzi.com.
This document contains a brief description of the products offered by Camozzi Automation at time of publication.
For more complete and up to date information about the Camozzi Automation product range, please refer to our online catalogue at https://shop.camozzi.com