S19PD09

HFC FRÄSER
HIGH FEED MILLING CUTTERS

PENTA HF

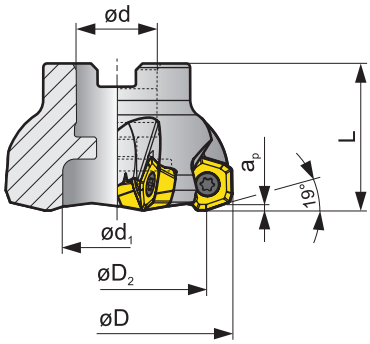

γ_p	10°	κ_r	19°
γ_f	-1° - -24°	$a_{p\,max}$	2 mm

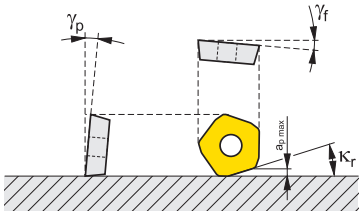

Z* - Anzahl Zähne / Number of teeth

Abmessungen [mm]. / Dimensions [mm].

ISO	Sortiment / Assortment	Abmessungen / Dimensions D	d	d_1	L	D_2	Z*						Kühlung Cooling	[kg]
42A03R-S19PD09-C	■	42	16	12	40	28	3						+	0,18
50A04R-S19PD09-C	■	50	22	18	40	36	4						+	0,23
52A04R-S19PD09-C	■	52	22	18	40	38	4						+	0,24
63A05R-S19PD09-C	■	63	22	18	40	49	5						+	0,31
66A06R-S19PD09-C	■	66	22	18	40	52	6						+	0,32
80A05R-S19PD09-C	■	80	27	37	50	66	5						+	0,83
100A06R-S19PD09-C	■	100	32	45	50	86	6						+	1,40
100A08R-S19PD09-C	■	100	32	45	50	86	8						+	1,38

PRAMET

● Lagersortiment / ○ Kein Lagersortiment, ■ Lagersortiment ab 1.04.2014 / □ Kein Lagersortiment ab 1.04.2014
● stocked as standard / ○ not stocked as standard, ■ stocked as standard from 1.4.2014 / □ not stocked as standard from 1.4.2014
Derzeitiges Lagerbestandssortiment ist abhängig von der gültigen Preisliste. / See price list for current availability.