

Image may differ from product. See technical specification for details.

7212 ACCBM

Single row angular contact ball bearing with 25° contact angle

These single row angular contact ball bearings, with 25° contact angle, accommodate radial and axial loads acting simultaneously, where the axial load acts in one direction only. They have Normal axial internal clearance and are suitable for universal matching, where two bearings can be arranged back-to-back or face-to-face. They have a ball-centred brass cage. They can operate at 20% higher speeds than equivalent bearings with 40° contact angle.

- 25° contact angle
- Brass cage
- Suitable for universal matching
- Can operate at very high speeds
- Accommodate relatively high radial loads and large unilateral axial loads

Overview

Dimensions

Bore diameter	60 mm
Outside diameter	110 mm
Width	22 mm
Contact angle	25 °

Performance

Basic dynamic load rating	69.5 kN
Basic static load rating	56 kN
Reference speed	7 500 r/min
Limiting speed	12 000 r/min
SKF performance class	SKF Explorer

Properties

Contact type	Normal contact (two-point contact)
Number of rows	1
Locating feature, bearing outer ring	Without
Ring type	One-piece inner and outer rings
Cage	Machined brass
Matched arrangement	No
Universal matching bearing	Yes
Axial internal clearance	Not applicable
Matched condition (axial clearance/ preload)	Axial clearance CB
Material, bearing	Bearing steel
Coating	Without
Sealing	Without
Lubricant	None
Relubrication feature	Without
Indicative carbon footprint for new product	3.1 kg CO_2e

Logistics

Product net weight	0.846 kg
eClass code	23-05-08-03
UNSPSC code	31171531

Technical specification

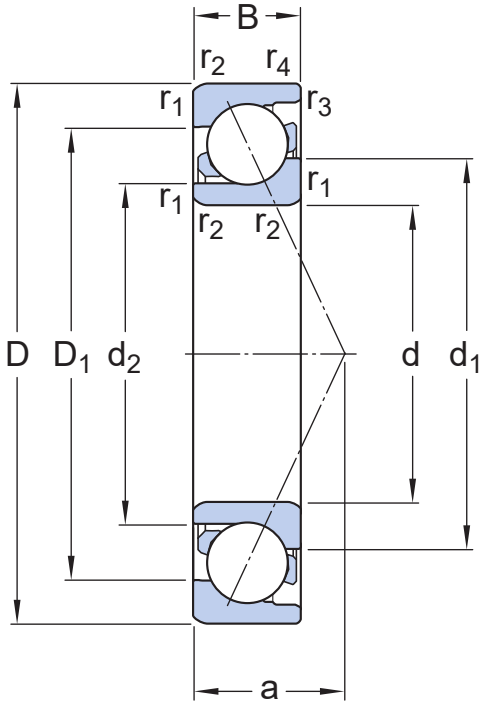

Dimensions

d	60 mm	Bore diameter
$t_{\Delta dmp}$	-0.012 – 0 mm	Deviation limits of mid-range bore diameter
D	110 mm	Outside diameter
$t_{\Delta Dmp}$	-0.013 – 0 mm	Deviation limits of mid-range outside diameter
B	22 mm	Width
$t_{\Delta Bs}$	-0.15 – 0 mm	Deviation limits of ring width
d_1	≈ 79.51 mm	Shoulder diameter of inner ring (large side face)
d_2	≈ 69.299 mm	Shoulder diameter of inner ring (small side face)
D_1	≈ 91.41 mm	Shoulder diameter of outer ring (large side face)
a	30 mm	Distance side face to pressure point
$r_{1,2}$	min. 1.5 mm	Chamfer dimension
$r_{3,4}$	min. 1 mm	Chamfer dimension
	P6	ISO tolerance class for dimensions

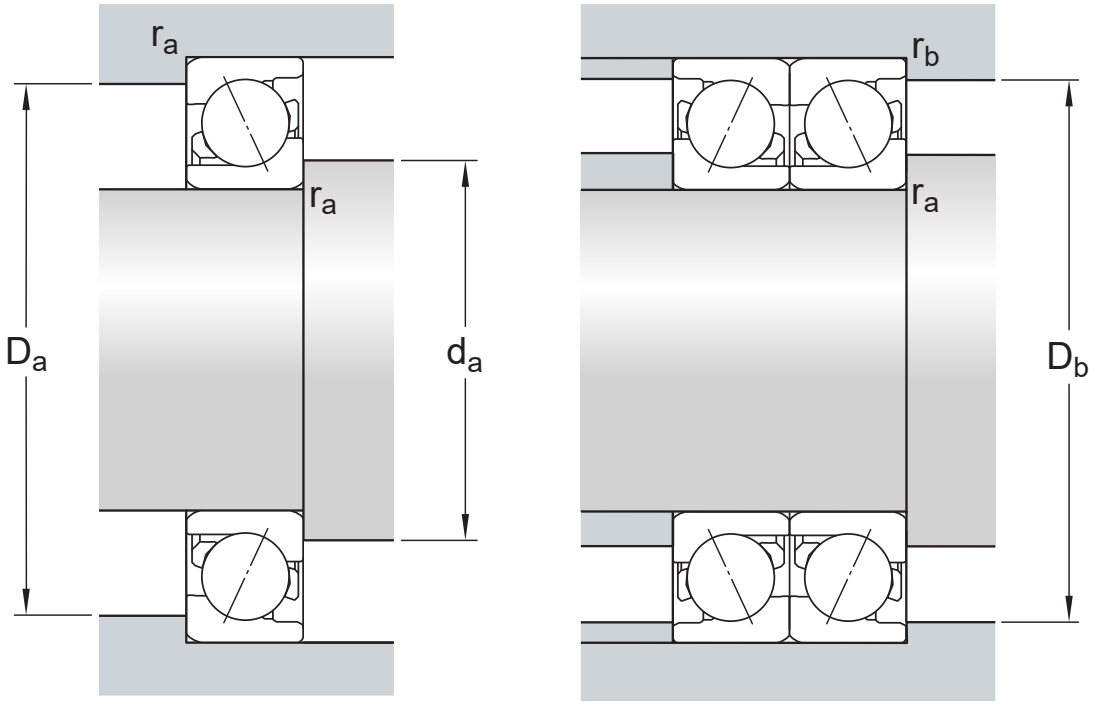

Abutment dimensions

d_a	min. 69 mm	Diameter of shaft abutment
D_a	max. 101 mm	Abutment diameter housing
D_b	max. 104 mm	Diameter of housing abutment
r_a	max. 1.5 mm	Radius of fillet
r_b	max. 1 mm	Radius of fillet

Calculation data

SKF performance class		SKF Explorer
Basic dynamic load rating	C	69.5 kN
Basic static load rating	C_0	56 kN
Fatigue load limit	P_u	2.36 kN
Reference speed		7 500 r/min
Limiting speed		12 000 r/min
Minimum axial load factor	A	0.01
Minimum radial load factor	k_r	0.095
Limiting value	e	0.68

SINGLE BEARING OR BEARING PAIR ARRANGED IN TANDEM

Calculation factor (single, tandem)	X	0.41
Calculation factor (single, tandem)	Y_0	0.38
Calculation factor (single, tandem)	Y_2	0.87

BEARING PAIR ARRANGED BACK-TO-BACK OR FACE-TO-FACE

Calculation factor (back-to-back, face-to-face)	X	0.67
Calculation factor (back-to-back, face-to-face)	Y_0	0.76
Calculation factor (back-to-back, face-to-face)	Y_1	0.92
Calculation factor (back-to-back, face-to-face)	Y_2	1.4

Tolerances of run-out

Range of section height at inner ring of assembled bearing	t_{Kia}	5 µm
Maximum run-out of inner ring side face to the bore	t_{Sd}	8 µm
Range of section height at outer ring of assembled bearing	t_{Kea}	10 µm
Perpendicularity of outer ring outside surface	t_{SD}	4.5 µm
ISO tolerance class for geometrical tolerances		P5

Tolerances and clearances

GENERAL BEARING SPECIFICATIONS

- Tolerances: Normal (metric), P6, P5, Normal (inch)
- Internal clearance: CA+CB+CC, G
- Preload: GA+GB+GC

BEARING INTERFACES

- Seat tolerances for standard conditions
- Tolerances and resultant fit

Terms of use

By accessing and using this website / app owned and published by AB SKF (publ.) (556007-3495 · Gothenburg) (“SKF”), you agree to the following terms and conditions:

Warranty Disclaimer and Limitation of Liability

Although every care has been taken to assure the accuracy of the information on this website / app, SKF provides this information "AS IS" and DISCLAIMS ALL WARRANTIES, EXPRESS OR IMPLIED, INCLUDING, BUT NOT LIMITED TO, IMPLIED WARRANTIES OF MERCHANTABILITY AND FITNESS FOR A PARTICULAR PURPOSE. You acknowledge that your use of this website / app is at your sole risk, that you assume full responsibility for all costs associated with use of this website / app, and that SKF shall not be liable for any direct, incidental, consequential, or indirect damages of any kind arising out of your access to, or use of the information or software made available on this website / app.

Any warranties and representations in this website / app for SKF products or services that you purchase or use will be subject to the agreed upon terms and conditions in the contract for such product or service.

Further, for non-SKF websites / apps that are referenced in our website / app or where a hyperlink appears, SKF makes no warranties concerning the accuracy or reliability of the information in these websites / apps and assumes no responsibility for material created or published by third parties contained therein. In addition, SKF does not warrant that this website / app or these other linked websites / apps are free from viruses or other harmful elements.

Third Party Services

When viewing YouTube content via the SKF website(s) (i.e. using YouTube API Services), you agree to be bound by the YouTube Terms of Service.

Copyright

Copyright in this website / app copyright of the information and software made available on this website / app rest with SKF or its licensors. All rights are reserved. All licensed material will reference the licensor that has granted SKF the right to use the material. The information and software made available on this website / app may not be reproduced, duplicated, copied, transferred, distributed, stored, modified, downloaded or otherwise exploited for any commercial use without the prior written approval of SKF. However, it may be reproduced, stored and downloaded for use by individuals without prior written approval of SKF. Under no circumstances may this information or software be supplied to third parties.

This website /app includes certain images used under license from Shutterstock, Inc.

Trademarks and Patents

All trademarks, brand names, and corporate logos displayed on the website / app are the property of SKF or its licensors, and may not be used in any way without prior written approval by SKF. All licensed trademarks published on this website / app reference the licensor that has granted SKF the right to use the trademark. Access to this website / app does not grant to the user any license under any patents owned by or licensed to SKF.

Changes

SKF reserves the right to make changes or additions to this website / app at any time.