Product Data Sheet

L-ALB 101K

Pressed steel swivel castor, medium duty design, with top plate fitting, heavy duty wheel, with Blickle Besthane® polyurethane tread, with aluminium wheel centre

EAN 4047526347987
ID 917933
Customs tariff number 87169090

Made in Germany

Bracket: L series
- pressed steel, zinc-plated, blue-passivated, Cr6-free
- double ball bearing in the swivel head
- strong central kingpin (from wheel Ø 150 mm)
- swivel head seal
- minimum swivel head play and smooth rolling characteristic and increased service life due to the special dynamic Blickle riveting process

Wheel: ALB series
- tread: high-quality polyurethane elastomer Blickle Besthane®, hardness 92 Shore A, colour brown, non-marking, non-staining
- wheel centre: die-cast aluminium, colour silver grey

Blickle Besthane®

Other features:
- high chemical resistance to many aggressive substances
- operating temperature: -20 °C to +70 °C, temporarily up to +90 °C, reduced load capacity over +40 °C
- With heavy-duty wheel centre, reinforced design

Tread and tyre hardness
92 Shore A

Rolling resistance
excellent

Wear resistance
excellent

Operating noise / floor surface preservation
good

Technical data:

Wheel Ø (D)		100 mm
Wheel width		40 mm
Load capacity at 4 km/h		250 kg
Load capacity (static)		625 kg
Bearing type		ball bearing
Total height (H)		125 mm
Mounting type		top plate
Plate size		100 x 85 mm
Bolt hole spacing		80 x 60 mm
Bolt hole Ø		9 mm
Offset (F)		35 mm
Temperature resistance min		-20 °C
Temperature resistance max		70 °C
Tread and tyre hardness		92 Shore A
Unit weight		1 kg
Non-marking		✓
Non-staining		✓
Antistatic		×
ESD		×
Electrically conductive		×
Corrosion-resistant		×
Heat-resistant		×

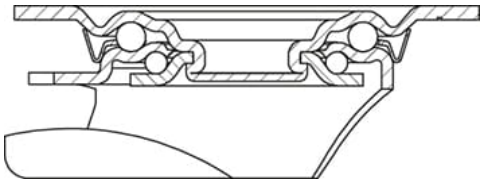

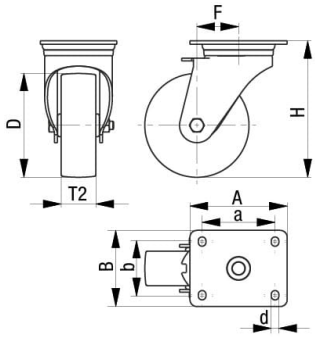

Tread hydrolysis-resistant		✓
Suitable for autoclaves		✕
Suitable for machine washing		✕

Product references

Corresponding standard locking L-ALB 101K-FI

Corresponding fixed castor B-ALB 101K

Wheel used ALB 101/15K