STRICTLY CONFIDENTIAL

SUBJECT TO NON-DISCLOSURE AGREEMENT

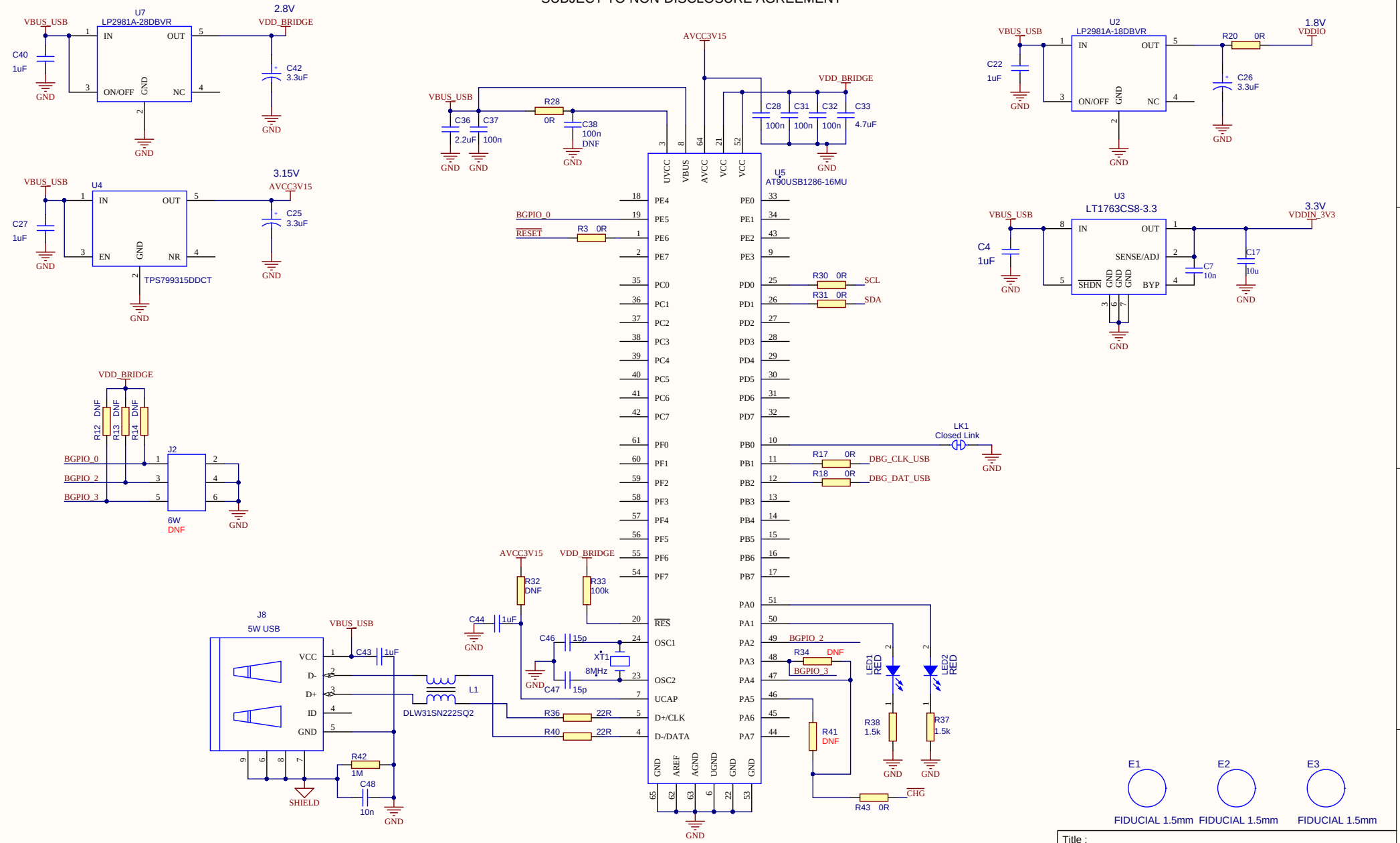

© 2017 Microchip Technology Inc - this drawing and its contents are strictly confidential and provided for INFORMATION PURPOSES ONLY.
Under NO circumstances should the drawing and its contents be copied. sold, transferred or reproduced in whole or part without the prior written consent of Microchip Technology.

Iss	Notes	ECN	Drn	Date
A1	Debug lines added, MCHP document format	N/A	PFC	15th May 2017
A0	First Issue	N/A	DC	1st June 2015

Filename : B-2860_2.SchDoc

Drn : Daniele Cecchinato

Sheet : 2 Of 2

Checked :

Approved :

CAD :

Title :
EVK Control Board

Number :
B-2860

Project :
mXT144U

MICROCHIP