Brand of NTN corporation

Technical data

ESPE210

Bearing units

Grey cast housing, radial insert ball bearing with eccentric locking collar, single lip seal

KIT CONTENT

ES210G2, PE210

VISUAL (S)

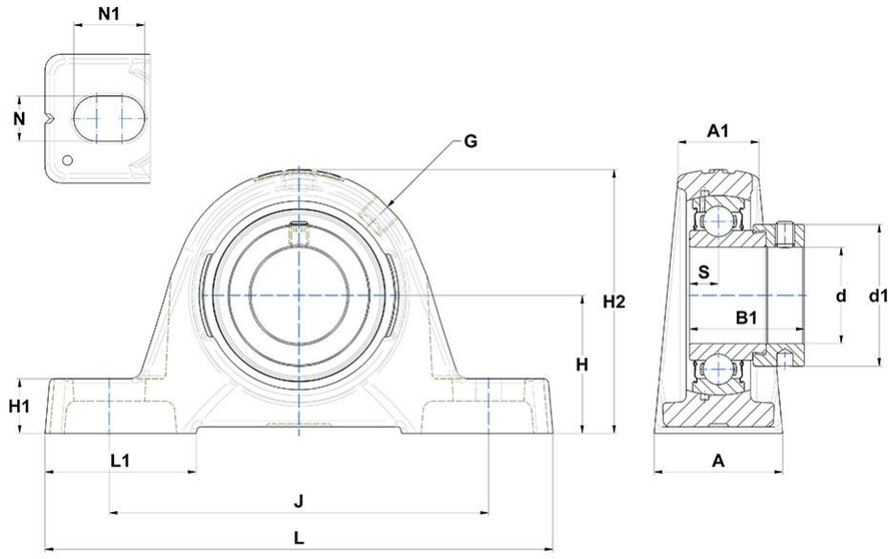

PRODUCT DEFINITION

Brand	SNR
A - Housing width	54 mm
A1 - Housing top width	34 mm
B - Width of Inner Ring	30,2 mm
d - Shaft diameter	50 mm
d1 - Outer dia of eccent. Lock. collar / nut of adapter sleeve	67,2 mm

PRODUCT DEFINITION	
G - Grease fitting	R1/8"
H - Distance mounting base to centerline spheric. seating diam.	57,2 mm
H1 - Housing foot height	21,5 mm
H2 - Housing height	115 mm
J - Mounting holes distance	158 mm
L - Housing length	200 mm
L1 - Housing foot length	61 mm
N - Mounting hole dimension	18 mm
N1 - Mounting hole length	23 mm
S - Distance front side/bearing centre	11 mm

PRODUCT PERFORMANCE	
C - Dynamic load rating	35100000 mN
C0 - Static load rating	23200000 mN
Operating temperature min.	253,15 °K
Operating temperature max.	373,15 °K

OTHER FEATURES	
Mass	2,6 kg
Recommended tightening torque for set screw	11.5 N-m