8mm X 5000mm HIGH OUTPUT LED RIBBON

Features

Voltage: 24V DC
LED Viewing Angle (2 θ 1/2): 120°
Standard Packaging:
5 Meter Reel (300 LED's)
Osram High Output LED's

Dimensions

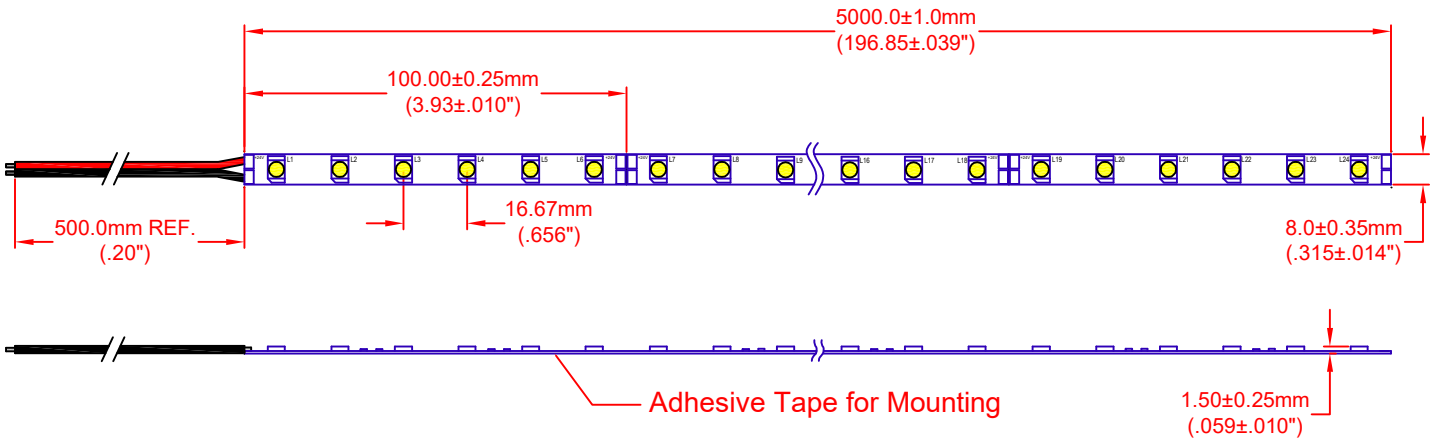

Electro-Optical Characteristics (T_J = 25°C)

Part Number	Color	Number of LEDs	InputVoltage (V DC)	Power (W)	Current +/- 20%	Radiance Angle (Deg.)	λd(nm)/ CCT(K)	Lumen Flux (lm)
ZFS-85000-24WW	Warm White	300	24	44.4	1.85	120	3000	4300

Note: Flux is measured with an accuracy of +/- 10%.

Maximum Ratings

Parameter	Symbol	Rating	Units
Operating Temperature	T_{opr}	-30 ~ +100	ºC
Storage Temperature	T_{stg}	-40 ~ +110	ºC

ATTENTION

OBSERVE PRECAUTION FOR HANDLING ELECTROSTATIC DISCHARGE SENSITIVE DEVICES

REV. NO.	DESCRIPTION/ECO NUMBER	APPV'D DATE
	RELEASE AND CANCEL PL-1901 MULTI	3/5/19

METRIC
THIRD ANGLE PROJECTION

DIMENSIONS ARE MILLIMETER (INCH)
TOLERANCE UNLESS OTHERWISE SPECIFIED
1 PL +/- REF.
2 PL +/- REF.
ANGLE +/- REF.

JKL COMPONENTS CORPORATION

TITLE: 8 X 5000mm LED FLEX RIBBON 24V HIGH OUTPUT

DRAWN BY	APPV'D BY	DATE	SIZE	FSCM NO.	DRAWING NO.
L. WENGSTROM	S.C.	3/5/19	A	55335	ZFS-85000-24WW

- CAD DRAWING -
MANUAL REVISIONS NOT PERMITTED

SCALE	RELEASED DATE	REVISION DATE	REV. NO.	SHEET
NONE	3/5/19			1 OF 1