

Image may differ from product. See technical specification for details.

# 23252 CCK/W33

## Spherical roller bearing with tapered bore and relubrication features

Spherical roller bearings can accommodate heavy loads in both directions. They are self-aligning and accommodate misalignment and shaft deflections, with virtually no increase in friction or temperature. The design includes features to facilitate relubrication. The bearings can be used in a modular system, including housings, sleeves and nuts. Also available on request with special sized bore and/or outside diameters, suitable for reworked shafts and housings.

- Accommodate misalignment
- High load carrying capacity
- Relubrication features
- Low friction and long service life
- Increased wear resistance

# Overview

## Dimensions

| | |
|---|---|
| Bore diameter | 260 mm |
| Outside diameter | 480 mm |
| Width | 174 mm |

## Performance

| | |
|---|---|
| Basic dynamic load rating | 3 395 kN |
| Basic static load rating | 4 750 kN |
| Reference speed | 850 r/min |
| Limiting speed | 1 200 r/min |
| SKF performance class | SKF Explorer |

## Properties

| | |
|---|---|
| Number of rows | 2 |
| Locating feature, bearing outer ring | Without |
| Bore type | Tapered 1:12 |
| Cage | Sheet metal |
| Radial internal clearance | CN |
| Tolerance class for dimensions | Normal |
| Tolerance class for run-out | P5 |
| Sealing | Without |
| Lubricant | None |
| Relubrication feature | With |
| Candidate for remanufacturing | Yes |
| Indicative carbon footprint for new product | 492 kg $CO_2e$ |
| Indicative carbon footprint for remanufactured product | 164 kg $CO_2e$ |

## Logistics

| | |
|---|---|
| Product net weight | 133 kg |
| eClass code | 23-05-09-11 |
| UNSPSC code | 31171510 |

# Technical specification

| | |
|---|---|
| Bore type | Tapered 1:12 |

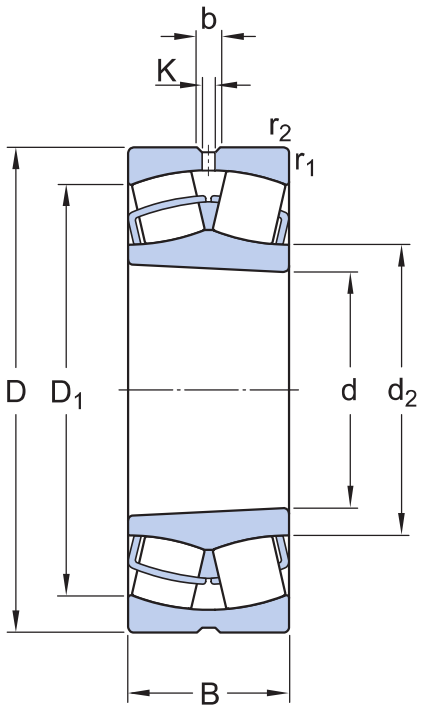


## Dimensions

| | | |
|---|---|---|
| d | 260 mm | Bore diameter |
| $t_{\Delta dmp}$ | 0 – 0.052 mm | Deviation limits of mid-range bore diameter |
| $t_{\Delta SL}$ | 0 – 0.052 mm | Deviation limits of tapered slope |
| D | 480 mm | Outside diameter |
| $t_{\Delta Dmp}$ | -0.045 – 0 mm | Deviation limits of mid-range outside diameter |
| B | 174 mm | Width |
| $t_{\Delta Bs}$ | -0.1 – 0 mm | Deviation limits of ring width |
| $d_2$ | ≈ 312 mm | Shoulder diameter of inner ring |
| $D_1$ | ≈ 408 mm | Shoulder/recess diameter of outer ring |
| b | 22.3 mm | Width of lubrication groove |
| K | 12 mm | Diameter of lubrication hole |
| $r_{1,2}$ | min. 5 mm | Chamfer dimension |
| | Normal | ISO tolerance class for dimensions |

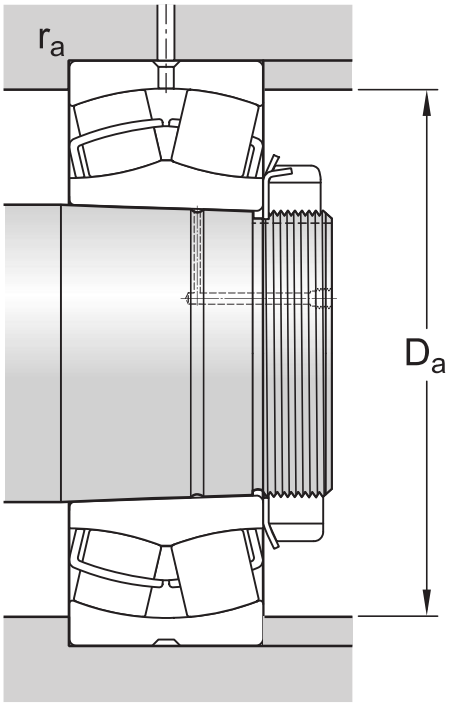


## Abutment dimensions

| | | |
|---|---|---|
| $D_a$ | max. 460 mm | Diameter of housing abutment |
| $r_a$ | max. 4 mm | Radius of fillet |

## Calculation data

| | | |
|---|---|---|
| SKF performance class | | SKF Explorer |
| Basic dynamic load rating | C | 3 395 kN |
| Basic static load rating | $C_0$ | 4 750 kN |
| Fatigue load limit | $P_u$ | 360 kN |
| Reference speed | | 850 r/min |
| Limiting speed | | 1 200 r/min |
| Limiting value | e | 0.35 |
| Calculation factor | $Y_1$ | 1.9 |
| Calculation factor | $Y_2$ | 2.9 |
| Calculation factor | $Y_0$ | 1.8 |

## Tolerances of run-out

| | | |
|---|---|---|
| Range of section height at inner ring of assembled bearing | $t_{Kia}$ | 13 µm |

| | | |
|---|---|---|
| Maximum run-out of inner ring side face to the bore | $t_{Sd}$ | 13 µm |
| Range of section height at outer ring of assembled bearing | $t_{Kea}$ | 23 µm |
| Perpendicularity of outer ring outside surface | $t_{SD}$ | 7.5 µm |
| ISO tolerance class for geometrical tolerances | | P5 |

## Radial internal clearance

| | |
|---|---|
| Minimum initial clearance | 220 µm |
| Maximum initial clearance | 300 µm |

## Tolerances and clearances

### GENERAL BEARING SPECIFICATIONS

- Tolerances: Normal, P6, P5, tapered bore 1:12, tapered bore 1:30
- Radial internal clearance: cylindrical bore, tapered bore

### BEARING INTERFACES

- Seat tolerances for standard conditions
- Tolerances and resultant fit

# Compatible products

## Recommended product

| | |
|---|---|
| Withdrawal sleeve, for oil injection, ISO standards | AOH 2352 G |
| Adapter sleeve for oil injection mounting with HM .. T lock nut and MB lock washer, metric dimensions | OH 2352 H |

# Terms of use

By accessing and using this website / app owned and published by AB SKF (publ.) (556007-3495 · Gothenburg) (“SKF”), you agree to the following terms and conditions:

### Warranty Disclaimer and Limitation of Liability

Although every care has been taken to assure the accuracy of the information on this website / app, SKF provides this information "AS IS" and DISCLAIMS ALL WARRANTIES, EXPRESS OR IMPLIED, INCLUDING, BUT NOT LIMITED TO, IMPLIED WARRANTIES OF MERCHANTABILITY AND FITNESS FOR A PARTICULAR PURPOSE. You acknowledge that your use of this website / app is at your sole risk, that you assume full responsibility for all costs associated with use of this website / app, and that SKF shall not be liable for any direct, incidental, consequential, or indirect damages of any kind arising out of your access to, or use of the information or software made available on this website / app.

Any warranties and representations in this website / app for SKF products or services that you purchase or use will be subject to the agreed upon terms and conditions in the contract for such product or service.

Further, for non-SKF websites / apps that are referenced in our website / app or where a hyperlink appears, SKF makes no warranties concerning the accuracy or reliability of the information in these websites / apps and assumes no responsibility for material created or published by third parties contained therein. In addition, SKF does not warrant that this website / app or these other linked websites / apps are free from viruses or other harmful elements.

### Third Party Services

When viewing YouTube content via the SKF website(s) (i.e. using YouTube API Services), you agree to be bound by the YouTube Terms of Service.

### Copyright

Copyright in this website / app copyright of the information and software made available on this website / app rest with SKF or its licensors. All rights are reserved. All licensed material will reference the licensor that has granted SKF the right to use the material. The information and software made available on this website / app may not be reproduced, duplicated, copied, transferred, distributed, stored, modified, downloaded or otherwise exploited for any commercial use without the prior written approval of SKF. However, it may be reproduced, stored and downloaded for use by individuals without prior written approval of SKF. Under no circumstances may this information or software be supplied to third parties.

This website /app includes certain images used under license from Shutterstock, Inc.

### Trademarks and Patents

All trademarks, brand names, and corporate logos displayed on the website / app are the property of SKF or its licensors, and may not be used in any way without prior written approval by SKF. All licensed trademarks published on this website / app reference the licensor that has granted SKF the right to use the trademark. Access to this website / app does not grant to the user any license under any patents owned by or licensed to SKF.

### Changes

SKF reserves the right to make changes or additions to this website / app at any time.